July 1999

Environmental Technology Verification Report

Paint Overspray Arrestor
ATI
A-3000 5P Bag

Prepared by

Research Triangle Institute

Under a Cooperative Agreement with

U.S. Environmental Protection Agency

ETV ETV ETV

July 1999

Environmental Technology Verification Report

Paint Overspray Arrestor

ATI
A-3000 5P Bag

Prepared by

Kathleen Owen
James Hanley
Jack Farmer
Air Pollution Control Technology Program
Research Triangle Institute
Research Triangle Park, NC 27709-2194

EPA Cooperative Agreement CR 826152-01-1

EPA Project Officer: Theodore G. Brna
Air Pollution Prevention and Control Division
National Risk Management Research Laboratory
Research Triangle Park, NC 27711

Notice

This document was prepared by the Research Triangle Institute (RTI) under Cooperative Agreement No. CR826152-01-1 with the U.S. Environmental Protection Agency (EPA). The document has been subjected to EPA's peer and administrative reviews and has been approved for publication. Mention of corporation names, trade names, or commercial products does not constitute endorsement or recommendation for use of specific products.

UNITED STATES ENVIRONMENTAL PROTECTION AGENCY

Office of Research and Development

Washington, D.C. 20460

ENVIRONMENTAL TECHNOLOGY VERIFICATION PROGRAM

VERIFICATION STATEMENT

TECHNOLOGY TYPE:	**PAINT OVERSPRAY ARRESTOR**		
APPLICATION:	**CONTROL OF PARTICLE EMISSIONS FROM AEROSPACE PAINT SPRAYING FACILITIES**		
TECHNOLOGY NAME:	**A-3000 5P Bag**		
COMPANY:	**ATI**		
ADDRESS:	**205 W. 17th St. Ottawa, Kansas 66067**	**PHONE: FAX:**	**(785) 242-1811 (785) 242-8700**
WEB SITE:	**http:\\www.ati-filters.com**		
EMAIL:	**ati@ati-filters.com**		

PROGRAM DESCRIPTION

The U.S. Environmental Protection Agency (EPA) has created the Environmental Technology Verification (ETV) Program to facilitate the deployment of innovative or improved environmental technologies through performance verification and dissemination of information. The goal of the ETV Program is to further environmental protection by substantially accelerating the acceptance and use of improved and cost-effective technologies. ETV seeks to achieve this goal by providing high quality, peer reviewed data on technology performance to those involved in the design, distribution, financing, permitting, purchase, and use of environmental technologies.

ETV works in partnership with recognized standards and testing organizations, stakeholder groups which consist of buyers, vendor organizations and permitters, and with the full participation of individual technology developers. The program evaluates the performance of innovative technologies by developing test plans that are responsive to the needs of stakeholders, conducting field or laboratory tests (as appropriate), collecting and analyzing data, and preparing peer reviewed reports. All evaluations are conducted in accordance with rigorous quality assurance protocols to ensure that data of known and adequate quality are generated and that the results are defensible.

The Air Pollution Control Technology (APCT) program, one of 12 technology areas under ETV, is operated by the Research Triangle Institute (RTI), in cooperation with EPA's National Risk Management Research Laboratory. APCT has recently evaluated the performance of paint overspray arrestors used primarily in the aerospace industry. This verification statement provides a summary of the test results for the ATI A-3000 5P Bag.

VERIFICATION TEST DESCRIPTION

All tests were performed in accordance with the APCT "Generic Verification Protocol for Paint Overspray Arrestors." The protocol incorporates all requirements of EPA Method 319: Determination of Filtration Efficiency for Paint Overspray Arrestors. [Method 319 is part of the National Emission Standards for Hazardous Air Pollutants (NESHAP) for Aerospace Manufacturing and Rework Facilities and was published in the *Federal Register* on March 27, 1998 (40 CFR Part 63).] The protocol also includes requirements for quality management, quality assurance, procedures for product selection, auditing of the test laboratories, and test reporting format.

Filtration efficiency is computed from aerosol concentrations measured upstream and downstream of an arrestor installed in a laboratory test rig. The aerosol concentrations upstream and downstream of the arrestor are measured with an aerosol analyzer that simultaneously counts and sizes the particles in the aerosol stream. The aerosol analyzer covers the particle diameter size range from 0.3 to 10 µm in a series of contiguous sizing channels. Each sizing channel covers a narrow range of particle diameters. By taking the ratio of the downstream to upstream counts on a channel by channel basis, the filtration efficiency is computed for each of the sizing channels.

The following series of tests were performed at a face velocity of 120 fpm (0.61 m/s):

- Three arrestors were tested using a liquid-phase aerosol challenge,
- Three arrestors were tested using a solid-phase aerosol challenge,
- Six "no-filter" control tests (one performed prior to each arrestor test),
- One high efficiency particulate air (HEPA) filter control test, and
- One reference filter control test.

TECHNOLOGY DESCRIPTION

The ATI A-3000 5P Bag arrestor is a five-pocket bag filter with nominal dimensions of 24 x 24 x 12 in. (0.61 x 0.61 x 0.30 m). The arrestor has an internal ring support, and the filter media color is white on the upstream side and yellow on the downstream side. The label is white, 1½ x 2 3/8 in. (3.81 x 6.03 cm) in size, and is stapled to the upper corner of the arrestor. The label includes the following information: ATI, A Clarcor Company, Dec. 98, A-3000 5P Bag, 24 x 24 x 12 in. (0.61 x 0.61 x 0.30 m), 5-P. There is no label indication of the flow direction or filter orientation, so the industry standard orientation with the bags extended horizontally in the direction of the airflow and the individual bags side-by-side, as opposed to stacked vertically, was used in the tests.

VERIFICATION OF PERFORMANCE

Verification testing of the arrestor was performed from March 24 through 25, 1999, at the test facilities of RTI. For ready comparison, the filtration efficiency requirements of the NESHAP are tabulated with the test results in Tables 1 through 4. The test results indicate that the tested arrestor exceeded the requirements listed in Tables 1 and 2 for existing sources and those listed in Tables 3 and 4 for new sources. The pressure drop across the tested arrestors at 120 fpm (0.61 m/s) ranged from 0.27 to 0.34 in. H_2O (67 to 85 Pa) for the six arrestors tested.

The APCT quality assurance officer has reviewed the test results and the quality control data and has concluded that the data quality objectives given in the generic verification protocol have been attained.

This verification statement addresses two aspects of paint overspray arrestor performance: filtration efficiency and pressure drop. Users of this technology may wish to consider other performance parameters such as service life and cost when selecting a paint overspray arrestor for their use.

In accordance with the generic verification protocol, this verification statement is valid for 12 months after the publication date 8/11/99.

Paint Overspray Arrestor Brand/Model: ATI A-3000 5P Bag

TABLE 1. EXISTING SOURCES*:

LIQUID-PHASE CHALLENGE AEROSOL PARTICLES

Aerodynamic particle diameter range, µm	Filtration efficiency requirement, %	Filtration efficiency achieved, %
> 5.7	> 90	>99
> 4.1	> 50	>99
> 2.2	> 10	99

TABLE 2. EXISTING SOURCES*:

SOLID-PHASE CHALLENGE AEROSOL PARTICLES

Aerodynamic particle diameter range, µm	Filtration efficiency requirement, %	Filtration efficiency achieved, %
> 8.1	> 90	>99
> 5.0	> 50	>99
> 2.6	> 10	99

TABLE 3. NEW SOURCES*:

LIQUID-PHASE CHALLENGE AEROSOL PARTICLES

Aerodynamic particle diameter range, µm	Filtration efficiency requirement, %	Filtration efficiency achieved, %
> 2.0	> 95	99
> 1.0	> 80	87
> 0.42	> 65	74

TABLE 4. NEW SOURCES*:

SOLID-PHASE CHALLENGE AEROSOL PARTICLES

Aerodynamic particle diameter range, µm	Filtration efficiency requirement, %	Filtration efficiency achieved, %
> 2.5	> 95	99
> 1.1	> 85	94
> 0.70	> 75	88

*A new source is any affected source that commenced construction after October 29, 1996.
An existing source is any affected source that is not new.

Original Signed By
E. Timothy Oppelt
7/27/99

E. Timothy Oppelt Date
Director
National Risk Management Research Laboratory
Office of Research and Development
United States Environmental Protection Agency

Original Signed By
Jack R. Farmer
7/29/99

Jack R. Farmer Date
Program Manager,
Air Pollution Control Technology Program
Research Triangle Institute

NOTICE: EPA verifications are based on an evaluation of technology performance under specific, predetermined criteria and the appropriate quality assurance procedures. EPA and RTI make no expressed or implied warranties as to the performance of the technology and do not certify that a technology will always operate as verified. The end user is solely responsible for complying with any and all applicable federal, state, and local requirements. Mention of commercial product names does not imply endorsement.

Availability of Verification Statement and Report

Copies of the public Verification Statement and Verification Report are available from the following:

1. **Research Triangle Institute**
   P.O. Box 12194
   Research Triangle Park, NC 27709-2194

   Web site: http://etv.rti.org/apct/index.html
   or http://www.epa.gov/etv *(click on partners)*

2. **USEPA / APPCD**
   MD-4
   Research Triangle Park, NC 27711

   Web site: http://www.epa.gov/etv/library.htm *(electronic copy)*
   http://www.epa.gov/ncepihom/

Abstract

Paint overspray arrestors (POAs) were evaluated by the Air Pollution Control Technology (APCT) pilot of the Environmental Technology Verification (ETV) Program. The performance factor verified was the particle filtration efficiency as a function of size for particles smaller than 10 µm. The APCT ETV Program developed a generic verification protocol for testing filtration efficiency that is based on EPA Method 319. The protocol was developed by RTI, reviewed by a technical panel of experts, and approved by EPA. The protocol addresses several issues that Method 319 does not cover, including periodic testing, acquisition of POAs for testing, and product definition. A Test/Quality Assurance Plan was prepared which addresses the test procedure and quality assurance and quality control requirements for obtaining verification data of sufficient quantity and quality to satisfy the data quality objectives.

RTI performed tests on ATI's A-3000 5P Bag during the period March 24-25, 1999. Filter efficiencies were determined. For ready comparison, the filtration efficiency requirements of the National Emission Standards for Hazardous Air Pollutants (NESHAP) are tabulated with the test results. The results indicate that the A-3000 5P Bag exceeded the NESHAP requirements for new and existing sources.

Table of Contents

Page

Notice ii

Verification Statement iii

Availability of Verification Statement and Report vii

Abstract viii

List of Figures x

List of Tables x

List of Abbreviations and Acronyms xi

Acknowledgments xii

Section 1. Introduction 1

Section 2. Verification Test Description 1
2.1. Selection of Tested Paint Overspray Arrestors 3

Section 3. Description of Arrestor 3

Section 4. Verification of Performance 3
4.1. Quality Assurance 3
4.2. Results 4
4.3. Limitations 4

Section 5. References 4

Appendix A. Description of the Test Rig and Methodology A-1

Appendix B. Certificates of Calibration B-1

Appendix C. Fractional Efficiency Data Sheets C-1

List of Figures

Page

Figure 1. Triplicate solid-phase particle removal efficiency curves for ATI A-3000 5P Bag paint overspray arrestor. 7

Figure 2. Average of the solid-phase particle removal efficiency curves for ATI A-3000 5P Bag paint overspray arrestor. 8

Figure 3. Triplicate liquid-phase particle removal efficiency curves for ATI A-3000 5P Bag paint overspray arrestor 9

Figure 4. Average of the liquid-phase particle removal efficiency curves for ATI A-3000 5P Bag paint overspray arrestor 10

List of Tables

Table 1. Test Series 2

Table 2. Summary of Solid-Phase Test Results 5

Table 3. Summary of Liquid-Phase Test Results 6

Table 4. Summary of Pressure Drop Measurements 11

Table 5. Existing Sources: Liquid-Phase Challenge Aerosol Particles 12

Table 6. Existing Sources: Solid-Phase Challenge Aerosol Particles 12

Table 7. New Sources: Liquid-Phase Challenge Aerosol Particles 12

Table 8. New Sources: Solid-Phase Challenge Aerosol Particles 12

List of Abbreviations and Acronyms

APCT	Air Pollution Control Technology
APPCD	Air Pollution Prevention and Control Division
cfm	cubic feet per minute
cm	centimeter
DQO	data quality objective
EPA	U.S. Environmental Protection Agency
ETV	Environmental Technology Verification
ETVR	Environmental Technology Verification Report
fpm	feet per minute
HEPA	high efficiency particulate air
in.	inch
mm	millimeter
m/s	meters per second
NESHAP	National Emission Standards for Hazardous Air Pollutants
Pa	pascal
POA	paint overspray arrestor
QA	quality assurance
RTI	Research Triangle Institute
µm	micrometer

Acknowledgments

RTI acknowledges the support of all those who helped plan and conduct the verification activities. In particular, we would like to thank Ted Brna, EPA Project Manager, and Paul Groff, EPA Project Quality Manager, of EPA's National Risk Management Research Laboratory in Research Triangle Park, NC. Finally we would like to acknowledge the assistance and participation of Alan Steiden of ATI.

For more information on the Paint Overspray Arrestor Verification Testing, contact

James Hanley
Research Triangle Institute
P.O. Box 12194
Research Triangle Park, NC 27709-2194
919-541-5811

For more information on the ATI A-3000 5P Bag, contact

Alan Steiden
ATI
205 W. 17th St.
Ottawa, Kansas 66067
785-242-1811

SECTION 1
INTRODUCTION

The U. S. Environmental Protection Agency (EPA) has created the Environmental Technology Verification (ETV) Program to facilitate the deployment of innovative or improved technologies through performance verification and information dissemination. The ETV Program is intended to assist and inform those involved in the design, distribution, permitting, and purchase of environmental technologies.

The U.S. EPA's partner in the Air Pollution Control Technology (APCT) Program is Research Triangle Institute (RTI). The APCT Program, with the full participation of the technology developer, develops plans, conducts tests, collects and analyzes data, and reports findings. The evaluations are conducted according to a rigorous protocol and quality assurance and quality control oversight. The APCT Program verifies the performance of commercial-ready technologies used to control air pollutant emissions, with an emphasis on technologies for controlling particulate matter, volatile organic compounds, nitrogen oxides, and hazardous air pollutants. The Program develops standardized verification protocols and test plans, conducts independent testing of technologies, and prepares verification test reports and statements for broad dissemination.

SECTION 2
VERIFICATION TEST DESCRIPTION

The paint overspray arrestor was tested in accordance with the APCT "Generic Verification Protocol for Paint Overspray Arrestors"[1] and the "Test/QA Plan for Paint Overspray Arrestors."[2] This protocol incorporates all requirements of EPA Method 319: Determination of Filtration Efficiency for Paint Overspray Arrestors. Method 319[3] is part of the National Emission Standards for Hazardous Air Pollutants (NESHAP) for Aerospace Manufacturing and Rework Facilities.[4] The protocol also includes requirements for quality management, quality assurance, procedures for product selection, auditing of the test laboratories, and reporting format.

Filtration efficiency was computed from aerosol concentrations measured upstream and downstream of an arrestor installed in a laboratory test rig. The aerosol concentrations upstream and downstream of the arrestors were measured with an aerosol analyzer that simultaneously counts and sizes the particles in the aerosol stream. The aerosol analyzer covered the particle diameter size range from 0.3 to 10 µm in a series of contiguous sizing channels. Each sizing channel covered a narrow range of particle diameters. For example, channel 1 may cover from 0.3 to 0.4 µm, channel 2 from 0.4 to 0.5 µm, and channel 15 from 7 to 10 µm. By taking the ratio of the downstream to upstream counts on a channel by channel basis, the filtration efficiency was computed for each of the sizing channels.

The upstream and downstream aerosol measurements were made while a test aerosol was injected into the air stream upstream of the arrestor [ambient aerosol is removed with high efficiency particulate air (HEPA) filters on the inlet of the test rig]. This test aerosol spanned the particle size range from 0.3 to 10 µm and provided a sufficient upstream concentration in each of the sizing channels to allow accurate calculation of filtration efficiencies up to 99%.

The following series of tests were performed at a face velocity of 120 fpm (0.61 m/s):

- Three arrestors were tested using a liquid-phase aerosol challenge,
- Three arrestors were tested using a solid-phase aerosol challenge,

- C “No-filter” control tests (one performed prior to each arrestor test) ,
- C One HEPA filter control test, and
- C One reference filter control test.

The test series is exhibited in Table 1. Additional details on the test procedure are provided in Appendix A.

TABLE 1. TEST SERIES

RTI Test No.	TYPE OF TEST				Challenge Aerosol
	No-Filter	Test Arrestor	HEPA Filter	Reference Filter	
03249908	X				Solid-Phase
03249909				X	
03249910	X				
03249911		X			
03259901	X				
03259902		X			
03259903	X				
03259904		X			
03199907			X		
03259905	X				Liquid-Phase
03259906		X			
03259907	X				
03259908		X			
03259909	X				
03259910		X			

2.1 SELECTION OF TESTED PAINT OVERSPRAY ARRESTORS

The test arrestors (A-3000 5P Bag) were supplied to the test laboratory directly from the manufacturer (ATI) with a letter signed by Alan Steiden, National Sales Manager, attesting that the arrestors were selected in an unbiased manner from a minimum of 100 similar arrestors and have not been treated in any manner different from the arrestors they offer to the public. The manufacturer supplied the test laboratory with 18 arrestors; from these 18, the test laboratory randomly selected six for testing.

SECTION 3
DESCRIPTION OF ARRESTOR

The ATI A-3000 5P Bag arrestor is a five-pocket bag filter with nominal dimensions of 24 x 24 x 12 in. (0.61 x 0.61 x 0.30 m). The arrestor has an internal ring support, and the filter media color is white on the upstream side and yellow on the downstream side. The label is white, 1½ x 2 3/8 in. (3.81 x 6.03 cm) in size, and is stapled to the upper corner of the arrestor. The label includes the following information: ATI, A Clarcor Company, Dec. 98, A-3000 5P Bag, 24 x 24 x 12 in. (0.61 x 0.61 x 0.30 m), 5-P. There is no label indication of the flow direction or filter orientation, so the industry standard orientation with the bags extended horizontally in the direction of the airflow and the individual bags side-by-side, as opposed to stacked vertically, was used in the tests.

SECTION 4
VERIFICATION OF PERFORMANCE

4.1 QUALITY ASSURANCE

The verification tests were conducted in accordance with an approved Test/Quality Assurance (QA) Plan.[2] As part of the Test/QA Plan, periodic audits are performed of the testing laboratory to ensure compliance with Method 319 facilities, equipment, and procedures. Additionally, the test results were reviewed by APCT personnel to ensure they met data quality objectives of Method 319, the Test Protocol, and the Test/QA Plan. Certificates of Calibration for the optical particle counter and the airflow reference device are provided in Appendix B.

4.2 RESULTS

Tables 2 and 3, and Figures 1 through 4, summarize the fractional filtration efficiency measurements for the solid- and liquid-phase tests, respectively. Upstream and downstream particle count data for each test are provided in Appendix C.

The initial (new condition) pressure drop across each test arrestor at the 120 fpm (0.61 m/s) test velocity [for a flowrate of 480 cfm (0.23 m^3/s)] is shown in Table 4. This pressure drop ranged from 0.27 to 0.34 in. H_2O (67 to 85 Pa) for the six arrestors tested.

Tables 5-8 present the filtration efficiency requirements of the Aerospace NESHAP and the corresponding efficiencies measured for the tested arrestor system. The test results indicate that the tested arrestor exceeded the requirements listed in Tables 5 and 6 for existing sources and those listed in Tables 7 and 8 for new sources.

4.3 LIMITATIONS

This verification report addresses two aspects of paint overspray arrestor performance: filtration efficiency and pressure drop. Users of this technology may wish to consider other performance parameters such as service life and cost when selecting a paint overspray arrestor for their use.

In accordance with the generic verification protocol, this verification report and the associated verification statement are valid for 12 months after the publication date.

SECTION 5
REFERENCES

1. Generic Verification Protocol for Paint Overspray Arrestors, Research Triangle Institute, Research Triangle Park, NC, October 1998.

2. Test/QA Plan for Paint Overspray Arrestors, Research Triangle Institute, Research Triangle Park, NC, February 1999.

3. Method 319: Determination of Filtration Efficiency for Paint Overspray Arrestors. *Code of Federal Regulations*, Appendix A to 40 CFR Part 63.

4. National Emission Standards for Hazardous Air Pollutants for Aerospace Manufacturing and Rework Facilities. *Code of Federal Regulations*, Title 40, Part 63, Subpart GG (40 CFR 63.741).

TABLE 2. SUMMARY OF SOLID-PHASE TEST RESULTS

Filtration Efficiency (%) at Indicated Size Range

OPC Channel Number		1	2	3	4	5	6	7	8	9	10	11	12	13	14	15
Min. Diam. (um)		0.45	0.59	0.73	0.80	1.02	1.44	1.86	2.28	2.85	3.13	4.25	5.66	7.07	7.77	9.88
Max. Diam. (um)		0.59	0.73	0.80	1.02	1.44	1.86	2.28	2.85	3.13	4.25	5.66	7.07	7.77	9.88	14.10
Geo. Mean Diam (um)		0.52	0.66	0.77	0.90	1.21	1.64	2.06	2.55	2.98	3.65	4.91	6.33	7.41	8.76	11.81
ATI A3000																
Run #1	03249911	83	86	89	91	94	96	98	99	100	100	100	100	100	100	100
Run #2	03259902	82	85	89	91	94	96	98	99	100	100	100	100	100	100	100
Run #3	03259904	88	91	93	94	97	98	99	99	100	100	100	100	100	100	100
Average		84	87	90	92	95	97	98	99	100	100	100	100	100	100	100

Interpolated Efficiency Values (%) for Two-Stage Criteria:

2.60 um (> 10% required):	99
5.00 um (> 50% required):	100
8.10 um (> 90% required):	100

Interpolated Efficiency Values (%) for Three-Stage Criteria:

0.70 um (> 75% required):	88
1.10 um (> 85% required):	94
2.50 um (> 95% required):	99

HEPA Filter Control Test (applicable to both solid and liquid phase conditions)

Run #1	03199907	100	100	100	100	100	100	100	100	100	100	100	100	100	100	100
Reference Filter QA Test																
Current	03249909	1	3	6	6	9	18	27	46	63	77	90	93	93	93	93
Baseline	03189903	1	3	4	5	8	15	26	44	61	75	90	94	94	95	95
Difference		0	0	2	1	1	2	1	3	2	1	0	-1	-1	-2	-2
Acceptable (< 10%)		yes	yes	yes	yes	yes	yes	yes	yes	yes	yes	yes	yes	yes	yes	yes

"No Filter" Control Tests		Penetration For Each Size Range														
Run #1	03249911	1.00	1.00	1.01	1.00	1.01	1.00	0.99	1.01	1.03	1.04	1.04	1.04	0.99	0.94	0.94
Run #2	03259901	1.01	1.01	1.00	1.00	1.01	1.01	1.01	1.01	0.99	1.02	1.03	1.00	1.05	0.98	0.94
Run #3	03259903	1.00	1.00	1.00	1.00	1.01	1.02	1.00	1.02	1.01	1.02	1.04	1.01	0.99	0.96	0.97

TABLE 3. SUMMARY OF LIQUID- PHASE TEST RESULTS

Filtration Efficiency (%) at Indicated Size Range

OPC Channel Number		1	2	3	4	5	6	7	8	9	10	11	12	13	14	15
Min. Diam. (um)		0.28	0.37	0.47	0.52	0.66	0.94	1.22	1.51	1.88	2.07	2.83	3.77	4.71	5.18	6.60
Max. Diam. (um)		0.37	0.47	0.52	0.66	0.94	1.22	1.51	1.88	2.07	2.83	3.77	4.71	5.18	6.60	9.43
Geo. Mean Diam (um)		0.32	0.418	0.49	0.58	0.78	1.07	1.36	1.68	1.97	2.42	3.26	4.21	4.94	5.85	7.89
ATI A3000																
Run #1	03259906	73	76	79	81	86	90	95	98	99	100	100	100	100	100	100
Run #2	03259908	69	72	75	77	82	87	93	97	99	99	100	100	100	100	100
Run #3	03259910	70	73	75	77	83	88	93	97	99	99	100	100	100	100	100
Average		71	74	76	78	84	89	94	98	99	99	100	100	100	100	100

Interpolated Efficiency Values (%) for Two-Stage Criteria:

2.20 um (> 10% required):	99
4.10 um (> 50% required):	100
5.70 um (> 90% required):	100

Interpolated Efficiency Values (%) for Three-Stage Criteria:

0.42 um (> 65% required):	74
1.00 um (> 80% requried):	87
2.00 um (> 95% required):	99

"No Filter" Control Tests		Penetration For Each Size Range														
Run #1	03259905	1.00	1.00	1.00	1.00	1.01	1.00	1.01	1.00	1.01	1.02	1.04	1.04	1.05	1.01	1.01
Run #2	03259907	1.00	0.99	1.00	0.99	1.00	1.00	1.01	1.00	1.02	1.02	1.05	1.06	1.03	1.04	1.01
Run #3	03259909	0.99	1.00	0.99	1.00	1.00	1.00	1.01	1.00	1.01	1.01	1.05	1.05	1.02	1.03	0.97

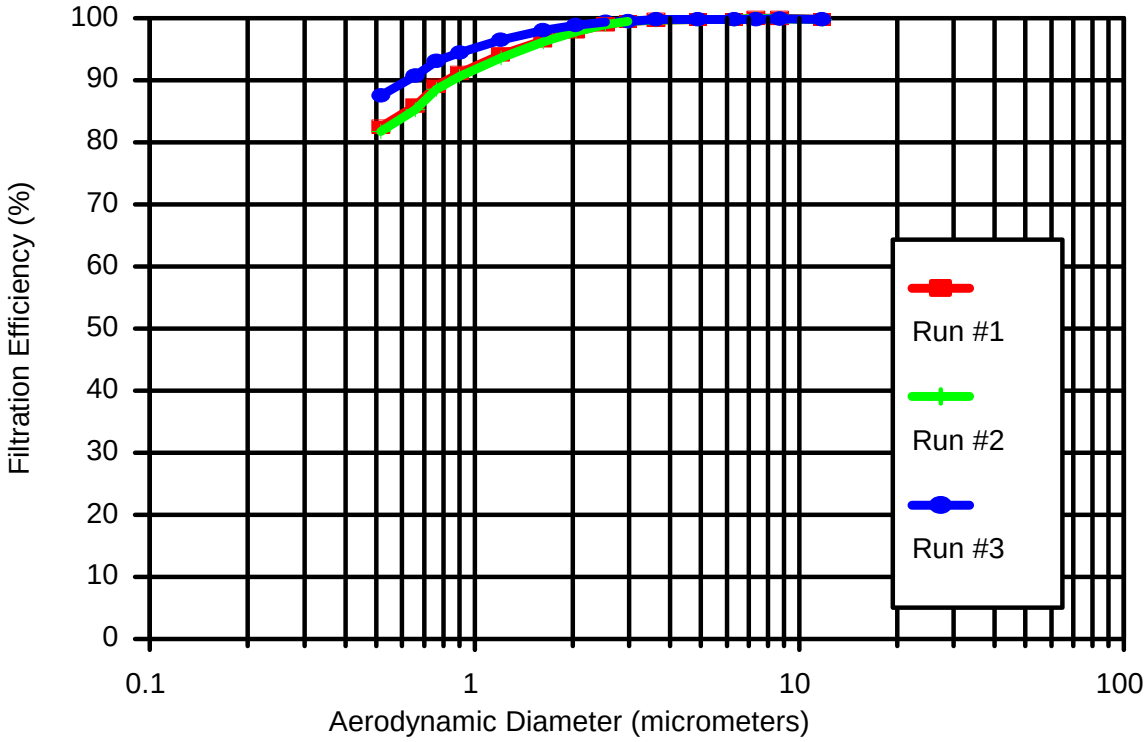

Figure 1. Triplicate solid-phase particle removal efficiency curves for ATI A-3000 5P Bag paint overspray arrestor.

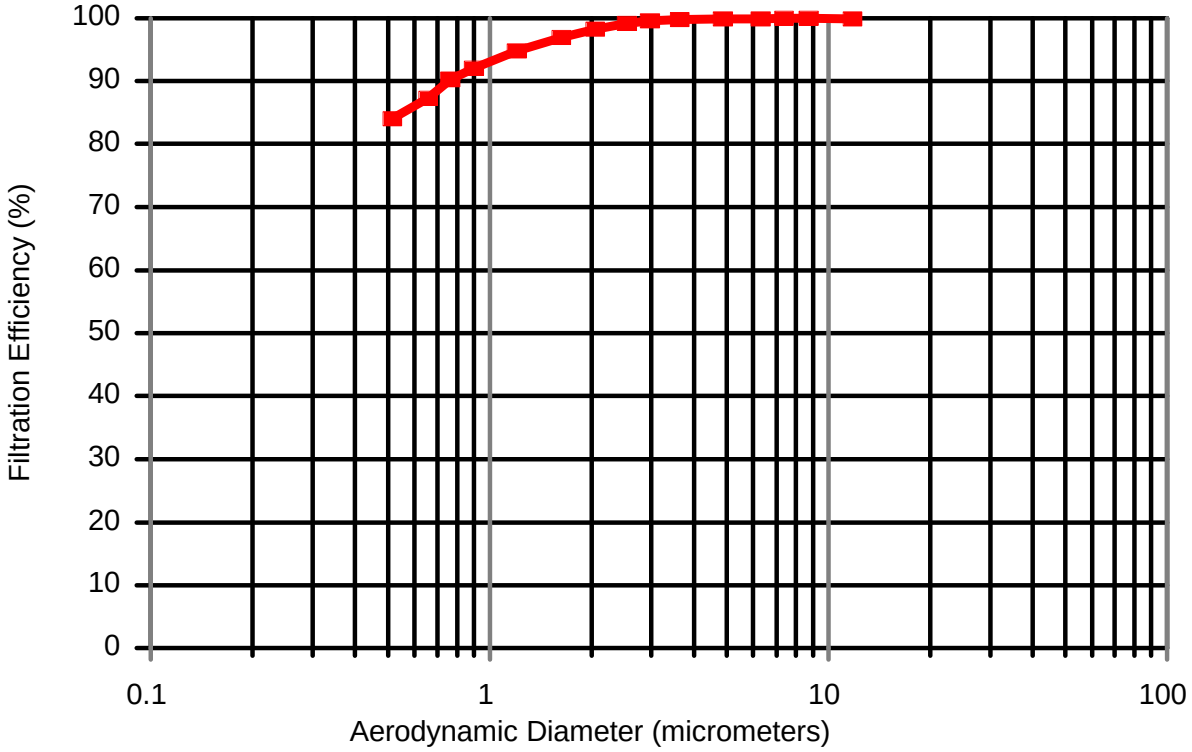

Figure 2. Average of the solid-phase particle removal efficiency curves for ATI A-3000 5P Bag paint overspray arrestor.

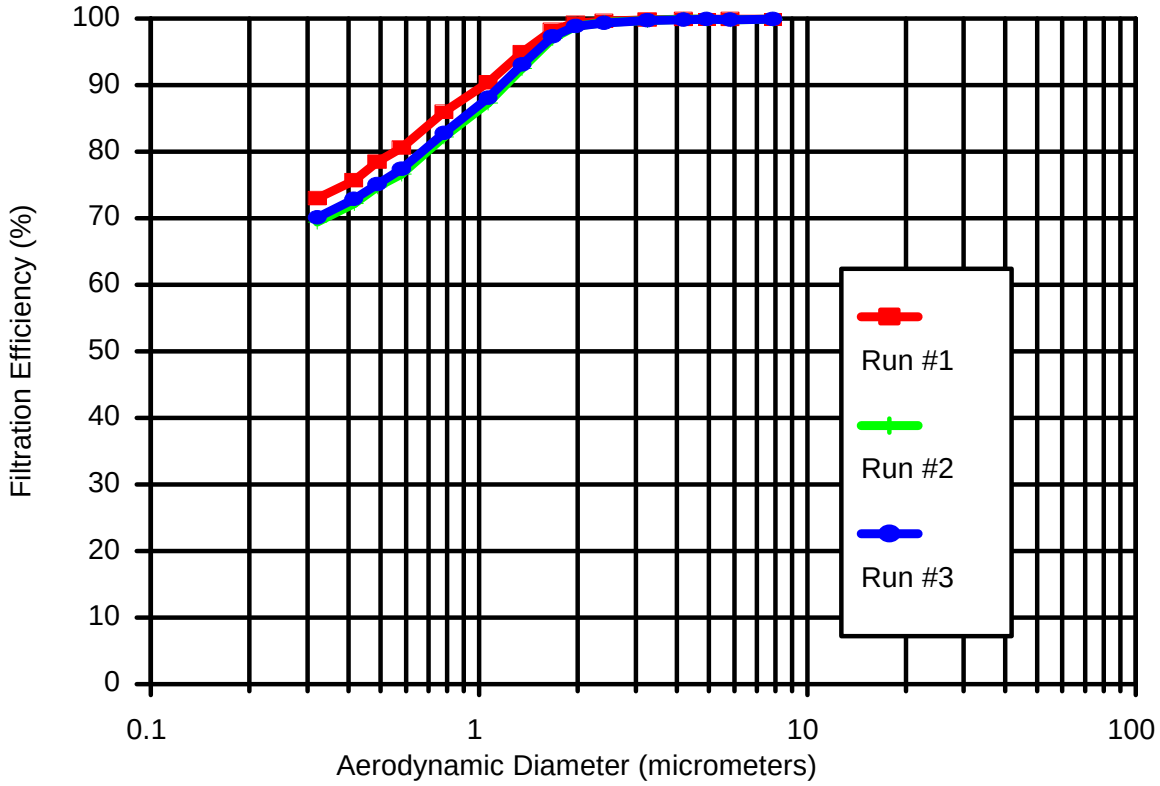

Figure 3. Triplicate liquid-phase particle removal efficiency curves for ATI A-3000 5P Bag paint overspray arrestor.

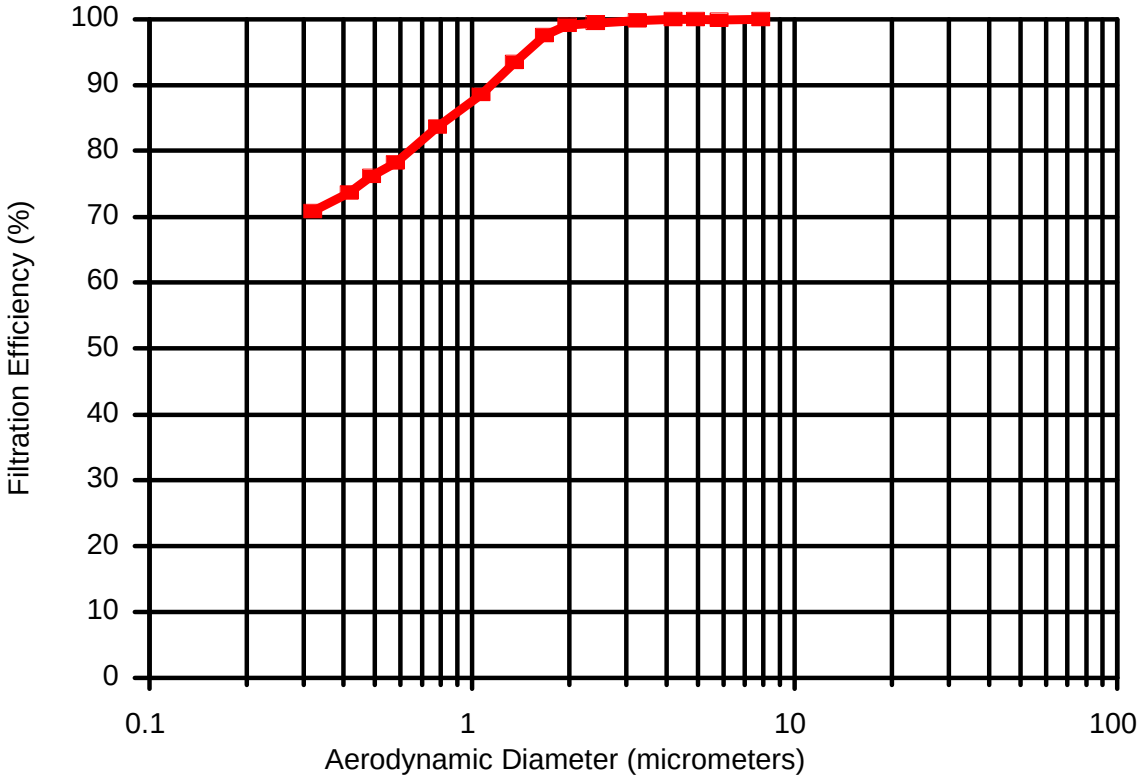

Figure 4. Average of the liquid-phase particle removal efficiency curves for ATI A-3000 5P Bag paint overspray arrestor.

TABLE 4

SUMMARY OF PRESSURE DROP MEASUREMENTS

Test No.	Initial Pressure Drop (inch H_2O)
03249911	0.28
03259902	0.27
03259904	0.34
03259906	0.33
03259908	0.27
03259910	0.27

TABLE 5. EXISTING SOURCES*:

LIQUID-PHASE CHALLENGE AEROSOL PARTICLES

Aerodynamic particle diameter range, µm	Filtration efficiency requirement, %	Filtration efficiency achieved, %
> 5.7	> 90	>99
> 4.1	> 50	>99
> 2.2	> 10	99

TABLE 6. EXISTING SOURCES*:

SOLID-PHASE CHALLENGE AEROSOL PARTICLES

Aerodynamic particle diameter range, µm	Filtration efficiency requirement, %	Filtration efficiency achieved, %
> 8.1	> 90	>99
> 5.0	> 50	>99
> 2.6	> 10	99

TABLE 7. NEW SOURCES*:

LIQUID-PHASE CHALLENGE AEROSOL PARTICLES

Aerodynamic particle diameter range, µm	Filtration efficiency requirement, %	Filtration efficiency achieved, %
> 2.0	> 95	99
> 1.0	> 80	87
> 0.42	> 65	74

TABLE 8. NEW SOURCES*:

SOLID-PHASE CHALLENGE AEROSOL PARTICLES

Aerodynamic particle diameter range, µm	Filtration efficiency requirement, %	Filtration efficiency achieved, %
> 2.5	> 95	99
> 1.1	> 85	94
> 0.70	> 75	88

*A new source is any affected source that commenced construction after October 29, 1996. An existing source is any affected source that is not new.

Appendix A

DESCRIPTION OF THE TEST RIG AND METHODOLOGY

TEST DUCT

The tests were conducted in RTI's air cleaner test facility (Figure A-1). The test rig's ducting was primarily of 24 x 24 in. (0.61 x 0.61m) cross section and made of 14-gauge stainless steel. The blower is rated at 15 hp (11 kW) with a flow capacity of 3000 cfm (1.4 m^3/s) at 13 in. H_2O (3200 Pa). The inlet and outlet filter banks consist of two 24 x 24 x 2 in. (0.61 x 0.61 x 0.05 m) prefilters and two 24 x 24 x 12 in. (0.61 x 0.61 x 0.30 m) high efficiency particulate air (HEPA) filters rated at 2000 cfm (0.9 m^3/s) each. The system operates at positive pressure to minimize infiltration of room air.

To mix the test aerosol with the air stream, an orifice plate and mixing baffle were located immediately downstream of the aerosol injection point and upstream of the test arrestor. An identical orifice plate and mixing baffle were added after the 180° bend. The latter downstream orifice served two purposes. It straightened out the flow after going around the bend, and it mixed any aerosol that penetrated the air cleaning device. Mixing the penetrating aerosol with the air stream is necessary to obtain a representative downstream aerosol measurement.

AIRFLOW

Airflow was measured with a 4 in. (0.1 m) ID American Society of Mechanical Engineers (ASME) flow nozzle. The nominal velocity through the arrestor was computed by dividing the volumetric flow by the nominal face area of the device. Airflow was manually controlled by a 14 in. (0.36 m) diameter butterfly valve.

OPTICAL PARTICLE COUNTER (OPC)

Aerosol concentrations were measured with a Climet Instruments Model 226 OPC. This OPC uses a white-light illumination source and has a wide collection angle for the scattered light. The OPC's sampling rate was 0.25 cfm (0.00012 m^3/s).

The output of the OPC was input to a Climet Instruments Model 8040 multichannel analyzer equipped with Model 05872005 and 05872006 input boards. These boards provide 16 sizing channels covering the range from 0.3 to 10 µm. The 8040 was also equipped with a Model CI-298 sequential interface board. This interface provides a contact closure at the end of each sample and also provides a 15-sec delay in particle counting after each sample. The contact closure was used to control the operation of electromechanical valve actuators in the upstream and downstream sample lines. The 15-sec delay allows time for the new sample to be acquired.

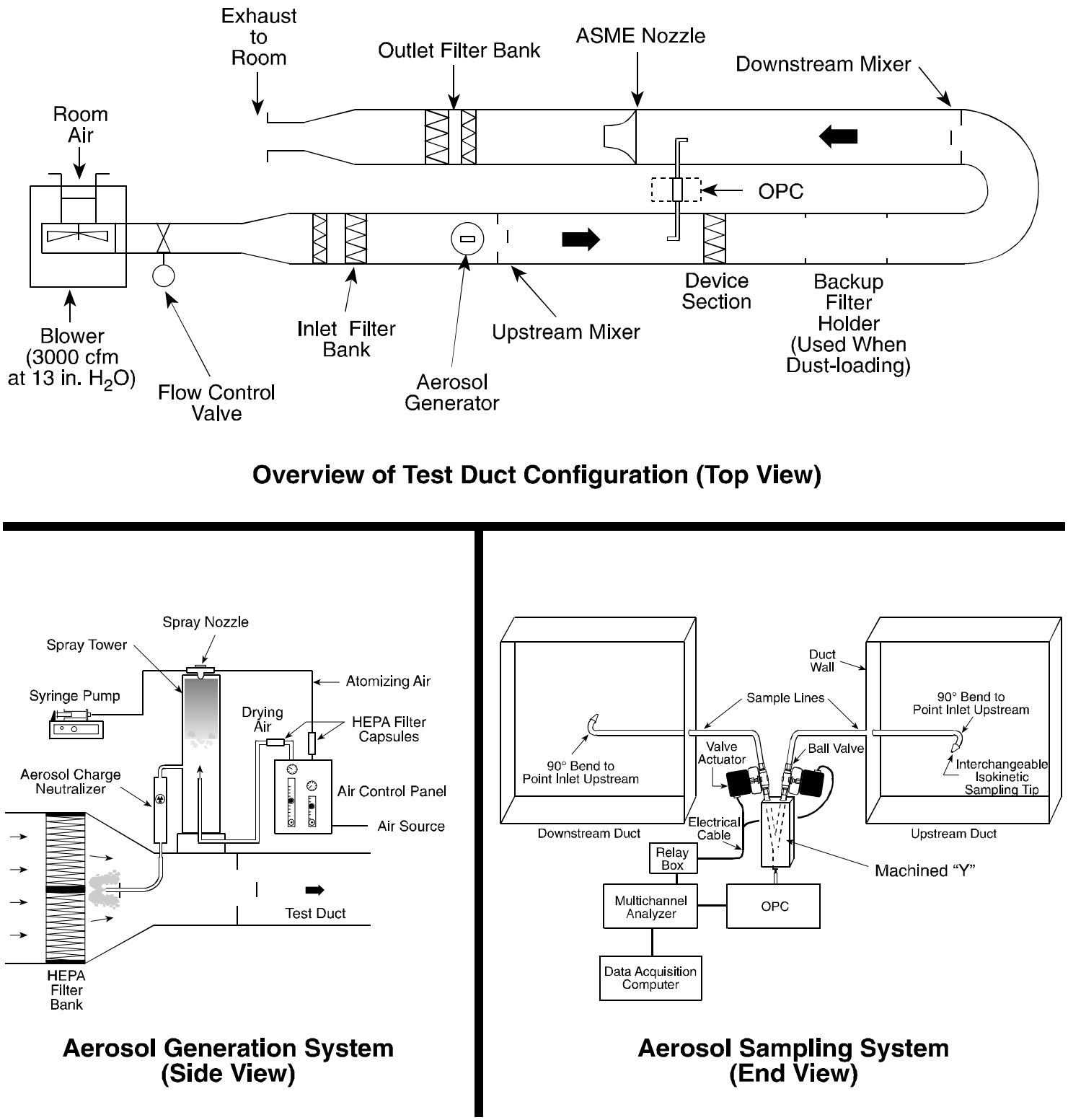

Figure A-1. Schematic illustration of the fractional efficiency test rig.

AEROSOL GENERATION

Two types of challenge aerosols were used: liquid- and solid-phase. The selection of liquid- or solid-phase challenge aerosol particles is important because for some types of paint arrestors significantly different filtration efficiencies will be achieved depending upon the phase of the challenge aerosol particles. (This is due to particle "bounce" associated with solid-phase particles.) The liquid-phase challenge aerosol is oleic acid, a non-toxic, low-volatility liquid. The solid-phase aerosol is potassium chloride (KCl) generated from an aqueous solution. KCl was selected as the solid-phase aerosol because of its relatively high water solubility, high deliquescence humidity (85% relative humidity), known crystalline structure (facilitates complete drying), and low toxicity. The KCl solution was prepared by combining 0.66 lb (300 g) of KCl with 0.035 ft^3 (1 L) of distilled water. Both oleic acid and KCl are compatible with accurate measurement by the optical particle counter.

The oleic acid or the KCl solution was nebulized using a two-fluid (air and liquid) air atomizing nozzle (Spray Systems 1/4 J siphon spray nozzle) as illustrated in Figure A-1 (aerosol generation system). The nozzle was positioned at the top of a 12 in. (0.30 m) diameter, 51 in. (1.3 m) tall transparent acrylic spray tower. The tower served two purposes. It allowed the salt droplets to dry by providing an approximate 40 sec. mean residence time, and it allowed larger-sized particles (of either KCl or oleic acid) to fall out of the aerosol. After generation, the aerosol passed through a TSI Model 3054 aerosol neutralizer (Kr-85 radioactive source) to neutralize any electrostatic charge on the aerosol (electrostatic charging is an unavoidable consequence of most aerosol-generation methods).

The KCl solution or oleic acid was fed to the atomizing nozzle at 1.2 mL/min (4.2×10^{-5} ft^3/min) by means of a pump. Varying the operating air pressure of the generator allows control of the mean diameter of the challenge aerosol.

AEROSOL SAMPLING SYSTEM

The aerosol sampling lines were 0.55 in. (14 mm) ID stainless steel lines and used gradual bends [radius of curvature = 2.25 in. (57 mm)] when needed. These dimensions were chosen to minimize particle losses in the sample lines. A custom-made "Y" fitting connected the upstream and downstream lines to the OPC. The two branches of the "Y" merged gradually to minimize particle loss in the intersection of the "Y" due to centrifugal or impaction forces.

Immediately above the "Y," electrically actuated ball valves were installed in each branch (Parker Model EA Electro-Mechanical Valve Actuator). The opening and closing of the valves were automatically controlled by the OPC's sequential sampling interface board. The valves take approximately 2 sec. to complete an opening or closing maneuver.

Isokinetic sampling nozzles of the appropriate entrance diameter were placed on the ends of the sample probes to maintain isokinetic sampling for all the test flow rates.

TEST PROCEDURES

The aerosol penetration of the test device was calculated from the average of 10 upstream and 10 downstream samples taken sequentially (i.e., one upstream, one downstream, one upstream, one downstream, . . . until 10 each were obtained). This sequential sampling scheme was selected to minimize the effect of aerosol generator variability. Each sample was 2 minutes in duration. The sampling also included background upstream and downstream measurements at the beginning and end of each test. The test sequence was as follows:

1. Warm up OPC and install proper sample tips for isokinetic sampling.
2. Install air cleaner test device and bring test duct to desired flow rate.
3. With the aerosol generator off, obtain five measurements of the upstream and downstream background particle counts.
4. Turn on the aerosol generator and allow it to run for a minimum of 10 minutes to stabilize.
5. After the stabilization period, obtain 10 upstream and 10 downstream particle counts using a repeated upstream-downstream sampling sequence until 10 each are obtained.
6. Turn off the aerosol generator. Wait 10 minutes, then obtain five additional upstream and downstream background measurements.

CONTROL TESTS:

In addition to evaluating the test arrestor, 0 and 100% penetration control tests and a reference filter control test were conducted to ensure that reliable measurements are obtained. The 100% penetration test was a relatively stringent test of the adequacy of the overall duct, sampling, measurement and aerosol generation system. These tests were performed as normal penetration tests except that the paint arrestor was not used. A perfect system would yield a measured penetration of 1 at all particle sizes. Deviations from 1 can occur due to particle losses in the duct, differences in the degree of aerosol uniformity (i.e., mixing) at the upstream and downstream probes, and differences in particle-transport efficiency in the upstream and downstream sampling lines. Results from the 100% penetration tests were used during data analysis to correct penetration measurements obtained during the arrestor tests.

The 0% penetration test was performed by using a HEPA filter rather than a paint arrestor. This test confirmed the adequacy of the instrument response time and sample line lag. The 0% penetration test was performed on a monthly basis.

The reference filter control test consisted of performing a solid-phase efficiency test on the same filter during each ETV test. The reference filter data from each test were compared to the original, baseline reference filter data to determine if there was any substantial change in the test system between the tests.

DATA ANALYSIS

Nomenclature

U = Upstream particle count
D = Downstream particle count
U_b = Upstream background count
D_b = Downstream background count
P_o = observed penetration = $\bar{D}/\bar{U}$
P_{100} = 100% penetration value determined from the control tests

P = Penetration corrected for P_{100} value
Overbar: denotes arithmetic mean of quantity

Analysis of each test involves the following quantities:

- P_{100} value for each sizing channel from the blank (no-filter) test,
- 2 upstream background values,
- 2 downstream background values,
- 10 upstream values with aerosol generator on, and
- 10 downstream values with aerosol generator on.

Using the values associated with each sizing channel, the penetration associated with each particle sizing channel was calculated as:

$$P = \{(\bar{D} - \bar{D}_b) / (\bar{U} - \bar{U}_b)\} / P_{100} \quad .$$

Filtration efficiency was then calculated as:

$$\text{Filtration Efficiency (\%)} = 100\ (1 - P).$$

DEFINITION OF PARTICLE DIAMETER

Over the 0.3 to 10 µm diameter size range, the "aerodynamic" particle diameter is often of more significance than the physical diameter (as measured by the OPC) relative to aerosol filtration and aerosol deposition within the human respiratory tract. The aerodynamic diameter (D_{Aero}) is related to the physical diameter ($D_{Physical}$) by:

$$D_{Aero} \quad ' \quad D_{Physical} \sqrt{\frac{?_{Particle}}{?_o} \quad \frac{CCF_{Physical}}{CCF_{Aero}} \quad \frac{1}{?}}$$

where

$?_{Particle}$ is the density of the particle in g/cm^3.

$?_o$ is unit density of 1 g/cm^3.

$CCF_{Physical}$ is the Cunningham Correction Factor at $D_{Physical}$.

CCF_{Aero} is the Cunningham Correction Factor at D_{Aero}.

? is the dynamic shape factor.

For oleic acid droplets having a density of 0.89 g/cm^3 and being spherical (? = 1), the aerodynamic diameter will be about 6% smaller than the measured diameter.

KCl has a density of 1.98 g/cm^3. The KCl particles form from the evaporation of aqueous solution droplets. Because KCl has an inherent cubic crystalline structure, it is expected that the KCl particles will be cubic or relatively compact cubic clusters; however, their actual shape, or range of shapes, is unknown. Because the shape factor is unknown, the shape factor for KCl is assigned a value of 1 and the diameter is termed the "nominal" aerodynamic diameter.

The aerodynamic diameters associated with the 15 OPC sizing channels are tabulated in Table A-1 for oleic acid and KCl. Also listed is the physical diameter size range for each channel based on the manufacturer's calibration curve using monodisperse polystyrene latex (PSL) spheres.

Table A-1. Physical and Aerodynamic Sizing Channels for the Calibration and Test Aerosols

	Particle Diameter Size Range (µm)*		
	PSL	OLEIC ACID	KCl
OPC Channel Number	Physical Diameter	Aerodynamic Diameter	Nominal Aerodynamic Diameter
1	0.3 - 0.4	0.28 - 0.37	0.45 - 0.59
2	0.4 - 0.5	0.37 - 0.47	0.59 - 0.73
3	0.5 - 0.55	0.47 - 0.52	0.73 - 0.80
4	0.55 - 0.7	0.52 - 0.66	0.80 - 1.02
5	0.7 - 1.0	0.66 - 0.94	1.02 - 1.44
6	1.0 - 1.3	0.94 - 1.22	1.44 - 1.86
7	1.3 - 1.6	1.22 - 1.51	1.86 - 2.28
8	1.6 - 2	1.51 - 1.88	2.28 - 2.85
9	2 - 2.2	1.88 - 2.07	2.85 - 3.13
10	2.2 - 3	2.07 - 2.83	3.13 - 4.25
11	3 - 4	2.83 - 3.77	4.25 - 5.66
12	4 - 5	3.77 - 4.71	5.66 - 7.07
13	5 - 5.5	4.71 - 5.18	7.07 - 7.77
14	5.5 - 7	5.18 - 6.60	7.77 - 9.88
15	7 - 10	6.60 - 9.43	9.88 - 14.1

*The particle diameter size ranges are defined as greater than the indicated lower limit and less than or equal to the indicated upper limit.

APPENDIX B

Certificates of Calibration

Certificate of Traceability

8500D-II THERMOANEMOMETER

Model No. 8500D-II **Serial No. 3810** **Part No. 634493200**

Certificate Number: **1046** Date: **26-Oct-98** P.O. **00329** Order/RMA: **104538**

Customer Number:

Calibration Standards Information

The following standards and equipment were used as references for this calibration.

Tested By	Date Tested	Inst. No.	Cal. Due	NIST Test Numbers
LOZADA	10/23/98	747	4/9/00	259340;257602;258909;258599;260222;811/258622;
		746	4/9/00	811/258522;811/260178;
		922	6/8/00	836/259947-98 ;
		881	11/16/98	811/257078 ; 247770 ; 253806 ; 811/255474 ; 253699 ; USN22783C ; Chem. Const. ; 254227 ; 811/254736 ; 811/251992 ; 251971 ; 811/251741 ; 811/253662 ; 811/256216 ; 611802 ;
		857	6/8/00	836/259947-98 ; ;
		794	3/18/99	
		666	2/21/00	811/255765 ; 251971 ; 811/259304-98 ; 811/257773 ; 256216 ; ;
		399	11/12/98	P-8531A ; P-8531B ; 38126 ; 254160 ; 255302 ;
		326	2/4/99	P-8531A ; P-8531B ; 38126 ; 254160 ; 259009 ;
		319	11/12/98	P-8531A ; P-8531B ; 38126 ; 254160 ; 255302 ;
		301	12/11/98	836/257126-96 ;

Alnor Instrument Company hereby certifies that the above designated equipment was found to meet or exceed manufacturing specificactions. Their calibration is traceable to the National Institute of Standards and Technology (NIST) or natural physical cogstants. The policies and procedures used comply with MIL-STD-45662A. This certificate shall not be reproduced except in full, without the written consent of Alnor.

Reviewed by

26-Oct-98

Date

ALNOR
A TSI Company

Alnor Instrument Company
7555 N. Linder Avenue, Skokie, IL 60077
Tel. 847-677-3500 Fax. 847-677-3539

©GOES 346

Meriam Instrument
a Scott Fetzer company

FILE NO. 040FB:001-19
PAGE 1 OF 1

LETTER OF CERTIFICATION
LAMINAR FLOW ELEMENT

CUSTOMER NAME: RESEARCH TRIANGLE INST

CUSTOMER ORDER NUMBER: 00161

MERIAM ORDER NUMBER: 772900

Meriam Instrument certifies that the completed LFE unit has been calibrated and correlated at several points of flow rate using a Meriam Standard, which is controlled per the calibration system requirements of ANSI Z540-1 and traceable to the National Institute of Standards and Technology. The collective uncertainty of the measurement standards has a 1:1 ratio to the acceptable tolerance for the flow rate being calibrated.

The total rss uncertainty of the completed laminar flow unit is +/- .72 % of reading.

CUSTOMER ID NO.: 013716

MODEL NO.: 50MH10-8 SERIAL NO.: 758860-K1

FLOW CURVE/TABLE NO.: 30624

DATE OF CALIBRATION 11-11-1998 BY GEORGE ROBOTKAY

AS RECEIVED CONDITION: ✓ In Tolerance ____ Out of Tolerance ____ NA

AS LEFT CONDITION : ✓ In Tolerance ____ Out of Tolerance ____ NA

CALIBRATION INTERVAL: TO BE DETERMINED BY CUSTOMER BASED ON USAGE OF LFE.

FLOW STANDARD SERIAL NO.	DATE OF LAST CAL	DATE OF NEXT CAL
WMMC2-6	JAN 1998	JAN 1999

The LFE unit listed hereon has been successfully calibrated in accordance with Meriam Instrument Procedure A-35822.

QUALITY ASSURANCE INSPECTOR
MERIAM INSTRUMENT

Jack Weigand
QUALITY ASSURANCE MANAGER
MERIAM INSTRUMENT

10920 Madison Avenue • Cleveland, Ohio 44102 • (216) 281-1100 • FAX (216) 281-0228
www.meriam.com

CLIMET INSTRUMENTS COMPANY

1320 WEST COLTON AVE., REDLANDS, CA 92374 • PHONE: (909) 793-2788 • FAX: (909) 793-1738

CERTIFICATE OF CALIBRATION

INSTRUMENT CALIBRATED

MODEL: 226 aerosol particle counter, S/N 61882

CONTROL NUMBER: LCS03501

DATE CALIBRATED: 2 / 4 / 99 NEXT CALIBRATION: 8 / 4 / 99

RECOMMENDED CALIBRATION INTERVAL: 6 months

L. Sparks
CALIBRATED BY

Jean R. Guiter
APPROVED BY

TRACEABILITY STATEMENT

This instrument has been calibrated in accordance with ISO 10012-1/ANSI Z540-1 (which replaces MIL-STD-45662A) and relevant portions of Federal Standards 209, ASTM F-50, F322, and F328.

Temperature and Relative Humidity are not controlled during calibration because of the wide operating range of the instrument. The operating limits of this instrument are:

TEMPERATURE: 30°F TO 122°F
HUMIDITY: 0-100%, non-condensing

All test equipment used in the calibration of Climet Instruments' products is calibrated at six-month intervals by an outside calibration service. Calibration certificates for each piece of test equipment are on file at Climet; copies will be supplied if requested.

Calibration traceability to a National Measurement Standard (NMS) is established by using mono-disperse latex spheres as a calibration standard. These spheres are sized by methods traceable, by lot number, to the National Institute of Science and Technology.

APPENDIX C

Fractional Efficiency Data Sheets

Key to notation used in the following tables:

Diam.	Particle Diameter (µm)
U. Bckgrnd:	The upstream background particle counts measured with the aerosol generator off.
Upstream:	The upstream particle counts measured with the aerosol generator on.
D. Bckgrnd:	The downstream background particle counts measured with the aerosol generator off.
Downstream:	The downstream particle counts measured with the aerosol generator on.
Meas. Penetration:	The penetration computed as:

$$Meas.\ Penetration\ '\ \frac{(\ Downstream\ \ \&\ \ D.\ Bckgrnd\ )}{(\ Upstream\ \ \&\ \ U.\ Bckgrnd\ )}$$

P100 Correction Values:	Penetration values measured with no filter in the test section. These values are used to correct subsequent penetration measurements for particle losses within the test duct and sampling system.
Corrected Penetration:	The measured penetration corrected by the P100 values:

$$Corrected\ Penetration\ '\ \frac{Meas.Penetration}{P100\ Correction\ Values}$$

Corrected Efficiency (%):	100 x (1 - Corrected Penetration)
DQO	Data Quality Objective

Test No. 03249908
No Filter
Solid-Phase

Particle Counts per Indicated OPC Channel (1-Minute Samples @ 7.1 L/min)

OPC Channel Number						1	2	3	4	5	6	7	8	9	10	11	12	13	14	15
Min. Diam. (um)						0.45	0.59	0.73	0.80	1.02	1.44	1.86	2.28	2.85	3.13	4.25	5.66	7.07	7.77	9.88
Max. Diam. (um)						0.59	0.73	0.80	1.02	1.44	1.86	2.28	2.85	3.13	4.25	5.66	7.07	7.77	9.88	14.10
Geo. Mean Diam (um)						0.52	0.66	0.77	0.90	1.21	1.64	2.06	2.55	2.98	3.65	4.91	6.33	7.41	8.76	11.81
ENTER DATA BELOW																				
U. Bckgrnd	1	01	03-24-1999	14:29:37	01:00	3	2	2	0	1	1	1	0	0	0	0	0	0	0	0
Upstream	1	01	03-24-1999	14:39:48	01:00	11820	17610	5588	10010	14640	8982	11960	10870	2644	5623	3252	1153	162	299	214
Upstream	1	01	03-24-1999	14:42:18	01:00	11720	17290	5479	9870	14570	8871	11710	10620	2533	5527	3342	1106	175	295	184
Upstream	1	01	03-24-1999	14:44:48	01:00	11010	16780	5270	9371	13850	8605	11090	10320	2401	5214	3132	1060	182	290	218
Upstream	1	01	03-24-1999	14:47:18	01:00	11380	16560	5198	9217	13950	8520	11230	10210	2478	5191	3198	1076	176	315	199
Upstream	1	01	03-24-1999	14:49:48	01:00	11640	16930	5462	9953	14450	8960	11690	10600	2506	5466	3131	1064	168	304	194
Upstream	1	01	03-24-1999	14:52:18	01:00	11840	17230	5560	9827	14750	8934	11750	10770	2545	5324	3269	1146	193	291	177
Upstream	1	01	03-24-1999	14:54:48	01:00	11010	16070	5077	9241	13630	8214	10950	10100	2413	5034	3072	1071	175	316	202
Upstream	1	01	03-24-1999	14:57:18	01:00	12280	18230	5719	10550	15500	9548	12340	11730	2824	5883	3591	1303	234	298	230
Upstream	1	01	03-24-1999	14:59:48	01:00	12420	18560	5869	10490	15860	9513	12340	11610	2838	5827	3596	1205	238	369	236
Upstream	1	01	03-24-1999	15:02:18	01:00	12520	18820	5947	10710	15790	9494	12730	11750	2855	6172	3717	1281	223	337	224
U. Bckgrnd	1	01	03-24-1999	15:09:52	01:00	2	1	3	3	1	0	1	1	0	1	0	0	0	0	0
ENTER DATA BELOW																				
D. Bckgrnd	2	01	03-24-1999	14:30:52	01:00	4	4	1	1	1	1	2	3	3	4	2	0	0	0	0
Downstream	2	01	03-24-1999	14:41:03	01:00	11810	18000	5519	10020	14710	9096	11750	11090	2671	5756	3419	1115	178	310	207
Downstream	2	01	03-24-1999	14:43:33	01:00	11470	16940	5275	9667	14180	8710	11540	10630	2547	5472	3233	1148	182	274	172
Downstream	2	01	03-24-1999	14:46:03	01:00	11190	16910	5360	9351	14100	8692	11310	10790	2521	5451	3374	1101	185	290	203
Downstream	2	01	03-24-1999	14:48:33	01:00	11090	16640	5179	9510	14190	8648	11420	10510	2703	5491	3244	1095	176	299	178
Downstream	2	01	03-24-1999	14:51:03	01:00	11440	17020	5475	9777	14460	9034	11590	11040	2558	5666	3314	1144	162	306	207
Downstream	2	01	03-24-1999	14:53:33	01:00	12230	17540	5590	10100	15020	9147	11830	11240	2615	5801	3511	1171	190	300	191
Downstream	2	01	03-24-1999	14:56:03	01:00	12030	17800	5712	10070	14950	9348	11840	11440	2682	6024	3576	1176	180	320	184
Downstream	2	01	03-24-1999	14:58:33	01:00	12440	18820	5942	10740	15800	9671	12430	11850	2818	6123	3707	1308	217	324	240
Downstream	2	01	03-24-1999	15:01:03	01:00	12420	18430	5845	10420	15720	9551	12420	11810	2759	6010	3797	1295	201	326	177
Downstream	2	01	03-24-1999	15:03:33	01:00	12740	18630	5776	10600	15760	9542	12640	11880	2868	6237	3863	1295	213	318	249
D. Bckgrnd	2	01	03-24-1999	15:11:07	01:00	9	0	2	2	0	0	0	0	1	0	0	0	0	0	0
Meas. Penetration						1.01	1.02	1.01	1.01	1.01	1.02	1.01	1.03	1.03	1.05	1.05	1.03	0.98	0.98	0.97
P100 correction values						1.00	1.00	1.00	1.00	1.00	1.00	1.00	1.00	1.00	1.00	1.00	1.00	1.00	1.00	1.00
Corrected Penetration						1.01	1.02	1.01	1.01	1.01	1.02	1.01	1.03	1.03	1.05	1.05	1.03	0.98	0.98	0.97
Corrected Efficiency (%)						-1	-2	-1	-1	-1	-2	-1	-3	-3	-5	-5	-3	2	2	3
Data Acceptance Criteria:																				
Total Challenge Counts for Each Channel:						117640	174080	55169	99239	146990	89641	117790	108580	26037	55261	33300	11465	1926	3114	2078
Data Quality Objective:						> 500	> 500	> 500	> 500	> 500	> 500	> 500	> 500	> 500	> 500	> 500	> 500	> 500	> 500	> 500
Does this meet DQO:						Yes	Yes	Yes	Yes	Yes	Yes	Yes	Yes	Yes	Yes	Yes	Yes	Yes	Yes	Yes
Standard Deviation of Penetration for Each Channel :						0.07	0.07	0.07	0.07	0.07	0.07	0.06	0.08	0.08	0.09	0.10	0.11	0.17	0.09	0.16
Data Quality Objective:						<0.10	<0.10	<0.10	<0.10	<0.10	<0.10	<0.10	<0.10	<0.10	< 0.30	< 0.30	< 0.30	< 0.30	< 0.30	< 0.30
Does this meet DQO:						Yes	Yes	Yes	Yes	Yes	Yes	Yes	Yes	Yes	Yes	Yes	Yes	Yes	Yes	Yes
Maximum observed particle concentration (#/cc):						15.9														
Data Quality Objective: max. allowable conc. (#/cc):						< 23														
Does this meet the DQO:						Yes, (applies to all channels)														

Test No. 03249909
Reference Filter
Solid-Phase

Particle Counts per Indicated OPC Channel (1-Minute Samples @ 7.1 L/min)

OPC Channel Number						1	2	3	4	5	6	7	8	9	10	11	12	13	14	15
Min. Diam. (um)						0.45	0.59	0.73	0.80	1.02	1.44	1.86	2.28	2.85	3.13	4.25	5.66	7.07	7.77	9.88
Max. Diam. (um)						0.59	0.73	0.80	1.02	1.44	1.86	2.28	2.85	3.13	4.25	5.66	7.07	7.77	9.88	14.10
Geo. Mean Diam (um)						0.52	0.66	0.77	0.90	1.21	1.64	2.06	2.55	2.98	3.65	4.91	6.33	7.41	8.76	11.81
ENTER DATA BELOW																				
U. Bckgrnd	1	01	03-24-1999	15:26:12	01:00	1	1	0	1	1	1	1	2	0	0	1	0	0	0	0
Upstream	1	01	03-24-1999	15:40:02	01:00	10550	15400	4991	9120	13640	8335	10810	10450	2460	5471	3318	1140	193	293	228
Upstream	1	01	03-24-1999	15:42:32	01:00	10310	15590	4945	9105	13720	8373	11140	10700	2548	5513	3465	1143	202	343	243
Upstream	1	01	03-24-1999	15:45:02	01:00	10400	15880	5187	9332	13790	8453	11090	10770	2594	5556	3577	1188	206	358	218
Upstream	1	01	03-24-1999	15:47:32	01:00	10670	15840	4998	9175	13770	8486	11180	10780	2596	5626	3420	1216	209	324	227
Upstream	1	01	03-24-1999	15:50:02	01:00	10490	15410	5175	9222	13930	8353	11140	10630	2624	5494	3467	1222	204	330	211
Upstream	1	01	03-24-1999	15:52:32	01:00	10600	15510	4938	9293	13800	8450	10980	10750	2519	5720	3404	1124	202	339	216
Upstream	1	01	03-24-1999	15:55:02	01:00	9640	14270	4649	8437	12330	7680	9996	9322	2269	4823	2959	1007	188	278	172
Upstream	1	01	03-24-1999	15:57:32	01:00	10370	15500	4955	9059	13270	8130	10780	10140	2378	5163	3067	1034	172	280	195
Upstream	1	01	03-24-1999	16:00:02	01:00	10480	15560	5008	8861	13270	8140	10800	10070	2414	4990	3159	1119	157	312	196
Upstream	1	01	03-24-1999	16:02:32	01:00	10330	15490	4933	8856	13130	8229	10800	10010	2373	5071	3133	1064	198	311	221
U. Bckgrnd	1	01	03-24-1999	16:11:33	01:00	0	0	0	0	0	0	1	0	0	0	0	0	0	0	0
ENTER DATA BELOW																				
D. Bckgrnd	2	01	03-24-1999	15:27:27	01:00	1	0	0	0	1	0	0	0	0	0	0	0	0	0	0
Downstream	2	01	03-24-1999	15:41:17	01:00	10390	15050	4766	8859	12350	6798	8035	5902	1013	1441	403	101	18	19	23
Downstream	2	01	03-24-1999	15:43:47	01:00	10250	15120	4724	8843	12560	6996	8065	6083	1052	1402	409	80	21	19	12
Downstream	2	01	03-24-1999	15:46:17	01:00	10430	15270	4777	8724	12840	7177	8080	5949	973	1339	372	81	9	21	15
Downstream	2	01	03-24-1999	15:48:47	01:00	10870	15440	4928	8833	12560	7198	8212	5928	970	1382	314	75	11	20	17
Downstream	2	01	03-24-1999	15:51:17	01:00	10320	15100	4698	8813	12820	7060	8216	5966	987	1312	337	54	6	20	9
Downstream	2	01	03-24-1999	15:53:47	01:00	10580	15270	4772	8800	12630	7143	8313	5897	967	1342	366	80	10	17	8
Downstream	2	01	03-24-1999	15:56:17	01:00	10400	15120	4843	8312	12100	6792	7838	5375	853	1249	333	84	12	28	14
Downstream	2	01	03-24-1999	15:58:47	01:00	10490	15010	4667	8384	11930	6907	7906	5671	908	1208	350	64	13	18	13
Downstream	2	01	03-24-1999	16:01:17	01:00	10160	15080	4653	8202	11910	6667	7573	5245	829	1196	363	84	17	23	14
Downstream	2	01	03-24-1999	16:03:47	01:00	10270	15140	4630	8321	11920	6723	7535	5387	861	1198	324	80	14	20	15
D. Bckgrnd	2	01	03-24-1999	16:12:48	01:00	0	0	0	0	0	1	3	1	0	0	0	0	0	0	0
Meas. Penetration						1.00	0.98	0.95	0.95	0.92	0.84	0.73	0.55	0.38	0.24	0.11	0.07	0.07	0.06	0.07
P100 correction values						1.01	1.02	1.01	1.01	1.01	1.02	1.01	1.03	1.03	1.05	1.05	1.03	0.98	0.98	0.97
Corrected Penetration						0.99	0.97	0.94	0.94	0.91	0.82	0.73	0.54	0.37	0.23	0.10	0.07	0.07	0.07	0.07
Corrected Efficiency (%)						1	3	6	6	9	18	27	46	63	77	90	93	93	93	93
Data Acceptance Criteria:																				
Total Challenge Counts for Each Channel:						103840	154450	49779	90460	134650	82629	108716	103622	24775	53427	32969	11257	1931	3168	2127
Data Quality Objective:						> 500	> 500	> 500	> 500	> 500	> 500	> 500	> 500	> 500	> 500	> 500	> 500	> 500	> 500	> 500
Does this meet DQO:						Yes	Yes	Yes	Yes	Yes	Yes	Yes	Yes	Yes	Yes	Yes	Yes	Yes	Yes	Yes
Standard Deviation of Penetration for Each Channel :						0.03	0.03	0.03	0.04	0.04	0.03	0.03	0.04	0.04	0.02	0.01	0.01	0.02	0.01	0.02
Data Quality Objective:						<0.10	<0.10	<0.10	<0.10	<0.10	<0.10	<0.10	<0.10	<0.10	< 0.30	< 0.30	< 0.30	< 0.30	< 0.30	< 0.30
Does this meet DQO:						Yes	Yes	Yes	Yes	Yes	Yes	Yes	Yes	Yes	Yes	Yes	Yes	Yes	Yes	Yes
Maximum observed particle concentration (#/cc):						14.0														
Data Quality Objective: max. allowable conc. (#/cc):						< 23														
Does this meet the DQO:						Yes, (applies to all channels)														

Test No. 03249910
No Filter
Solid-Phase

Particle Counts per Indicated OPC Channel (1-Minute Samples @ 7.1 L/min)

OPC Channel Number						1	2	3	4	5	6	7	8	9	10	11	12	13	14	15
Min. Diam. (um)						0.45	0.59	0.73	0.80	1.02	1.44	1.86	2.28	2.85	3.13	4.25	5.66	7.07	7.77	9.88
Max. Diam. (um)						0.59	0.73	0.80	1.02	1.44	1.86	2.28	2.85	3.13	4.25	5.66	7.07	7.77	9.88	14.10
Geo. Mean Diam (um)						0.52	0.66	0.77	0.90	1.21	1.64	2.06	2.55	2.98	3.65	4.91	6.33	7.41	8.76	11.81
ENTER DATA BELOW																				
U. Bckgrnd	1	01	03-24-1999	16:19:54	01:00	0	0	0	0	0	0	0	0	0	0	0	0	0	0	0
Upstream	1	01	03-24-1999	16:28:55	01:00	11360	16710	5266	9784	14460	8976	11650	10670	2481	5633	3188	1078	202	288	195
Upstream	1	01	03-24-1999	16:31:25	01:00	11000	16410	5127	9500	14290	8671	11300	10640	2460	5324	3316	1112	157	298	213
Upstream	1	01	03-24-1999	16:33:55	01:00	11170	16220	5068	9348	13730	8632	11290	10390	2403	5264	3236	1092	193	323	211
Upstream	1	01	03-24-1999	16:36:25	01:00	10950	16430	5207	9318	13930	8595	11400	10430	2430	5350	3245	1145	191	302	202
Upstream	1	01	03-24-1999	16:38:55	01:00	10650	16040	5111	9342	13720	8482	11180	10430	2326	5319	3174	1078	203	321	201
Upstream	1	01	03-24-1999	16:41:25	01:00	10520	15750	4954	9199	13450	8352	10960	10170	2503	5140	3159	1053	194	281	229
Upstream	1	01	03-24-1999	16:43:55	01:00	10050	14800	4766	8688	12850	7882	10510	9890	2384	5210	3145	1157	174	321	211
Upstream	1	01	03-24-1999	16:46:25	01:00	11000	15990	5187	9426	13980	8680	11440	10790	2659	5615	3385	1150	199	336	242
Upstream	1	01	03-24-1999	16:48:55	01:00	10990	15920	5197	9470	14430	8740	11440	11000	2638	5597	3338	1222	215	322	215
Upstream	1	01	03-24-1999	16:51:25	01:00	10770	16010	5130	9236	13830	8571	11530	10770	2478	5528	3488	1164	184	333	212
U. Bckgrnd	1	01	03-24-1999	16:58:38	01:00	0	0	0	0	1	0	0	2	0	0	0	0	0	0	0
ENTER DATA BELOW																				
D. Bckgrnd	2	01	03-24-1999	16:21:09	01:00	5	2	1	3	0	0	2	0	2	0	0	0	0	0	0
Downstream	2	01	03-24-1999	16:30:10	01:00	11340	16430	5278	9622	14510	8991	11610	10510	2517	5666	3361	1116	158	279	186
Downstream	2	01	03-24-1999	16:32:40	01:00	10880	16340	5309	9289	13870	8510	11310	10660	2443	5524	3270	1099	179	272	177
Downstream	2	01	03-24-1999	16:35:10	01:00	11020	16420	5080	9428	13870	8706	11270	10590	2470	5656	3418	1158	200	310	205
Downstream	2	01	03-24-1999	16:37:40	01:00	11010	16060	5250	9338	13810	8587	11100	10380	2633	5351	3269	1188	212	285	202
Downstream	2	01	03-24-1999	16:40:10	01:00	10690	15860	5070	9178	13450	8347	11050	10540	2580	5504	3317	1103	172	277	183
Downstream	2	01	03-24-1999	16:42:40	01:00	10830	15980	5121	8918	13510	8380	11020	10450	2469	5334	3303	1119	179	269	190
Downstream	2	01	03-24-1999	16:45:10	01:00	10800	15640	5008	9417	13980	8489	11250	10880	2695	5673	3449	1195	220	314	213
Downstream	2	01	03-24-1999	16:47:40	01:00	10690	15630	5106	9381	14270	8516	11200	10710	2570	5735	3554	1237	188	313	231
Downstream	2	01	03-24-1999	16:50:10	01:00	10830	15880	5158	9314	14310	8874	11050	11000	2603	5738	3525	1285	194	319	194
Downstream	2	01	03-24-1999	16:52:40	01:00	10710	15730	5145	9130	13980	8433	11070	11010	2630	5725	3538	1207	184	304	219
D. Bckgrnd	2	01	03-24-1999	16:59:53	01:00	0	1	0	0	0	0	0	1	0	0	0	0	0	0	0
Meas. Penetration						1.00	1.00	1.01	1.00	1.01	1.00	0.99	1.01	1.03	1.04	1.04	1.04	0.99	0.94	0.94
P100 correction values						1.00	1.00	1.00	1.00	1.00	1.00	1.00	1.00	1.00	1.00	1.00	1.00	1.00	1.00	1.00
Corrected Penetration						1.00	1.00	1.01	1.00	1.01	1.00	0.99	1.01	1.03	1.04	1.04	1.04	0.99	0.94	0.94
Corrected Efficiency (%)						0	0	-1	0	-1	0	1	-1	-3	-4	-4	-4	1	6	6
Data Acceptance Criteria:																				
Total Challenge Counts for Each Channel:						108460	160280	51013	93311	138670	85581	112700	105180	24762	53980	32674	11251	1912	3125	2131
Data Quality Objective:						> 500	> 500	> 500	> 500	> 500	> 500	> 500	> 500	> 500	> 500	> 500	> 500	> 500	> 500	> 500
Does this meet DQO:						Yes	Yes	Yes	Yes	Yes	Yes	Yes	Yes	Yes	Yes	Yes	Yes	Yes	Yes	Yes
Standard Deviation of Penetration for Each Channel :						0.04	0.04	0.03	0.04	0.04	0.04	0.03	0.04	0.06	0.04	0.05	0.07	0.13	0.08	0.10
Data Quality Objective:						<0.10	<0.10	<0.10	<0.10	<0.10	<0.10	<0.10	<0.10	<0.10	< 0.30	< 0.30	< 0.30	< 0.30	< 0.30	< 0.30
Does this meet DQO:						Yes	Yes	Yes	Yes	Yes	Yes	Yes	Yes	Yes	Yes	Yes	Yes	Yes	Yes	Yes
Maximum observed particle concentration (#/cc):						14.4														
Data Quality Objective: max. allowable conc. (#/cc):						< 23														
Does this meet the DQO:						Yes, (applies to all channels)														

Test No. 03249911
Arrestor
Solid-Phase

Particle Counts per Indicated OPC Channel (1-Minute Samples @ 7.1 L/min)

OPC Channel Number						1	2	3	4	5	6	7	8	9	10	11	12	13	14	15
Min. Diam. (um)						0.45	0.59	0.73	0.80	1.02	1.44	1.86	2.28	2.85	3.13	4.25	5.66	7.07	7.77	9.88
Max. Diam. (um)						0.59	0.73	0.80	1.02	1.44	1.86	2.28	2.85	3.13	4.25	5.66	7.07	7.77	9.88	14.10
Geo. Mean Diam (um)						0.52	0.66	0.77	0.90	1.21	1.64	2.06	2.55	2.98	3.65	4.91	6.33	7.41	8.76	11.81
ENTER DATA BELOW																				
U. Bckgrnd	1	01	03-24-1999	17:10:18	01:00	3	1	0	0	0	0	1	1	0	0	1	0	0	0	0
Upstream	1	01	03-24-1999	17:19:10	01:00	10490	15580	5007	8836	13150	8403	10750	10050	2494	5264	3166	1098	192	285	206
Upstream	1	01	03-24-1999	17:21:40	01:00	10740	16040	5110	9239	13620	8365	11190	10480	2403	5319	3226	1156	200	348	219
Upstream	1	01	03-24-1999	17:24:10	01:00	10460	15430	4929	8853	13180	8173	10790	9934	2337	5289	3098	1114	187	307	202
Upstream	1	01	03-24-1999	17:26:40	01:00	10190	15500	4965	8942	13210	8220	10760	9908	2298	5123	3105	1072	211	286	223
Upstream	1	01	03-24-1999	17:29:10	01:00	10560	15520	4885	9025	13360	8306	10830	9927	2403	5133	3199	1087	183	298	173
Upstream	1	01	03-24-1999	17:31:40	01:00	10390	15430	4978	8976	13120	8330	10860	10310	2343	5218	3092	1100	179	286	186
Upstream	1	01	03-24-1999	17:34:10	01:00	10020	14640	4730	8602	12980	7897	10490	9833	2296	5141	3098	1139	161	307	190
Upstream	1	01	03-24-1999	17:36:40	01:00	10550	15540	4965	9076	13460	8454	10940	10310	2402	5311	3276	1132	181	311	218
Upstream	1	01	03-24-1999	17:39:10	01:00	10340	15100	4860	8798	13040	8052	10630	10050	2444	5344	3326	1151	212	311	211
Upstream	1	01	03-24-1999	17:41:40	01:00	10230	15320	5043	9149	13400	8155	10710	10270	2435	5239	3327	1121	205	352	197
U. Bckgrnd	1	01	03-24-1999	17:51:03	01:00	0	0	0	1	0	0	0	0	0	0	1	0	0	0	0
ENTER DATA BELOW																				
D. Bckgrnd	2	01	03-24-1999	17:11:33	01:00	3	0	1	0	2	0	0	1	2	1	0	0	0	0	0
Downstream	2	01	03-24-1999	17:20:25	01:00	1913	2137	593	824	846	308	223	110	9	14	6	2	0	0	0
Downstream	2	01	03-24-1999	17:22:55	01:00	1880	2254	545	806	822	303	235	114	7	13	5	4	0	0	0
Downstream	2	01	03-24-1999	17:25:25	01:00	1915	2249	521	809	800	286	208	110	13	16	3	1	0	0	0
Downstream	2	01	03-24-1999	17:27:55	01:00	1909	2267	527	800	790	323	241	88	9	15	7	0	0	0	0
Downstream	2	01	03-24-1999	17:30:25	01:00	1787	2078	539	709	740	258	205	70	15	14	3	0	0	0	1
Downstream	2	01	03-24-1999	17:32:55	01:00	1750	2100	531	754	687	292	184	77	4	16	6	3	0	0	0
Downstream	2	01	03-24-1999	17:35:25	01:00	1740	2138	550	735	794	282	225	91	13	9	3	1	0	0	0
Downstream	2	01	03-24-1999	17:37:55	01:00	1843	2089	492	799	771	287	218	103	15	16	3	1	0	0	0
Downstream	2	01	03-24-1999	17:40:25	01:00	1760	2189	574	828	787	317	220	106	16	9	6	1	0	0	1
Downstream	2	01	03-24-1999	17:42:55	01:00	1736	2150	554	813	804	295	257	113	16	16	7	2	0	0	0
D. Bckgrnd	2	01	03-24-1999	17:52:18	01:00	2	1	1	0	0	1	1	0	0	0	0	0	0	0	0
Meas. Penetration						0.18	0.14	0.11	0.09	0.06	0.04	0.02	0.01	0.00	0.00	0.00	0.00	0.00	0.00	0.00
P100 correction values						1.00	1.00	1.01	1.00	1.01	1.00	0.99	1.01	1.03	1.04	1.04	1.04	0.99	0.94	0.94
Corrected Penetration						0.17	0.14	0.11	0.09	0.06	0.04	0.02	0.01	0.00	0.00	0.00	0.00	0.00	0.00	0.00
Corrected Efficiency (%)						83	86	89	91	94	96	98	99	100	100	100	100	100	100	100

Data Acceptance Criteria:

Total Challenge Counts for Each Channel:	103970	154100	49472	89496	132520	82355	107950	101072	23855	52381	31913	11170	1911	3091	2025
Data Quality Objective:	> 500	> 500	> 500	> 500	> 500	> 500	> 500	> 500	> 500	> 500	> 500	> 500	> 500	> 500	> 500
Does this meet DQO:	Yes	Yes	Yes	Yes	Yes	Yes	Yes	Yes	Yes	Yes	Yes	Yes	Yes	Yes	Yes
Standard Deviation of Penetration for Each Channel :	0.01	0.01	0.01	0.00	0.00	0.00	0.00	0.00	0.00	0.00	0.00	0.00	0.00	0.00	0.00
Data Quality Objective:	<0.10	<0.10	<0.10	<0.10	<0.10	<0.10	<0.10	<0.10	<0.10	< 0.30	< 0.30	< 0.30	< 0.30	< 0.30	< 0.30
Does this meet DQO:	Yes	Yes	Yes	Yes	Yes	Yes	Yes	Yes	Yes	Yes	Yes	Yes	Yes	Yes	Yes

Maximum observed particle concentration (#/cc): 13.8
Data Quality Objective: max. allowable conc. (#/cc): < 23
Does this meet the DQO: Yes, (applies to all channels)

Test No. 03259901
No Filter
Solid-Phase

Particle Counts per Indicated OPC Channel (1-Minute Samples @ 7.1 L/min)

OPC Channel Number						1	2	3	4	5	6	7	8	9	10	11	12	13	14	15
Min. Diam. (um)						0.45	0.59	0.73	0.80	1.02	1.44	1.86	2.28	2.85	3.13	4.25	5.66	7.07	7.77	9.88
Max. Diam. (um)						0.59	0.73	0.80	1.02	1.44	1.86	2.28	2.85	3.13	4.25	5.66	7.07	7.77	9.88	14.10
Geo. Mean Diam (um)						0.52	0.66	0.77	0.90	1.21	1.64	2.06	2.55	2.98	3.65	4.91	6.33	7.41	8.76	11.81
ENTER DATA BELOW																				
U. Bckgrnd	1	01	03-25-1999	06:39:05	01:00	0	0	0	0	0	0	0	0	0	0	0	0	0	0	0
Upstream	1	01	03-25-1999	06:48:11	01:00	11160	16240	5176	9687	14100	8765	11400	10660	2580	5485	3398	1219	215	311	221
Upstream	1	01	03-25-1999	06:50:41	01:00	11090	16810	5362	9849	14380	8979	11720	10580	2474	5428	3414	1163	177	331	244
Upstream	1	01	03-25-1999	06:53:11	01:00	11330	16560	5302	9819	14560	8855	11570	10470	2480	5459	3452	1135	225	335	210
Upstream	1	01	03-25-1999	06:55:41	01:00	10980	16360	5294	9512	13930	8637	11460	10370	2494	5465	3370	1125	175	326	235
Upstream	1	01	03-25-1999	06:58:11	01:00	10860	16230	5152	9303	13780	8400	11260	10200	2413	5300	3263	1139	182	292	201
Upstream	1	01	03-25-1999	07:00:41	01:00	10920	16520	5299	9332	13770	8710	11310	10270	2512	5300	3114	1160	196	303	223
Upstream	1	01	03-25-1999	07:03:11	01:00	10530	15510	4953	8913	13370	8388	10920	9862	2312	5047	3075	1057	175	314	205
Upstream	1	01	03-25-1999	07:05:41	01:00	10770	16280	5084	9305	13580	8515	11240	10090	2484	5241	3179	1122	187	307	219
Upstream	1	01	03-25-1999	07:08:11	01:00	10960	16390	5153	9303	13780	8637	11250	10080	2418	5234	3190	1139	190	316	220
Upstream	1	01	03-25-1999	07:10:41	01:00	10750	16010	5114	9426	13840	8645	11470	10160	2455	5180	3243	1090	183	310	207
U. Bckgrnd	1	01	03-25-1999	07:21:24	01:00	1	2	0	0	1	0	0	0	0	0	0	0	0	0	0
ENTER DATA BELOW																				
D. Bckgrnd	2	01	03-25-1999	06:40:20	01:00	1	0	1	3	0	0	1	0	1	1	0	0	0	0	0
Downstream	2	01	03-25-1999	06:49:26	01:00	10960	16390	5293	9561	14170	9079	11840	10810	2556	5427	3528	1169	211	337	203
Downstream	2	01	03-25-1999	06:51:56	01:00	11240	16730	5314	9781	14390	8789	11710	10740	2394	5556	3511	1165	190	314	218
Downstream	2	01	03-25-1999	06:54:26	01:00	11160	16680	5230	9636	14280	8871	11650	10470	2487	5379	3410	1167	174	328	202
Downstream	2	01	03-25-1999	06:56:56	01:00	11120	16530	5217	9352	13810	8800	11600	10350	2508	5437	3423	1155	209	329	215
Downstream	2	01	03-25-1999	06:59:26	01:00	10980	16420	5314	9431	13910	8714	11530	10480	2455	5559	3461	1145	228	330	212
Downstream	2	01	03-25-1999	07:01:56	01:00	10830	16170	5087	9308	13760	8550	11390	10190	2417	5398	3329	1135	208	310	202
Downstream	2	01	03-25-1999	07:04:26	01:00	10940	16020	5135	9137	13760	8664	11220	10160	2378	5415	3306	1126	183	278	210
Downstream	2	01	03-25-1999	07:06:56	01:00	10970	16390	5203	9300	14110	8516	11370	10390	2524	5415	3307	1135	197	284	193
Downstream	2	01	03-25-1999	07:09:26	01:00	10900	16190	5133	9354	13890	8710	11310	10200	2362	5269	3184	1106	201	284	194
Downstream	2	01	03-25-1999	07:11:56	01:00	11260	16400	5133	9346	14480	8885	11430	10150	2355	5322	3328	1102	202	282	200
D. Bckgrnd	2	01	03-25-1999	07:22:39	01:00	1	0	0	0	0	0	0	0	0	0	0	0	0	0	0
Meas. Penetration						1.01	1.01	1.00	1.00	1.01	1.01	1.01	1.01	0.99	1.02	1.03	1.00	1.05	0.98	0.94
P100 correction values						1.00	1.00	1.00	1.00	1.00	1.00	1.00	1.00	1.00	1.00	1.00	1.00	1.00	1.00	1.00
Corrected Penetration						1.01	1.01	1.00	1.00	1.01	1.01	1.01	1.01	0.99	1.02	1.03	1.00	1.05	0.98	0.94
Corrected Efficiency (%)						-1	-1	0	0	-1	-1	-1	-1	1	-2	-3	0	-5	2	6

Data Acceptance Criteria:

Total Challenge Counts for Each Channel:	109350	162910	51889	94449	139090	86531	113600	102742	24622	53139	32698	11349	1905	3145	2185
Data Quality Objective:	> 500	> 500	> 500	> 500	> 500	> 500	> 500	> 500	> 500	> 500	> 500	> 500	> 500	> 500	> 500
Does this meet DQO:	Yes	Yes	Yes	Yes	Yes	Yes	Yes	Yes	Yes	Yes	Yes	Yes	Yes	Yes	Yes
Standard Deviation of Penetration for Each Channel :	0.02	0.03	0.03	0.04	0.03	0.03	0.03	0.03	0.04	0.03	0.05	0.04	0.12	0.08	0.07
Data Quality Objective:	<0.10	<0.10	<0.10	<0.10	<0.10	<0.10	<0.10	<0.10	<0.10	< 0.30	< 0.30	< 0.30	< 0.30	< 0.30	< 0.30
Does this meet DQO:	Yes	Yes	Yes	Yes	Yes	Yes	Yes	Yes	Yes	Yes	Yes	Yes	Yes	Yes	Yes

Maximum observed particle concentration (#/cc):	14.4
Data Quality Objective: max. allowable conc. (#/cc):	< 23
Does this meet the DQO:	Yes, (applies to all channels)

Test No. 03259902
Arrestor
Solid-Phase

Particle Counts per Indicated OPC Channel (1-Minute Samples @ 7.1 L/min)

OPC Channel Number						1	2	3	4	5	6	7	8	9	10	11	12	13	14	15
Min. Diam. (um)						0.45	0.59	0.73	0.80	1.02	1.44	1.86	2.28	2.85	3.13	4.25	5.66	7.07	7.77	9.88
Max. Diam. (um)						0.59	0.73	0.80	1.02	1.44	1.86	2.28	2.85	3.13	4.25	5.66	7.07	7.77	9.88	14.10
Geo. Mean Diam (um)						0.52	0.66	0.77	0.90	1.21	1.64	2.06	2.55	2.98	3.65	4.91	6.33	7.41	8.76	11.81
ENTER DATA BELOW																				
U. Bckgrnd	1	01	03-25-1999	07:35:22	01:00	0	0	0	0	0	0	0	0	0	0	0	0	0	0	0
Upstream	1	01	03-25-1999	07:46:25	01:00	9642	13950	4467	8153	12000	7393	9673	9227	2107	4718	2905	983	207	320	176
Upstream	1	01	03-25-1999	07:48:55	01:00	9418	13810	4301	7877	11610	7064	9489	8867	2115	4546	2897	1007	158	327	212
Upstream	1	01	03-25-1999	07:51:25	01:00	9535	13800	4489	8065	11870	7138	9745	9010	2148	4677	2974	1024	196	284	214
Upstream	1	01	03-25-1999	07:53:55	01:00	9422	14040	4385	7952	11760	7171	9526	8859	2101	4641	2840	1036	152	300	212
Upstream	1	01	03-25-1999	07:56:25	01:00	9594	13970	4352	7913	11830	7210	9542	9027	2143	4610	2888	1035	181	294	214
Upstream	1	01	03-25-1999	07:58:55	01:00	9692	14130	4422	8036	12020	7291	9856	9004	2143	4642	2908	1047	175	263	211
Upstream	1	01	03-25-1999	08:01:25	01:00	9127	13420	4120	7454	11080	6945	9101	8105	1931	4247	2617	915	147	242	168
Upstream	1	01	03-25-1999	08:03:55	01:00	10070	14530	4631	8502	12440	7763	10060	8792	2067	4403	2757	997	157	285	187
Upstream	1	01	03-25-1999	08:06:25	01:00	9977	14810	4669	8117	12210	7549	9966	8927	2107	4650	2887	1008	187	303	176
Upstream	1	01	03-25-1999	08:08:55	01:00	10020	14790	4690	8393	12440	7694	10300	9155	2162	4624	2892	1046	187	294	210
U. Bckgrnd	1	01	03-25-1999	08:25:37	01:00	2	0	0	0	0	0	0	0	0	0	0	0	0	0	0
ENTER DATA BELOW																				
D. Bckgrnd	2	01	03-25-1999	07:36:37	01:00	1	0	0	1	0	0	0	0	0	0	0	0	0	0	0
Downstream	2	01	03-25-1999	07:47:40	01:00	1779	2153	539	868	842	285	232	98	11	15	0	0	0	0	0
Downstream	2	01	03-25-1999	07:50:10	01:00	1781	2110	510	783	808	321	229	93	8	18	4	1	0	0	0
Downstream	2	01	03-25-1999	07:52:40	01:00	1849	2149	524	735	805	304	222	100	7	13	8	0	0	1	1
Downstream	2	01	03-25-1999	07:55:10	01:00	1769	2126	514	777	782	317	223	95	9	16	3	2	0	1	1
Downstream	2	01	03-25-1999	07:57:40	01:00	1704	2036	478	702	792	272	242	73	13	7	0	2	0	0	0
Downstream	2	01	03-25-1999	08:00:10	01:00	1684	2002	507	700	691	248	206	79	11	13	5	1	0	0	0
Downstream	2	01	03-25-1999	08:02:40	01:00	1733	1977	489	683	702	243	175	81	10	13	2	0	0	0	0
Downstream	2	01	03-25-1999	08:05:10	01:00	1715	1973	449	706	628	287	200	81	12	10	3	0	0	0	0
Downstream	2	01	03-25-1999	08:07:40	01:00	1784	2103	525	767	772	257	196	89	9	7	4	1	0	0	0
Downstream	2	01	03-25-1999	08:10:10	01:00	1930	2225	541	797	790	268	202	87	14	13	5	2	0	0	0
D. Bckgrnd	2	01	03-25-1999	08:26:52	01:00	0	0	0	1	0	1	0	0	0	0	0	0	0	0	0
Meas. Penetration						0.18	0.15	0.11	0.09	0.06	0.04	0.02	0.01	0.00	0.00	0.00	0.00	0.00	0.00	0.00
P100 correction values						1.01	1.01	1.00	1.00	1.01	1.01	1.01	1.01	0.99	1.02	1.03	1.00	1.05	0.98	0.94
Corrected Penetration						0.18	0.15	0.11	0.09	0.06	0.04	0.02	0.01	0.00	0.00	0.00	0.00	0.00	0.00	0.00
Corrected Efficiency (%)						82	85	89	91	94	96	98	99	100	100	100	100	100	100	100
Data Acceptance Criteria:																				
Total Challenge Counts for Each Channel:						96497	141250	44526	80462	119260	73218	97258	88973	21024	45758	28565	10098	1747	2912	1980
Data Quality Objective:						> 500	> 500	> 500	> 500	> 500	> 500	> 500	> 500	> 500	> 500	> 500	> 500	> 500	> 500	> 500
Does this meet DQO:						Yes	Yes	Yes	Yes	Yes	Yes	Yes	Yes	Yes	Yes	Yes	Yes	Yes	Yes	Yes
Standard Deviation of Penetration for Each Channel :						0.01	0.01	0.01	0.01	0.01	0.00	0.00	0.00	0.00	0.00	0.00	0.00	0.00	0.00	0.00
Data Quality Objective:						<0.10	<0.10	<0.10	<0.10	<0.10	<0.10	<0.10	<0.10	<0.10	< 0.30	< 0.30	< 0.30	< 0.30	< 0.30	< 0.30
Does this meet DQO:						Yes	Yes	Yes	Yes	Yes	Yes	Yes	Yes	Yes	Yes	Yes	Yes	Yes	Yes	Yes
Maximum observed particle concentration (#/cc):						12.6														
Data Quality Objective: max. allowable conc. (#/cc):						< 23														
Does this meet the DQO:						Yes, (applies to all channels)														

Test No. 03259903
No Filter
Solid-Phase

Particle Counts per Indicated OPC Channel (1-Minute Samples @ 7.1 L/min)

OPC Channel Number						1	2	3	4	5	6	7	8	9	10	11	12	13	14	15
Min. Diam. (um)						0.45	0.59	0.73	0.80	1.02	1.44	1.86	2.28	2.85	3.13	4.25	5.66	7.07	7.77	9.88
Max. Diam. (um)						0.59	0.73	0.80	1.02	1.44	1.86	2.28	2.85	3.13	4.25	5.66	7.07	7.77	9.88	14.10
Geo. Mean Diam (um)						0.52	0.66	0.77	0.90	1.21	1.64	2.06	2.55	2.98	3.65	4.91	6.33	7.41	8.76	11.81
ENTER DATA BELOW																				
U. Bckgrnd	1	01	03-25-1999	08:39:50	01:00	0	0	0	0	0	0	0	0	0	0	0	0	0	0	0
Upstream	1	01	03-25-1999	08:49:17	01:00	10710	15720	4976	8891	13130	8030	10740	9306	2244	5051	3008	1036	173	327	212
Upstream	1	01	03-25-1999	08:51:47	01:00	10680	15730	4964	9006	13260	8265	10680	9697	2253	4907	3093	1081	198	312	226
Upstream	1	01	03-25-1999	08:54:17	01:00	10610	15840	5060	8796	13170	8078	10800	9551	2254	4984	3019	1095	178	335	195
Upstream	1	01	03-25-1999	08:56:47	01:00	10850	16080	5078	8852	13360	8267	10760	9695	2301	5037	3206	1078	162	308	197
Upstream	1	01	03-25-1999	08:59:17	01:00	10740	16120	5075	8962	13500	8096	10820	9892	2343	5046	3086	1098	198	296	210
Upstream	1	01	03-25-1999	09:01:47	01:00	10820	16170	5143	9040	13280	8324	10870	9802	2365	5005	3059	1108	179	295	213
Upstream	1	01	03-25-1999	09:04:17	01:00	10520	15720	4792	9105	13660	8323	10840	10080	2489	5207	3193	1202	207	351	222
Upstream	1	01	03-25-1999	09:06:47	01:00	10770	15840	5116	9150	13550	8364	11100	10310	2436	5332	3259	1207	203	343	221
Upstream	1	01	03-25-1999	09:09:17	01:00	11110	16210	5149	9163	13780	8430	11110	10480	2475	5450	3420	1241	214	334	253
Upstream	1	01	03-25-1999	09:11:47	01:00	11330	16600	5519	9790	14130	8597	11420	10960	2697	5785	3491	1259	215	395	251
U. Bckgrnd	1	01	03-25-1999	09:20:33	01:00	10	0	0	2	1	1	1	4	0	1	1	0	0	0	0
ENTER DATA BELOW																				
D. Bckgrnd	2	01	03-25-1999	08:41:05	01:00	2	0	0	0	0	1	0	0	0	0	0	0	0	0	0
Downstream	2	01	03-25-1999	08:50:32	01:00	10350	15630	4822	8948	13360	8016	10680	9725	2295	5115	3141	1052	186	300	201
Downstream	2	01	03-25-1999	08:53:02	01:00	10550	15760	4858	8729	13020	8145	10710	9697	2337	5142	3116	1046	156	246	210
Downstream	2	01	03-25-1999	08:55:32	01:00	10890	15850	5050	8770	13320	8300	10760	9962	2297	5035	3174	1078	178	310	194
Downstream	2	01	03-25-1999	08:58:02	01:00	10770	15860	5095	9017	13340	8344	10660	9956	2324	5065	3179	1106	182	314	214
Downstream	2	01	03-25-1999	09:00:32	01:00	10640	15900	5107	8918	13420	8225	10710	9702	2439	5087	3223	1092	158	313	191
Downstream	2	01	03-25-1999	09:03:02	01:00	10820	15900	4920	9065	13430	8331	10780	9706	2202	5101	3077	1103	214	304	200
Downstream	2	01	03-25-1999	09:05:32	01:00	10920	16170	5086	9290	14000	8598	11230	10380	2492	5398	3404	1173	214	314	221
Downstream	2	01	03-25-1999	09:08:02	01:00	10850	15900	5139	9167	13550	8481	10990	10330	2533	5412	3465	1248	208	374	239
Downstream	2	01	03-25-1999	09:10:32	01:00	10940	16160	5163	9402	14080	8665	11260	10810	2634	5650	3551	1272	212	332	227
Downstream	2	01	03-25-1999	09:13:02	01:00	11590	16880	5538	9887	14570	9117	11690	11130	2644	5910	3683	1375	205	367	247
D. Bckgrnd	2	01	03-25-1999	09:21:48	01:00	0	0	0	1	1	0	0	0	0	0	0	0	0	0	0
Meas. Penetration						1.00	1.00	1.00	1.00	1.01	1.02	1.00	1.02	1.01	1.02	1.04	1.01	0.99	0.96	0.97
P100 correction values						1.00	1.00	1.00	1.00	1.00	1.00	1.00	1.00	1.00	1.00	1.00	1.00	1.00	1.00	1.00
Corrected Penetration						1.00	1.00	1.00	1.00	1.01	1.02	1.00	1.02	1.01	1.02	1.04	1.01	0.99	0.96	0.97
Corrected Efficiency (%)						0	0	0	0	-1	-2	0	-2	-1	-2	-4	-1	1	4	3
Data Acceptance Criteria:																				
Total Challenge Counts for Each Channel:						108140	160030	50872	90755	134820	82774	109140	99773	23857	51804	31834	11405	1927	3296	2200
Data Quality Objective:						> 500	> 500	> 500	> 500	> 500	> 500	> 500	> 500	> 500	> 500	> 500	> 500	> 500	> 500	> 500
Does this meet DQO:						Yes	Yes	Yes	Yes	Yes	Yes	Yes	Yes	Yes	Yes	Yes	Yes	Yes	Yes	Yes
Standard Deviation of Penetration for Each Channel :						0.04	0.03	0.05	0.05	0.04	0.04	0.04	0.07	0.09	0.08	0.09	0.12	0.15	0.14	0.12
Data Quality Objective:						<0.10	<0.10	<0.10	<0.10	<0.10	<0.10	<0.10	<0.10	<0.10	< 0.30	< 0.30	< 0.30	< 0.30	< 0.30	< 0.30
Does this meet DQO:						Yes	Yes	Yes	Yes	Yes	Yes	Yes	Yes	Yes	Yes	Yes	Yes	Yes	Yes	Yes
Maximum observed particle concentration (#/cc):						14.8														
Data Quality Objective: max. allowable conc. (#/cc):						< 23														
Does this meet the DQO:						Yes, (applies to all channels)														

Test No. 03259904
Arrestor
Solid-Phase

Particle Counts per Indicated OPC Channel (1-Minute Samples @ 7.1 L/min)

OPC Channel Number						1	2	3	4	5	6	7	8	9	10	11	12	13	14	15
Min. Diam. (um)						0.45	0.59	0.73	0.80	1.02	1.44	1.86	2.28	2.85	3.13	4.25	5.66	7.07	7.77	9.88
Max. Diam. (um)						0.59	0.73	0.80	1.02	1.44	1.86	2.28	2.85	3.13	4.25	5.66	7.07	7.77	9.88	14.10
Geo. Mean Diam (um)						0.52	0.66	0.77	0.90	1.21	1.64	2.06	2.55	2.98	3.65	4.91	6.33	7.41	8.76	11.81
ENTER DATA BELOW																				
U. Bckgrnd	1	01	03-25-1999	09:38:06	01:00	1	0	0	2	0	0	0	0	0	0	0	2	0	0	0
Upstream	1	01	03-25-1999	09:52:05	01:00	10570	15630	4952	9144	13260	8144	10850	9962	2304	5121	3197	1125	184	314	209
Upstream	1	01	03-25-1999	09:54:35	01:00	10520	15470	4892	9160	13550	8389	11010	9867	2304	5160	3178	1072	210	302	249
Upstream	1	01	03-25-1999	09:57:05	01:00	10430	15600	4960	9070	13280	8316	10740	9748	2288	5061	3136	1168	196	319	208
Upstream	1	01	03-25-1999	09:59:35	01:00	10210	15160	4849	8861	12870	8120	10620	9702	2314	4952	3145	1112	197	303	218
Upstream	1	01	03-25-1999	10:02:05	01:00	10020	15390	4851	8594	12750	8087	10710	9666	2204	4980	3201	1091	194	299	226
Upstream	1	01	03-25-1999	10:04:35	01:00	10340	15120	4806	8691	12910	8086	10550	9432	2388	4900	3082	1061	183	296	198
Upstream	1	01	03-25-1999	10:07:05	01:00	9914	14860	4755	8702	12580	7705	10310	9319	2317	4818	3123	1059	155	329	218
Upstream	1	01	03-25-1999	10:09:35	01:00	10410	15070	4797	8572	12790	8027	10500	9345	2294	4957	3006	1128	163	325	190
Upstream	1	01	03-25-1999	10:12:05	01:00	10330	14990	4874	8785	12920	8023	10460	9630	2207	4999	3187	1092	196	293	224
Upstream	1	01	03-25-1999	10:14:35	01:00	10260	15110	4816	8651	12840	7941	10510	9617	2272	4964	3043	1048	183	294	193
U. Bckgrnd	1	01	03-25-1999	10:25:29	01:00	0	0	0	0	0	0	0	0	0	0	0	0	0	0	0
ENTER DATA BELOW																				
D. Bckgrnd	2	01	03-25-1999	09:39:21	01:00	12	7	1	2	4	1	0	0	0	0	0	0	0	0	0
Downstream	2	01	03-25-1999	09:53:20	01:00	1249	1373	344	485	429	141	117	65	9	6	7	0	0	0	0
Downstream	2	01	03-25-1999	09:55:50	01:00	1315	1399	327	474	424	160	120	69	6	8	7	2	0	0	1
Downstream	2	01	03-25-1999	09:58:20	01:00	1238	1430	323	469	424	165	110	58	10	15	6	4	1	0	0
Downstream	2	01	03-25-1999	10:00:50	01:00	1297	1506	343	515	498	170	128	60	9	9	2	1	0	0	0
Downstream	2	01	03-25-1999	10:03:20	01:00	1378	1500	310	515	477	184	128	61	7	7	5	0	1	0	0
Downstream	2	01	03-25-1999	10:05:50	01:00	1380	1465	354	508	487	158	119	47	15	10	1	0	0	1	0
Downstream	2	01	03-25-1999	10:08:20	01:00	1326	1422	366	563	498	152	103	40	14	11	1	2	1	0	0
Downstream	2	01	03-25-1999	10:10:50	01:00	1245	1338	315	445	442	141	120	53	6	17	3	4	0	0	0
Downstream	2	01	03-25-1999	10:13:20	01:00	1175	1340	322	445	446	163	136	52	11	16	6	1	0	0	0
Downstream	2	01	03-25-1999	10:15:50	01:00	1265	1370	329	481	425	178	128	48	5	7	2	1	0	1	1
D. Bckgrnd	2	01	03-25-1999	10:26:44	01:00	0	0	0	0	0	0	0	0	0	0	0	0	0	0	0
Meas. Penetration						0.12	0.09	0.07	0.06	0.03	0.02	0.01	0.01	0.00	0.00	0.00	0.00	0.00	0.00	0.00
P100 correction values						1.00	1.00	1.00	1.00	1.01	1.02	1.00	1.02	1.01	1.02	1.04	1.01	0.99	0.96	0.97
Corrected Penetration						0.12	0.09	0.07	0.06	0.03	0.02	0.01	0.01	0.00	0.00	0.00	0.00	0.00	0.00	0.00
Corrected Efficiency (%)						88	91	93	94	97	98	99	99	100	100	100	100	100	100	100

Data Acceptance Criteria:

Total Challenge Counts for Each Channel:	103004	152400	48552	88230	129750	80838	106260	96288	22892	49912	31298	10956	1861	3074	2133
Data Quality Objective:	> 500	> 500	> 500	> 500	> 500	> 500	> 500	> 500	> 500	> 500	> 500	> 500	> 500	> 500	> 500
Does this meet DQO:	Yes	Yes	Yes	Yes	Yes	Yes	Yes	Yes	Yes	Yes	Yes	Yes	Yes	Yes	Yes
Standard Deviation of Penetration for Each Channel :	0.01	0.00	0.00	0.00	0.00	0.00	0.00	0.00	0.00	0.00	0.00	0.00	0.00	0.00	0.00
Data Quality Objective:	<0.10	<0.10	<0.10	<0.10	<0.10	<0.10	<0.10	<0.10	<0.10	< 0.30	< 0.30	< 0.30	< 0.30	< 0.30	< 0.30
Does this meet DQO:	Yes	Yes	Yes	Yes	Yes	Yes	Yes	Yes	Yes	Yes	Yes	Yes	Yes	Yes	Yes

Maximum observed particle concentration (#/cc): 13.5
Data Quality Objective: max. allowable conc. (#/cc): < 23
Does this meet the DQO: Yes, (applies to all channels)

Test No. 03199907
HEPA
Solid-Phase

Particle Counts per Indicated OPC Channel (1-Minute Samples @ 7.1 L/min)

OPC Channel Number						1	2	3	4	5	6	7	8	9	10	11	12	13	14	15
Min. Diam. (um)						0.45	0.59	0.73	0.80	1.02	1.44	1.86	2.28	2.85	3.13	4.25	5.66	7.07	7.77	9.88
Max. Diam. (um)						0.59	0.73	0.80	1.02	1.44	1.86	2.28	2.85	3.13	4.25	5.66	7.07	7.77	9.88	14.10
Geo. Mean Diam (um)						0.52	0.66	0.77	0.90	1.21	1.64	2.06	2.55	2.98	3.65	4.91	6.33	7.41	8.76	11.81
ENTER DATA BELOW																				
U. Bckgrnd	1	01	03-19-1999	15:11:42	01:00	0	1	1	0	0	0	0	0	0	0	0	0	0	0	0
Upstream	1	01	03-19-1999	15:34:44	01:00	9558	14460	4529	8619	12920	7855	10470	9988	2389	5321	3340	1174	206	321	220
Upstream	1	01	03-19-1999	15:37:14	01:00	9784	14750	4659	8822	12880	8039	10430	10150	2448	5317	3422	1194	229	361	232
Upstream	1	01	03-19-1999	15:39:44	01:00	10100	14900	4827	8789	13110	8021	10580	9856	2371	5123	3179	1093	172	296	197
Upstream	1	01	03-19-1999	15:42:14	01:00	9926	14660	4826	8672	13010	7868	10500	9587	2309	5132	3218	1092	188	290	218
Upstream	1	01	03-19-1999	15:44:44	01:00	9948	14910	4765	8825	12960	8107	10550	9900	2368	5199	3165	1131	187	316	237
Upstream	1	01	03-19-1999	15:47:14	01:00	9782	14550	4628	8573	12630	7937	10340	9606	2306	5071	3154	1040	185	273	231
Upstream	1	01	03-19-1999	15:49:44	01:00	9777	14490	4571	8414	12700	7857	10320	9575	2303	4991	3260	1107	205	306	235
Upstream	1	01	03-19-1999	15:52:14	01:00	9655	14440	4469	8363	12640	7587	10110	9601	2210	5105	3077	1103	171	304	211
Upstream	1	01	03-19-1999	15:54:44	01:00	9846	14680	4671	8496	12920	7871	10060	9577	2335	4940	3279	1100	176	300	202
Upstream	1	01	03-19-1999	15:57:14	01:00	9861	14680	4627	8797	13030	7914	10530	9722	2318	5114	3173	1093	184	318	186
U. Bckgrnd	1	01	03-19-1999	16:06:17	01:00	2	1	0	0	0	0	0	0	0	0	0	0	0	0	0
ENTER DATA BELOW																				
D. Bckgrnd	2	01	03-19-1999	15:12:57	01:00	0	0	0	0	0	0	0	1	0	0	0	0	0	0	0
Downstream	2	01	03-19-1999	15:35:59	01:00	4	7	4	3	4	7	9	6	2	4	1	1	0	2	0
Downstream	2	01	03-19-1999	15:38:29	01:00	9	9	2	2	6	3	7	1	3	4	1	0	0	0	0
Downstream	2	01	03-19-1999	15:40:59	01:00	8	6	1	6	4	9	3	9	1	0	2	0	0	0	0
Downstream	2	01	03-19-1999	15:43:29	01:00	3	3	0	5	11	2	2	5	1	0	2	0	1	0	0
Downstream	2	01	03-19-1999	15:45:59	01:00	9	11	3	10	8	1	7	6	2	1	0	1	0	0	0
Downstream	2	01	03-19-1999	15:48:29	01:00	16	19	9	13	8	5	3	2	0	3	2	0	0	0	0
Downstream	2	01	03-19-1999	15:50:59	01:00	7	5	0	2	7	4	0	1	2	3	2	0	0	0	0
Downstream	2	01	03-19-1999	15:53:29	01:00	3	5	3	5	8	3	4	4	0	1	3	0	0	0	0
Downstream	2	01	03-19-1999	15:55:59	01:00	2	7	2	6	6	9	5	4	1	0	0	0	0	1	0
Downstream	2	01	03-19-1999	15:58:29	01:00	6	6	2	3	2	4	4	2	0	2	3	0	0	0	1
D. Bckgrnd	2	01	03-19-1999	16:07:32	01:00	3	5	0	0	1	3	0	0	0	0	0	1	0	0	1
Meas. Penetration						0.00	0.00	0.00	0.00	0.00	0.00	0.00	0.00	0.00	0.00	0.00	0.00	0.00	0.00	0.00
P100 correction values						1.01	1.00	0.98	0.99	1.00	1.00	0.99	1.01	1.03	1.03	1.03	1.04	0.94	1.00	0.97
Corrected Penetration						0.00	0.00	0.00	0.00	0.00	0.00	0.00	0.00	0.00	0.00	0.00	0.00	0.00	0.00	0.00
Corrected Efficiency (%)						100	100	100	100	100	100	100	100	100	100	100	100	100	100	100

Data Acceptance Criteria:

Total Challenge Counts for Each Channel:	98237	146520	46572	86370	128800	79056	103890	97562	23357	51313	32267	11127	1903	3085	2169
Data Quality Objective:	> 500	> 500	> 500	> 500	> 500	> 500	> 500	> 500	> 500	> 500	> 500	> 500	> 500	> 500	> 500
Does this meet DQO:	Yes	Yes	Yes	Yes	Yes	Yes	Yes	Yes	Yes	Yes	Yes	Yes	Yes	Yes	Yes
Standard Deviation of Penetration for Each Channel :	0.00	0.00	0.00	0.00	0.00	0.00	0.00	0.00	0.00	0.00	0.00	0.00	0.00	0.00	-0.01
Data Quality Objective:	<0.10	<0.10	<0.10	<0.10	<0.10	<0.10	<0.10	<0.10	<0.10	< 0.30	< 0.30	< 0.30	< 0.30	< 0.30	< 0.30
Does this meet DQO:	Yes	Yes	Yes	Yes	Yes	Yes	Yes	Yes	Yes	Yes	Yes	Yes	Yes	Yes	Yes

Maximum observed particle concentration (#/cc): 13.1
Data Quality Objective: max. allowable conc. (#/cc): < 23
Does this meet the DQO: Yes, (applies to all channels)

Test No. 03259905
No Filter
Liquid-Phase

Particle Counts per Indicated OPC Channel (1-Minute Samples @ 7.1 L/min)

OPC Channel Number						1	2	3	4	5	6	7	8	9	10	11	12	13	14	15
Min. Diam. (um)						0.28	0.37	0.47	0.52	0.66	0.94	1.22	1.51	1.88	2.07	2.83	3.77	4.71	5.18	6.60
Max. Diam. (um)						0.37	0.47	0.52	0.66	0.94	1.22	1.51	1.88	2.07	2.83	3.77	4.71	5.18	6.60	9.43
Geo. Mean Diam (um)						0.32	0.42	0.49	0.58	0.78	1.07	1.36	1.68	1.97	2.42	3.26	4.21	4.94	5.85	7.89
ENTER DATA BELOW																				
U. Bckgrnd	1	01	03-25-1999	10:36:09	01:00	0	3	0	1	0	0	0	0	0	0	0	0	0	0	0
Upstream	1	01	03-25-1999	10:48:52	01:00	9499	14470	5072	9771	14230	10050	17370	13580	2699	6210	3809	1138	208	328	180
Upstream	1	01	03-25-1999	10:51:22	01:00	9304	14290	5120	9655	14180	9991	17330	13740	2629	6126	3797	1095	175	319	183
Upstream	1	01	03-25-1999	10:53:52	01:00	9326	14020	5112	9758	14180	9976	17310	13650	2598	6127	3858	1117	169	290	209
Upstream	1	01	03-25-1999	10:56:22	01:00	9187	14580	4998	9792	14130	10070	17220	13530	2651	6299	3885	1100	204	275	196
Upstream	1	01	03-25-1999	10:58:52	01:00	9478	14510	5196	9888	14450	10360	17960	13910	2754	6502	3865	1173	201	299	204
Upstream	1	01	03-25-1999	11:01:22	01:00	9850	14680	5150	9998	14830	10560	17810	14040	2796	6345	3942	1206	198	312	185
Upstream	1	01	03-25-1999	11:03:52	01:00	9122	13860	5021	9250	13540	9954	16790	12100	2421	5782	3430	980	182	267	154
Upstream	1	01	03-25-1999	11:06:22	01:00	9525	14610	5295	9608	14160	10640	17350	12530	2542	6008	3628	1070	176	285	170
Upstream	1	01	03-25-1999	11:08:52	01:00	9748	14970	5267	9833	14550	10660	17900	13070	2607	6169	3563	1130	184	276	164
Upstream	1	01	03-25-1999	11:11:22	01:00	9379	14970	5398	9706	14420	10630	17720	12720	2461	6153	3470	965	164	270	172
U. Bckgrnd	1	01	03-25-1999	11:21:20	01:00	0	0	0	0	0	0	0	0	0	0	0	0	0	0	0
ENTER DATA BELOW																				
D. Bckgrnd	2	01	03-25-1999	10:37:24	01:00	1	0	0	0	0	0	0	0	0	0	0	0	0	0	0
Downstream	2	01	03-25-1999	10:50:07	01:00	9177	14170	5126	9540	14310	10160	17330	13420	2744	6340	4003	1131	186	306	214
Downstream	2	01	03-25-1999	10:52:37	01:00	9222	14340	4976	9731	14480	10000	17500	13360	2584	6090	3928	1104	200	279	186
Downstream	2	01	03-25-1999	10:55:07	01:00	9320	14080	5051	9709	14150	10140	17430	13760	2588	6380	4055	1175	213	306	186
Downstream	2	01	03-25-1999	10:57:37	01:00	9423	14290	5207	9656	14450	10360	17550	13630	2641	6376	4022	1205	178	331	189
Downstream	2	01	03-25-1999	11:00:07	01:00	9292	14390	5292	9868	14420	10060	17650	13600	2713	6481	3995	1201	213	308	209
Downstream	2	01	03-25-1999	11:02:37	01:00	9487	14740	5067	9843	14530	10390	17580	13950	2747	6448	4054	1193	192	340	192
Downstream	2	01	03-25-1999	11:05:07	01:00	9625	14850	5271	9728	14580	10680	17820	13020	2632	6282	3825	1149	193	272	178
Downstream	2	01	03-25-1999	11:07:37	01:00	9569	14740	5157	9538	14370	10320	17750	12860	2536	6166	3691	1120	181	262	169
Downstream	2	01	03-25-1999	11:10:07	01:00	9599	14840	5277	9644	14270	10560	17540	12680	2620	6260	3654	1033	186	287	165
Downstream	2	01	03-25-1999	11:12:37	01:00	9434	14460	5226	9544	14500	10550	17730	12340	2686	6098	3689	1088	207	266	156
D. Bckgrnd	2	01	03-25-1999	11:22:35	01:00	0	0	0	0	0	0	0	0	0	0	0	0	0	0	0
Meas. Penetration						1.00	1.00	1.00	1.00	1.01	1.00	1.01	1.00	1.01	1.02	1.04	1.04	1.05	1.01	1.01
P100 correction values						1.00	1.00	1.00	1.00	1.00	1.00	1.00	1.00	1.00	1.00	1.00	1.00	1.00	1.00	1.00
Corrected Penetration						1.00	1.00	1.00	1.00	1.01	1.00	1.01	1.00	1.01	1.02	1.04	1.04	1.05	1.01	1.01
Corrected Efficiency (%)						0	0	0	0	-1	0	-1	0	-1	-2	-4	-4	-5	-1	-1
Data Acceptance Criteria:																				
Total Challenge Counts for Each Channel:						94418	144960	51629	97259	142670	102891	174760	132870	26158	61721	37247	10974	1861	2921	1817
Data Quality Objective:						> 500	> 500	> 500	> 500	> 500	> 500	> 500	> 500	> 500	> 500	> 500	> 500	> 500	> 500	> 500
Does this meet DQO:						Yes	Yes	Yes	Yes	Yes	Yes	Yes	Yes	Yes	Yes	Yes	Yes	Yes	Yes	Yes
Standard Deviation of Penetration for Each Channel :						0.03	0.03	0.03	0.02	0.03	0.04	0.02	0.06	0.05	0.04	0.07	0.09	0.11	0.12	0.14
Data Quality Objective:						<0.10	<0.10	<0.10	<0.10	<0.10	<0.10	<0.10	<0.10	<0.10	< 0.10	< 0.30	< 0.30	< 0.30	< 0.30	< 0.30
Does this meet DQO:						Yes	Yes	Yes	Yes	Yes	Yes	Yes	Yes	Yes	Yes	Yes	Yes	Yes	Yes	Yes
Maximum observed particle concentration (#/cc):						15.8														
Data Quality Objective: max. allowable conc. (#/cc):						< 23														
Does this meet the DQO:						Yes, (applies to all channels)														

Test No. 03259906
Arrestor
Liquid-Phase

Particle Counts per Indicated OPC Channel (1-Minute Samples @ 7.1 L/min)

OPC Channel Number						1	2	3	4	5	6	7	8	9	10	11	12	13	14	15
Min. Diam. (um)						0.28	0.37	0.47	0.52	0.66	0.94	1.22	1.51	1.88	2.07	2.83	3.77	4.71	5.18	6.60
Max. Diam. (um)						0.37	0.47	0.52	0.66	0.94	1.22	1.51	1.88	2.07	2.83	3.77	4.71	5.18	6.60	9.43
Geo. Mean Diam (um)						0.32	0.42	0.49	0.58	0.78	1.07	1.36	1.68	1.97	2.42	3.26	4.21	4.94	5.85	7.89
ENTER DATA BELOW																				
U. Bckgrnd	1	01	03-25-1999	11:32:05	01:00	0	0	0	0	1	0	0	0	0	0	0	0	0	0	0
Upstream	1	01	03-25-1999	11:41:02	01:00	9794	15060	5369	10080	14780	10650	17990	13190	2587	6230	3852	1133	187	312	194
Upstream	1	01	03-25-1999	11:43:32	01:00	9688	15180	5299	9855	14540	10760	17800	12860	2567	6129	3713	1139	187	299	176
Upstream	1	01	03-25-1999	11:46:02	01:00	9738	14710	5415	9646	14610	10550	17790	13050	2621	6101	3645	1089	186	299	144
Upstream	1	01	03-25-1999	11:48:32	01:00	9472	14610	5378	9757	14370	10540	17650	12910	2611	6083	3672	1119	178	282	194
Upstream	1	01	03-25-1999	11:51:02	01:00	9365	14650	5448	9576	14440	10300	17440	12820	2666	6032	3623	1066	199	273	176
Upstream	1	01	03-25-1999	11:53:32	01:00	9576	14480	5217	9590	14180	10350	17510	12690	2566	6077	3645	1087	164	286	176
Upstream	1	01	03-25-1999	11:56:02	01:00	8095	12450	4582	8429	12560	8726	15130	11160	2246	5403	3252	948	134	261	145
Upstream	1	01	03-25-1999	11:58:32	01:00	9564	14530	5304	9731	14430	10260	17690	13550	2645	6261	3756	1146	211	317	188
Upstream	1	01	03-25-1999	12:01:02	01:00	9591	14280	5198	9545	14170	10250	17430	13390	2581	6307	3822	1117	169	316	178
Upstream	1	01	03-25-1999	12:03:32	01:00	9132	13740	4940	9210	13760	9869	16730	12500	2393	5839	3564	1043	166	287	191
U. Bckgrnd	1	01	03-25-1999	12:12:51	01:00	1	5	2	0	2	1	0	1	0	0	0	0	0	0	0
ENTER DATA BELOW																				
D. Bckgrnd	2	01	03-25-1999	11:33:20	01:00	0	0	0	0	0	0	0	0	0	0	0	0	0	0	0
Downstream	2	01	03-25-1999	11:42:17	01:00	2553	3632	1159	1917	2078	1053	879	209	10	20	5	1	0	0	0
Downstream	2	01	03-25-1999	11:44:47	01:00	2583	3523	1117	1880	1957	946	890	243	15	17	2	1	0	0	0
Downstream	2	01	03-25-1999	11:47:17	01:00	2559	3651	1129	1826	2046	961	877	214	15	20	7	0	1	0	0
Downstream	2	01	03-25-1999	11:49:47	01:00	2493	3465	1162	1799	2053	948	897	208	12	21	7	0	0	0	0
Downstream	2	01	03-25-1999	11:52:17	01:00	2510	3438	1169	1865	2023	1009	895	198	24	24	3	1	0	1	0
Downstream	2	01	03-25-1999	11:54:47	01:00	2525	3495	1068	1798	1933	1019	829	203	15	18	3	0	0	0	0
Downstream	2	01	03-25-1999	11:57:17	01:00	2563	3427	1127	1834	2026	932	958	203	17	22	9	1	0	1	0
Downstream	2	01	03-25-1999	11:59:47	01:00	2597	3401	1075	1803	2048	957	864	207	14	22	3	1	0	0	0
Downstream	2	01	03-25-1999	12:02:17	01:00	2442	3449	1103	1806	1960	969	850	221	13	13	2	0	0	0	0
Downstream	2	01	03-25-1999	12:04:47	01:00	2476	3367	1098	1846	1897	981	879	214	12	24	4	0	0	0	0
D. Bckgrnd	2	01	03-25-1999	12:14:06	01:00	0	0	0	0	0	0	0	0	0	0	0	0	0	0	0
Meas. Penetration						0.27	0.24	0.21	0.19	0.14	0.10	0.05	0.02	0.01	0.00	0.00	0.00	0.00	0.00	0.00
P100 correction values						1.00	1.00	1.00	1.00	1.01	1.00	1.01	1.00	1.01	1.02	1.04	1.04	1.05	1.01	1.01
Corrected Penetration						0.27	0.24	0.21	0.19	0.14	0.10	0.05	0.02	0.01	0.00	0.00	0.00	0.00	0.00	0.00
Corrected Efficiency (%)						73	76	79	81	86	90	95	98	99	100	100	100	100	100	100
Data Acceptance Criteria:																				
Total Challenge Counts for Each Channel:						94015	143690	52150	95419	141840	102255	173160	128120	25483	60462	36544	10887	1781	2932	1762
Data Quality Objective:						> 500	> 500	> 500	> 500	> 500	> 500	> 500	> 500	> 500	> 500	> 500	> 500	> 500	> 500	> 500
Does this meet DQO:						Yes	Yes	Yes	Yes	Yes	Yes	Yes	Yes	Yes	Yes	Yes	Yes	Yes	Yes	Yes
Standard Deviation of Penetration for Each Channel :						0.02	0.01	0.01	0.01	0.01	0.01	0.00	0.00	0.00	0.00	0.00	0.00	0.00	0.00	0.00
Data Quality Objective:						<0.10	<0.10	<0.10	<0.10	<0.10	<0.10	<0.10	<0.10	<0.10	< 0.10	< 0.30	< 0.30	< 0.30	< 0.30	< 0.30
Does this meet DQO:						Yes	Yes	Yes	Yes	Yes	Yes	Yes	Yes	Yes	Yes	Yes	Yes	Yes	Yes	Yes
Maximum observed particle concentration (#/cc):						15.7														
Data Quality Objective: max. allowable conc. (#/cc):						< 23														
Does this meet the DQO:						Yes, (applies to all channels)														

Test No. 03259907
No Filter
Liquid-Phase

Particle Counts per Indicated OPC Channel (1-Minute Samples @ 7.1 L/min)

OPC Channel Number						1	2	3	4	5	6	7	8	9	10	11	12	13	14	15
Min. Diam. (um)						0.28	0.37	0.47	0.52	0.66	0.94	1.22	1.51	1.88	2.07	2.83	3.77	4.71	5.18	6.60
Max. Diam. (um)						0.37	0.47	0.52	0.66	0.94	1.22	1.51	1.88	2.07	2.83	3.77	4.71	5.18	6.60	9.43
Geo. Mean Diam (um)						0.32	0.42	0.49	0.58	0.78	1.07	1.36	1.68	1.97	2.42	3.26	4.21	4.94	5.85	7.89
ENTER DATA BELOW																				
U. Bckgrnd	1	01	03-25-1999	12:26:18	01:00	0	0	0	0	0	0	0	0	0	0	0	0	0	0	0
Upstream	1	01	03-25-1999	12:35:18	01:00	10210	15230	5470	10760	15640	10930	18730	15170	2928	6976	4213	1337	212	371	210
Upstream	1	01	03-25-1999	12:37:48	01:00	9880	14970	5343	10110	14760	10350	18160	14500	2706	6499	3995	1145	190	325	192
Upstream	1	01	03-25-1999	12:40:18	01:00	9980	15210	5381	10370	15130	10620	18210	14650	2755	6646	4087	1133	203	308	227
Upstream	1	01	03-25-1999	12:42:48	01:00	9778	14930	5361	10480	15040	10750	18260	14630	2892	6671	4277	1181	218	341	218
Upstream	1	01	03-25-1999	12:45:18	01:00	10010	15210	5456	10370	15480	10820	18810	15060	2896	6747	4164	1252	209	333	230
Upstream	1	01	03-25-1999	12:47:48	01:00	10210	15660	5726	10780	15460	11100	19100	15100	2959	6878	4275	1243	226	365	247
Upstream	1	01	03-25-1999	12:50:18	01:00	9390	14420	5080	9509	13800	10040	16720	13080	2496	6095	3674	1151	178	315	184
Upstream	1	01	03-25-1999	12:52:48	01:00	10240	15710	5621	10450	15390	10940	18900	14450	2816	6772	4080	1223	204	331	186
Upstream	1	01	03-25-1999	12:55:18	01:00	10050	15250	5543	10530	15200	10640	18420	14700	2863	6730	4149	1203	220	351	198
Upstream	1	01	03-25-1999	12:57:48	01:00	10140	15390	5602	10390	15380	10800	18690	14810	2855	6735	4135	1241	210	355	238
U. Bckgrnd	1	01	03-25-1999	13:06:16	01:00	0	0	0	0	0	0	0	0	0	0	0	0	0	0	0
ENTER DATA BELOW																				
D. Bckgrnd	2	01	03-25-1999	12:27:33	01:00	1	1	0	0	1	0	0	1	0	0	0	0	0	0	0
Downstream	2	01	03-25-1999	12:36:33	01:00	9898	14980	5295	10210	15030	10520	18140	14780	3071	6818	4265	1279	234	358	235
Downstream	2	01	03-25-1999	12:39:03	01:00	9725	14990	5446	10130	15150	10540	18250	14240	2806	6809	4156	1201	198	351	219
Downstream	2	01	03-25-1999	12:41:33	01:00	9950	15080	5445	10150	14880	10440	18260	14510	2760	6870	4307	1304	199	345	217
Downstream	2	01	03-25-1999	12:44:03	01:00	10000	15110	5437	10190	15220	10630	18170	14920	2751	6746	4430	1217	225	352	199
Downstream	2	01	03-25-1999	12:46:33	01:00	10160	15030	5378	10340	15240	10820	18780	14890	2916	6800	4356	1348	213	357	238
Downstream	2	01	03-25-1999	12:49:03	01:00	10020	14960	5441	10490	15400	11100	18470	15010	2921	6889	4513	1304	221	370	192
Downstream	2	01	03-25-1999	12:51:33	01:00	9987	15090	5447	10120	15080	10650	18500	14100	2864	6768	4152	1243	205	321	172
Downstream	2	01	03-25-1999	12:54:03	01:00	9918	15260	5500	10310	15160	10770	18800	14320	2875	6735	4167	1297	204	356	216
Downstream	2	01	03-25-1999	12:56:33	01:00	9892	15280	5464	10320	14980	10830	18670	14440	2838	6830	4276	1332	222	351	225
Downstream	2	01	03-25-1999	12:59:03	01:00	9978	15210	5557	10480	15320	10790	18890	15020	3016	6884	4354	1305	215	369	246
D. Bckgrnd	2	01	03-25-1999	13:07:31	01:00	0	0	0	0	0	0	0	0	0	0	0	0	0	0	0
Meas. Penetration						1.00	0.99	1.00	0.99	1.00	1.00	1.01	1.00	1.02	1.02	1.05	1.06	1.03	1.04	1.01
P100 correction values						1.00	1.00	1.00	1.00	1.00	1.00	1.00	1.00	1.00	1.00	1.00	1.00	1.00	1.00	1.00
Corrected Penetration						1.00	0.99	1.00	0.99	1.00	1.00	1.01	1.00	1.02	1.02	1.05	1.06	1.03	1.04	1.01
Corrected Efficiency (%)						0	1	0	1	0	0	-1	0	-2	-2	-5	-6	-3	-4	-1
Data Acceptance Criteria:																				
Total Challenge Counts for Each Channel:						99888	151980	54583	103749	151280	106990	184000	146150	28166	66749	41049	12109	2070	3395	2130
Data Quality Objective:						> 500	> 500	> 500	> 500	> 500	> 500	> 500	> 500	> 500	> 500	> 500	> 500	> 500	> 500	> 500
Does this meet DQO:						Yes	Yes	Yes	Yes	Yes	Yes	Yes	Yes	Yes	Yes	Yes	Yes	Yes	Yes	Yes
Standard Deviation of Penetration for Each Channel :						0.03	0.03	0.04	0.04	0.04	0.03	0.04	0.05	0.06	0.04	0.05	0.07	0.09	0.08	0.15
Data Quality Objective:						<0.10	<0.10	<0.10	<0.10	<0.10	<0.10	<0.10	<0.10	<0.10	< 0.10	< 0.30	< 0.30	< 0.30	< 0.30	< 0.30
Does this meet DQO:						Yes	Yes	Yes	Yes	Yes	Yes	Yes	Yes	Yes	Yes	Yes	Yes	Yes	Yes	Yes
Maximum observed particle concentration (#/cc):						16.9														
Data Quality Objective: max. allowable conc. (#/cc):						< 23														
Does this meet the DQO:						Yes, (applies to all channels)														

Test No. 03259908
Arrestor
Liquid-Phase

Particle Counts per Indicated OPC Channel (1-Minute Samples @ 7.1 L/min)

OPC Channel Number						1	2	3	4	5	6	7	8	9	10	11	12	13	14	15
Min. Diam. (um)						0.28	0.37	0.47	0.52	0.66	0.94	1.22	1.51	1.88	2.07	2.83	3.77	4.71	5.18	6.60
Max. Diam. (um)						0.37	0.47	0.52	0.66	0.94	1.22	1.51	1.88	2.07	2.83	3.77	4.71	5.18	6.60	9.43
Geo. Mean Diam (um)						0.32	0.42	0.49	0.58	0.78	1.07	1.36	1.68	1.97	2.42	3.26	4.21	4.94	5.85	7.89
ENTER DATA BELOW																				
U. Bckgrnd	1	01	03-25-1999	13:20:50	01:00	0	0	0	0	0	0	0	0	0	0	0	0	0	0	0
Upstream	1	01	03-25-1999	13:31:06	01:00	10100	15290	5433	10080	15380	10580	18520	14830	2883	6602	4205	1284	208	308	220
Upstream	1	01	03-25-1999	13:33:36	01:00	9731	15120	5256	10170	15100	10760	18060	14670	2898	6730	4116	1222	218	334	242
Upstream	1	01	03-25-1999	13:36:06	01:00	9874	15190	5409	10230	15100	10610	18120	14490	2910	6748	4188	1254	201	362	210
Upstream	1	01	03-25-1999	13:38:36	01:00	10090	15630	5478	10690	15710	11010	19050	15070	2859	6893	4414	1269	232	344	230
Upstream	1	01	03-25-1999	13:41:06	01:00	10210	15450	5590	10580	15400	10690	18920	15010	2939	6836	4243	1311	196	381	211
Upstream	1	01	03-25-1999	13:43:36	01:00	10120	15590	5563	10650	15670	11190	18900	15140	2991	7020	4203	1313	231	366	226
Upstream	1	01	03-25-1999	13:46:06	01:00	9544	14630	5138	9752	14490	10600	17850	13340	2641	6008	3769	1106	172	272	205
Upstream	1	01	03-25-1999	13:48:36	01:00	10690	16410	5832	10850	15900	11750	19820	14490	2952	6921	4181	1228	205	327	191
Upstream	1	01	03-25-1999	13:51:06	01:00	10720	16490	5980	11000	16240	11860	19840	14340	2923	6868	4166	1239	199	313	208
Upstream	1	01	03-25-1999	13:53:36	01:00	11050	16820	5987	11180	16570	11990	20060	15050	2898	7177	4265	1279	218	336	186
U. Bckgrnd	1	01	03-25-1999	14:01:32	01:00	0	0	0	0	0	0	0	0	0	0	0	0	0	0	0
ENTER DATA BELOW																				
D. Bckgrnd	2	01	03-25-1999	13:22:05	01:00	0	0	0	1	0	0	0	0	0	0	0	0	0	0	0
Downstream	2	01	03-25-1999	13:32:21	01:00	3013	4294	1419	2443	2748	1477	1438	494	29	35	3	0	0	0	0
Downstream	2	01	03-25-1999	13:34:51	01:00	3121	4151	1352	2437	2898	1501	1422	458	37	43	6	0	0	1	0
Downstream	2	01	03-25-1999	13:37:21	01:00	3107	4262	1414	2345	2757	1394	1474	478	41	30	8	2	0	0	0
Downstream	2	01	03-25-1999	13:39:51	01:00	2965	4095	1368	2440	2752	1320	1431	422	30	46	6	2	0	0	0
Downstream	2	01	03-25-1999	13:42:21	01:00	3002	4085	1359	2443	2797	1360	1409	436	38	50	10	0	0	0	0
Downstream	2	01	03-25-1999	13:44:51	01:00	2972	4247	1346	2288	2736	1407	1437	442	25	34	7	0	0	0	0
Downstream	2	01	03-25-1999	13:47:21	01:00	3044	4377	1420	2384	2582	1326	1358	388	27	48	8	0	0	0	0
Downstream	2	01	03-25-1999	13:49:51	01:00	3343	4584	1419	2439	2685	1416	1374	388	32	37	9	2	0	0	0
Downstream	2	01	03-25-1999	13:52:21	01:00	3297	4537	1499	2534	2862	1434	1404	426	29	30	6	0	0	1	0
Downstream	2	01	03-25-1999	13:54:51	01:00	3199	4480	1406	2526	2854	1390	1458	400	32	37	3	0	0	1	0
D. Bckgrnd	2	01	03-25-1999	14:02:47	01:00	0	0	0	0	0	0	0	0	0	0	0	0	0	0	0
Meas. Penetration						0.30	0.28	0.25	0.23	0.18	0.13	0.08	0.03	0.01	0.01	0.00	0.00	0.00	0.00	0.00
P100 correction values						1.00	0.99	1.00	0.99	1.00	1.00	1.01	1.00	1.02	1.02	1.05	1.06	1.03	1.04	1.01
Corrected Penetration						0.31	0.28	0.25	0.23	0.18	0.13	0.07	0.03	0.01	0.01	0.00	0.00	0.00	0.00	0.00
Corrected Efficiency (%)						69	72	75	77	82	87	93	97	99	99	100	100	100	100	100
Data Acceptance Criteria:																				
Total Challenge Counts for Each Channel:						102129	156620	55666	105182	155560	111040	189140	146430	28894	67803	41750	12505	2080	3343	2129
Data Quality Objective:						> 500	> 500	> 500	> 500	> 500	> 500	> 500	> 500	> 500	> 500	> 500	> 500	> 500	> 500	> 500
Does this meet DQO:						Yes	Yes	Yes	Yes	Yes	Yes	Yes	Yes	Yes	Yes	Yes	Yes	Yes	Yes	Yes
Standard Deviation of Penetration for Each Channel :						0.02	0.02	0.02	0.01	0.01	0.01	0.00	0.00	0.00	0.00	0.00	0.00	0.00	0.00	0.00
Data Quality Objective:						<0.10	<0.10	<0.10	<0.10	<0.10	<0.10	<0.10	<0.10	<0.10	< 0.10	< 0.30	< 0.30	< 0.30	< 0.30	< 0.30
Does this meet DQO:						Yes	Yes	Yes	Yes	Yes	Yes	Yes	Yes	Yes	Yes	Yes	Yes	Yes	Yes	Yes
Maximum observed particle concentration (#/cc):						17.7														
Data Quality Objective: max. allowable conc. (#/cc):						< 23														
Does this meet the DQO:						Yes, (applies to all channels)														

Test No. 03259909
No Filter
Liquid-Phase

Particle Counts per Indicated OPC Channel (1-Minute Samples @ 7.1 L/min)

OPC Channel Number						1	2	3	4	5	6	7	8	9	10	11	12	13	14	15
Min. Diam. (um)						0.28	0.37	0.47	0.52	0.66	0.94	1.22	1.51	1.88	2.07	2.83	3.77	4.71	5.18	6.60
Max. Diam. (um)						0.37	0.47	0.52	0.66	0.94	1.22	1.51	1.88	2.07	2.83	3.77	4.71	5.18	6.60	9.43
Geo. Mean Diam (um)						0.32	0.42	0.49	0.58	0.78	1.07	1.36	1.68	1.97	2.42	3.26	4.21	4.94	5.85	7.89
ENTER DATA BELOW																				
U. Bckgrnd	1	01	03-25-1999	14:27:51	01:00	0	0	0	0	0	0	0	0	0	0	0	0	0	0	0
Upstream	1	01	03-25-1999	14:39:13	01:00	10140	15620	5613	10280	15160	11060	18610	14100	2738	6675	4057	1198	222	294	215
Upstream	1	01	03-25-1999	14:41:43	01:00	10030	15540	5458	10140	15240	10930	18560	13570	2710	6515	3898	1172	197	295	172
Upstream	1	01	03-25-1999	14:44:13	01:00	9798	14820	5462	10070	14900	10760	17880	13790	2746	6356	3854	1099	209	309	204
Upstream	1	01	03-25-1999	14:46:43	01:00	9835	15200	5544	10020	14960	10740	18080	13460	2722	6424	3824	1132	208	339	196
Upstream	1	01	03-25-1999	14:49:13	01:00	9746	15040	5356	10040	14850	10620	18090	13620	2738	6522	3886	1155	210	338	207
Upstream	1	01	03-25-1999	14:51:43	01:00	9745	15040	5274	9885	14990	10510	18100	13880	2630	6517	3959	1206	187	329	191
Upstream	1	01	03-25-1999	14:54:13	01:00	9189	14070	4959	9399	13990	9915	16950	13330	2559	6351	3849	1138	207	331	218
Upstream	1	01	03-25-1999	14:56:43	01:00	9937	15300	5417	10170	15260	10710	18310	15000	2876	6680	4298	1246	234	343	220
Upstream	1	01	03-25-1999	14:59:13	01:00	9948	14910	5332	10120	14940	10510	18330	14670	2883	6813	4128	1286	177	326	240
Upstream	1	01	03-25-1999	15:01:43	01:00	10140	15190	5384	10080	15200	10840	18760	14800	2936	6781	4265	1269	204	354	233
U. Bckgrnd	1	01	03-25-1999	15:12:45	01:00	0	0	0	0	0	0	0	0	0	0	0	0	0	0	0
ENTER DATA BELOW																				
D. Bckgrnd	2	01	03-25-1999	14:29:06	01:00	1	0	11	2	0	1	0	1	0	0	0	1	0	0	0
Downstream	2	01	03-25-1999	14:40:28	01:00	10200	15580	5477	10340	15010	11300	18700	13800	2693	6476	4187	1263	214	314	219
Downstream	2	01	03-25-1999	14:42:58	01:00	9897	15100	5443	10090	14770	10760	18630	13660	2761	6601	4100	1233	199	330	189
Downstream	2	01	03-25-1999	14:45:28	01:00	9838	15210	5285	10080	15190	10880	18380	13800	2771	6633	4089	1228	177	298	191
Downstream	2	01	03-25-1999	14:47:58	01:00	9638	14760	5381	9863	14570	10450	18020	13330	2726	6436	3960	1163	191	321	201
Downstream	2	01	03-25-1999	14:50:28	01:00	9453	14780	5349	9927	14670	10380	17730	13430	2701	6421	4102	1172	190	327	211
Downstream	2	01	03-25-1999	14:52:58	01:00	9755	14770	5175	9766	14870	10590	18240	13810	2742	6514	4226	1255	204	357	214
Downstream	2	01	03-25-1999	14:55:28	01:00	9859	15120	5390	10210	15190	10680	18090	14840	2910	6848	4424	1257	247	354	222
Downstream	2	01	03-25-1999	14:57:58	01:00	9731	14980	5210	9975	15150	10360	18030	14410	2838	6667	4259	1341	223	356	187
Downstream	2	01	03-25-1999	15:00:28	01:00	9825	14970	5304	10240	15070	10680	18420	14670	2887	6850	4404	1283	236	342	204
Downstream	2	01	03-25-1999	15:02:58	01:00	9475	15170	5237	10040	15110	10560	18410	14200	2879	6813	4251	1281	208	354	201
D. Bckgrnd	2	01	03-25-1999	15:14:00	01:00	0	0	0	0	0	0	0	0	0	0	0	0	0	0	0
Meas. Penetration						0.99	1.00	0.99	1.00	1.00	1.00	1.01	1.00	1.01	1.01	1.05	1.05	1.02	1.03	0.97
P100 correction values						1.00	1.00	1.00	1.00	1.00	1.00	1.00	1.00	1.00	1.00	1.00	1.00	1.00	1.00	1.00
Corrected Penetration						0.99	1.00	0.99	1.00	1.00	1.00	1.01	1.00	1.01	1.01	1.05	1.05	1.02	1.03	0.97
Corrected Efficiency (%)						1	0	1	0	0	0	-1	0	-1	-1	-5	-5	-2	-3	3
Data Acceptance Criteria:																				
Total Challenge Counts for Each Channel:						98508	150730	53799	100204	149490	106595	181670	140220	27538	65634	40018	11901	2055	3258	2096
Data Quality Objective:						> 500	> 500	> 500	> 500	> 500	> 500	> 500	> 500	> 500	> 500	> 500	> 500	> 500	> 500	> 500
Does this meet DQO:						Yes	Yes	Yes	Yes	Yes	Yes	Yes	Yes	Yes	Yes	Yes	Yes	Yes	Yes	Yes
Standard Deviation of Penetration for Each Channel :						0.04	0.03	0.04	0.03	0.03	0.04	0.03	0.06	0.05	0.04	0.06	0.07	0.13	0.09	0.11
Data Quality Objective:						<0.10	<0.10	<0.10	<0.10	<0.10	<0.10	<0.10	<0.10	<0.10	< 0.10	< 0.30	< 0.30	< 0.30	< 0.30	< 0.30
Does this meet DQO:						Yes	Yes	Yes	Yes	Yes	Yes	Yes	Yes	Yes	Yes	Yes	Yes	Yes	Yes	Yes
Maximum observed particle concentration (#/cc):						16.5														
Data Quality Objective: max. allowable conc. (#/cc):						< 23														
Does this meet the DQO:						Yes, (applies to all channels)														

Test No. 03259910
Arrestor
Liquid-Phase

Particle Counts per Indicated OPC Channel (1-Minute Samples @ 7.1 L/min)

OPC Channel Number						1	2	3	4	5	6	7	8	9	10	11	12	13	14	15
Min. Diam. (um)						0.28	0.37	0.47	0.52	0.66	0.94	1.22	1.51	1.88	2.07	2.83	3.77	4.71	5.18	6.60
Max. Diam. (um)						0.37	0.47	0.52	0.66	0.94	1.22	1.51	1.88	2.07	2.83	3.77	4.71	5.18	6.60	9.43
Geo. Mean Diam (um)						0.32	0.42	0.49	0.58	0.78	1.07	1.36	1.68	1.97	2.42	3.26	4.21	4.94	5.85	7.89
ENTER DATA BELOW																				
U. Bckgrnd	1	01	03-25-1999	15:40:21	01:00	0	0	0	0	0	0	0	0	0	0	0	0	0	0	0
Upstream	1	01	03-25-1999	15:56:52	01:00	10120	15670	5482	10210	15320	11160	18770	14070	2660	6725	3976	1171	203	316	220
Upstream	1	01	03-25-1999	15:59:22	01:00	10190	15670	5414	10190	15200	10740	18440	13730	2738	6562	3875	1203	200	302	188
Upstream	1	01	03-25-1999	16:01:52	01:00	10270	15560	5592	10370	15260	10870	18890	14050	2822	6488	4018	1194	196	375	191
Upstream	1	01	03-25-1999	16:04:22	01:00	9963	15470	5282	10080	15120	10980	18220	13780	2668	6564	3920	1158	203	317	206
Upstream	1	01	03-25-1999	16:06:52	01:00	9993	15200	5476	10310	15270	10980	18690	14140	2729	6573	3954	1174	188	343	199
Upstream	1	01	03-25-1999	16:09:22	01:00	10280	15400	5636	10280	15080	11120	18740	14450	2863	6836	4073	1210	188	323	207
Upstream	1	01	03-25-1999	16:11:52	01:00	8809	13460	4649	9226	13520	9434	16280	13390	2567	6035	3788	1127	191	300	213
Upstream	1	01	03-25-1999	16:14:22	01:00	10020	15330	5389	10470	15550	10660	18660	15290	2909	6898	4278	1232	212	375	223
Upstream	1	01	03-25-1999	16:16:52	01:00	10010	15330	5512	10400	15310	10880	18540	15160	2965	6877	4285	1229	211	378	238
Upstream	1	01	03-25-1999	16:19:22	01:00	9953	15400	5423	10260	15300	10650	18470	15150	2887	6872	4253	1235	206	385	209
U. Bckgrnd	1	01	03-25-1999	16:27:49	01:00	2	0	0	0	0	0	0	0	0	0	0	0	0	0	0
ENTER DATA BELOW																				
D. Bckgrnd	2	01	03-25-1999	15:41:36	01:00	0	0	0	0	0	0	0	0	0	0	0	0	0	0	0
Downstream	2	01	03-25-1999	15:58:07	01:00	2993	4297	1400	2404	2626	1356	1281	344	31	31	12	0	0	0	0
Downstream	2	01	03-25-1999	16:00:37	01:00	3135	4175	1354	2361	2533	1292	1252	339	28	38	13	0	0	0	0
Downstream	2	01	03-25-1999	16:03:07	01:00	2964	4113	1299	2243	2557	1255	1289	326	33	36	9	0	0	0	0
Downstream	2	01	03-25-1999	16:05:37	01:00	2979	4213	1388	2309	2596	1294	1297	344	38	52	12	3	0	1	0
Downstream	2	01	03-25-1999	16:08:07	01:00	2855	4007	1312	2272	2501	1247	1158	403	24	37	10	0	0	1	0
Downstream	2	01	03-25-1999	16:10:37	01:00	2991	4104	1322	2331	2530	1326	1236	359	38	38	19	0	0	0	0
Downstream	2	01	03-25-1999	16:13:07	01:00	2891	3999	1250	2310	2605	1237	1341	426	23	50	14	2	0	0	0
Downstream	2	01	03-25-1999	16:15:37	01:00	2916	4036	1275	2282	2600	1220	1307	400	34	41	9	2	0	1	0
Downstream	2	01	03-25-1999	16:18:07	01:00	2954	4220	1290	2318	2703	1311	1253	430	31	53	8	2	0	0	0
Downstream	2	01	03-25-1999	16:20:37	01:00	2847	4035	1323	2221	2558	1227	1306	397	30	39	11	0	0	0	0
D. Bckgrnd	2	01	03-25-1999	16:29:04	01:00	0	0	0	0	0	0	0	0	0	0	0	0	0	0	0
Meas. Penetration						0.30	0.27	0.25	0.23	0.17	0.12	0.07	0.03	0.01	0.01	0.00	0.00	0.00	0.00	0.00
P100 correction values						0.99	1.00	0.99	1.00	1.00	1.00	1.01	1.00	1.01	1.01	1.05	1.05	1.02	1.03	0.97
Corrected Penetration						0.30	0.27	0.25	0.23	0.17	0.12	0.07	0.03	0.01	0.01	0.00	0.00	0.00	0.00	0.00
Corrected Efficiency (%)						70	73	75	77	83	88	93	97	99	99	100	100	100	100	100
Data Acceptance Criteria:																				
Total Challenge Counts for Each Channel:						99608	152490	53855	101796	150930	107474	183700	143210	27808	66430	40420	11933	1998	3414	2094
Data Quality Objective:						> 500	> 500	> 500	> 500	> 500	> 500	> 500	> 500	> 500	> 500	> 500	> 500	> 500	> 500	> 500
Does this meet DQO:						Yes	Yes	Yes	Yes	Yes	Yes	Yes	Yes	Yes	Yes	Yes	Yes	Yes	Yes	Yes
Standard Deviation of Penetration for Each Channel :						0.02	0.01	0.02	0.01	0.01	0.01	0.00	0.00	0.00	0.00	0.00	0.00	0.00	0.00	0.00
Data Quality Objective:						<0.10	<0.10	<0.10	<0.10	<0.10	<0.10	<0.10	<0.10	<0.10	< 0.10	< 0.30	< 0.30	< 0.30	< 0.30	< 0.30
Does this meet DQO:						Yes	Yes	Yes	Yes	Yes	Yes	Yes	Yes	Yes	Yes	Yes	Yes	Yes	Yes	Yes
Maximum observed particle concentration (#/cc):						16.6														
Data Quality Objective: max. allowable conc. (#/cc):						< 23														
Does this meet the DQO:						Yes, (applies to all channels)														