July 1999

Environmental Technology Verification Report

Paint Overspray Arrestor Purolator Products Air Filtration Co. D95084415, DMK80-4404, and PB2424

Prepared by

Research Triangle Institute

Under a Cooperative Agreement with

U.S. Environmental Protection Agency

July 1999

Environmental Technology Verification Report

Paint Overspray Arrestor

Purolator Products Air Filtration Co. D95084415, DMK80-4404, and PB2424

Prepared by

Kathleen Owen
James Hanley
Jack Farmer
Air Pollution Control Technology Program
Research Triangle Institute
Research Triangle Park, NC 27709-2194

EPA Cooperative Agreement CR 826152-01-1

EPA Project Officer: Theodore G. Brna
Air Pollution Prevention and Control Division
National Risk Management Research Laboratory
Research Triangle Park, NC 27711

Notice

This document was prepared by the Research Triangle Institute (RTI) under Cooperative Agreement No. CR826152-01-1 with the U.S. Environmental Protection Agency (EPA). The document has been subjected to EPA's peer and administrative reviews and has been approved for publication. Mention of corporation names, trade names, or commercial products does not constitute endorsement or recommendation for use of specific products.

UNITED STATES ENVIRONMENTAL PROTECTION AGENCY

Office of Research and Development

Washington, D.C. 20460

ENVIRONMENTAL TECHNOLOGY VERIFICATION PROGRAM

VERIFICATION STATEMENT

TECHNOLOGY TYPE:	**PAINT OVERSPRAY ARRESTOR**		
APPLICATION:	**CONTROL OF PARTICLE EMISSIONS FROM AEROSPACE PAINT SPRAYING FACILITIES**		
TECHNOLOGY NAME:	**Purolator D95084415, DMK80-4404, and PB2424**		
COMPANY:	**Purolator Products Air Filtration Co.**		
ADDRESS:	**880 Facet Rd.** **Henderson, NC 27536**	**PHONE:** **FAX:**	**(252) 492-1141, x4201** **(252) 492-6157**
WEB SITE:	**www.purolator.com**		
EMAIL:	**justtom@inet4u.com**		

PROGRAM DESCRIPTION

The U.S. Environmental Protection Agency (EPA) has created the Environmental Technology Verification (ETV) Program to facilitate the deployment of innovative or improved environmental technologies through performance verification and dissemination of information. The goal of the ETV Program is to further environmental protection by substantially accelerating the acceptance and use of improved and cost-effective technologies. ETV seeks to achieve this goal by providing high quality, peer reviewed data on technology performance to those involved in the design, distribution, financing, permitting, purchase, and use of environmental technologies.

ETV works in partnership with recognized standards and testing organizations, stakeholder groups which consist of buyers, vendor organizations and permitters, and with the full participation of individual technology developers. The program evaluates the performance of innovative technologies by developing test plans that are responsive to the needs of stakeholders, conducting field or laboratory tests (as appropriate), collecting and analyzing data, and preparing peer reviewed reports. All evaluations are conducted in accordance with rigorous quality assurance protocols to ensure that data of known and adequate quality are generated and that the results are defensible.

The Air Pollution Control Technology (APCT) program, one of 12 technology areas under ETV, is operated by the Research Triangle Institute (RTI), in cooperation with EPA's National Risk Management Research Laboratory. APCT has recently evaluated the performance of paint overspray arrestors used primarily in the aerospace industry. This verification statement provides a summary of the test results for the Purloator Products Air Filtration Company D95084415, DMK80-4404, and PB2424.

VERIFICATION TEST DESCRIPTION

All tests were performed in accordance with the APCT "Generic Verification Protocol for Paint Overspray Arrestors." The protocol incorporates all requirements of EPA Method 319: Determination of Filtration Efficiency for Paint Overspray Arrestors. [Method 319 is part of the National Emission Standards for Hazardous Air Pollutants (NESHAP) for Aerospace Manufacturing and Rework Facilities and was published in the *Federal Register* on March 27, 1998 (40 CFR Part 63).] The protocol also includes requirements for quality management, quality assurance, procedures for product selection, auditing of the test laboratories, and test reporting format.

Filtration efficiency is computed from aerosol concentrations measured upstream and downstream of an arrestor installed in a laboratory test rig. The aerosol concentrations upstream and downstream of the arrestor are measured with an aerosol analyzer that simultaneously counts and sizes the particles in the aerosol stream. The aerosol analyzer covers the particle diameter size range from 0.3 to 10 µm in a series of contiguous sizing channels. Each sizing channel covers a narrow range of particle diameters. By taking the ratio of the downstream to upstream counts on a channel by channel basis, the filtration efficiency is computed for each of the sizing channels.

The following series of tests were performed at a face velocity of 120 fpm (0.61 m/s):

- Three arrestors were tested using a liquid-phase aerosol challenge,
- Three arrestors were tested using a solid-phase aerosol challenge,
- Six "no-filter" control tests (one performed prior to each arrestor test),
- One high efficiency particulate air (HEPA) filter control test, and
- One reference filter control test.

TECHNOLOGY DESCRIPTION

The Purolator D95084415, DMK80-4404, and PB2424 arrestor system consists of three filters. The D95084415 is an eight-pocket bag filter with nominal dimensions of 24 x 24 x 15 in. (0.61 x 0.61 x 0.38 m). It has a metal frame, and the filter media is blue upstream and white downstream. Its label is white, ½ x 7 in. (1.27 x 17.8 cm) in size, and is affixed to the metal frame. The label includes the following information: Purolator Products Air Filtration Company, Model - D95084415K, Size - 24 x 24 x 15 in. (0.61 x 0.61 x 0.38 m), and an arrow indicating flow direction.

The DMK80-4404, Mark 80D, is a pleated panel filter with nominal dimensions of 24 x 24 x 4 in. (0.61 x 0.61 x 0.10 m). The filter media is blue with 22 pleats. Text imprinted on the cardboard frame includes the following information: Purolator Pleated Filter, Mark 80D, Medium Efficiency Panel Air Filter, Purolator Products Air Filtration Company, airflow direction, 24 x 24 x 4 in. (0.61 x 0.61 x 0.10 m) nominal size, 23 3/8 x 23 3/8 x 3 3/4 in. (0.59 x 0.59 x 0.095 m), exact size.

The PB2424, Prebond Pad, is a flat panel filter, with nominal dimensions of 25 x 25 x 2 in. (0.64 x 0.64 x 0.05 m). The media is white and tackified. The white, lightweight cardboard label, with a string attached, was 3 ½ x 6 ½ in. (8.9 x 16.5 cm) and stated Pre-bond Pad Part # PB2424. There is no label indication of the flow direction or filter orientation, so the industry standard orientation with the more porous side upstream was used.

VERIFICATION OF PERFORMANCE

Verification testing of the arrestor was performed from March 29 through 31, 1999, at the test facilities of RTI. For ready comparison, the filtration efficiency requirements of the NESHAP are tabulated with the test results in Tables 1 through 4. The test results indicate that the tested arrestor exceeded the requirements listed in Tables 1 and 2 for existing sources and those listed in Tables 3 and 4 for new sources. The pressure drop across the tested arrestors at 120 fpm (0.61 m/s) ranged from 0.22 to 0.26 in. H_2O (55 to 65 Pa) for the six arrestors tested.

The APCT quality assurance officer has reviewed the test results and the quality control data and has concluded that the data quality objectives given in the generic verification protocol have been attained.

This verification statement addresses two aspects of paint overspray arrestor performance: filtration efficiency and pressure drop. Users of this technology may wish to consider other performance parameters such as service life and cost when selecting a paint overspray arrestor for their use.

In accordance with the generic verification protocol, this verification report is valid for 12 months after the publication date 8/11/99.

Paint Overspray Arrestor Brand/Model: Purolator D95084415, DMK80-4404, and PB2424

TABLE 1. EXISTING SOURCES*:

LIQUID-PHASE CHALLENGE AEROSOL PARTICLES

Aerodynamic particle diameter range, µm	Filtration efficiency requirement, %	Filtration efficiency achieved, %
> 5.7	> 90	>99
> 4.1	> 50	>99
> 2.2	> 10	>99

TABLE 2. EXISTING SOURCES*:

SOLID-PHASE CHALLENGE AEROSOL PARTICLES

Aerodynamic particle diameter range, µm	Filtration efficiency requirement, %	Filtration efficiency achieved, %
> 8.1	> 90	>99
> 5.0	> 50	>99
> 2.6	> 10	>99

TABLE 3. NEW SOURCES*:

LIQUID-PHASE CHALLENGE AEROSOL PARTICLES

Aerodynamic particle diameter range, µm	Filtration efficiency requirement, %	Filtration efficiency achieved, %
> 2.0	> 95	>99
> 1.0	> 80	97
> 0.42	> 65	90

TABLE 4. NEW SOURCES*:

SOLID-PHASE CHALLENGE AEROSOL PARTICLES

Aerodynamic particle diameter range, µm	Filtration efficiency requirement, %	Filtration efficiency achieved, %
> 2.5	> 95	>99
> 1.1	> 85	99
> 0.70	> 75	98

*A new source is any affected source that commenced construction after October 29, 1996.
An existing source is any affected source that is not new.

Original Signed By
E. Timothy Oppelt
7/27/99

E. Timothy Oppelt Date
Director
National Risk Management Research Laboratory
Office of Research and Development
United States Environmental Protection Agency

Original Signed By
Jack R. Farmer
7/29/99

Jack R. Farmer Date
Program Manager,
Air Pollution Control Technology Program
Research Triangle Institute

NOTICE: EPA verifications are based on an evaluation of technology performance under specific, predetermined criteria and the appropriate quality assurance procedures. EPA and RTI make no expressed or implied warranties as to the performance of the technology and do not certify that a technology will always operate as verified. The end user is solely responsible for complying with any and all applicable federal, state, and local requirements. Mention of commercial product names does not imply endorsement.

Availability of Verification Statement and Report

Copies of the public Verification Statement and Verification Report are available from the following:

1. **Research Triangle Institute**
   P.O. Box 12194
   Research Triangle Park, NC 27709-2194

   Web site: http://etv.rti.org/apct/index.html
   or http://www.epa.gov/etv *(click on partners)*

2. **USEPA / APPCD**
   MD-4
   Research Triangle Park, NC 27711

   Web site: http://www.epa.gov/etv/library.htm *(electronic copy)*
   http://www.epa.gov/ncepihom/

Abstract

Paint overspray arrestors (POAs) were evaluated by the Air Pollution Control Technology (APCT) pilot of the Environmental Technology Verification (ETV) Program. The performance factor verified was the particle filtration efficiency as a function of size for particles smaller than 10 µm. The APCT ETV Program developed a generic verification protocol for testing filtration efficiency that is based on EPA Method 319. The protocol was developed by RTI, reviewed by a technical panel of experts, and approved by EPA. The protocol addresses several issues that Method 319 does not cover, including periodic testing, acquisition of POAs for testing, and product definition. A Test/Quality Assurance Plan was prepared which addresses the test procedure and quality assurance and quality control requirements for obtaining verification data of sufficient quantity and quality to satisfy the data quality objectives.

RTI performed tests on Purolator Products Air Filtration Co.'s D95084415, DMK80-4404, and PB2424 during the period March 29-31, 1999. Filter efficiencies were determined. For ready comparison, the filtration efficiency requirements of the National Emission Standards for Hazardous Air Pollutants (NESHAP) are tabulated with the test results. The results indicate that the D95084415, DMK80-4404, and PB2424 exceeded the NESHAP requirements for new and existing sources.

Table of Contents

Page

Notice ii

Verification Statement iii

Availability of Verification Statement and Report viii

Abstract ix

List of Figures xi

List of Tables xi

List of Abbreviations and Acronyms xii

Acknowledgments xiii

Section 1. Introduction 1

Section 2. Verification Test Description 1
2.1. Selection of Tested Paint Overspray Arrestors 3

Section 3. Description of Arrestor 3

Section 4. Verification of Performance 3
4.1. Quality Assurance 3
4.2. Results 4
4.3. Limitations 4

Section 5. References 4

Appendix A. Description of the Test Rig and Methodology A-1

Appendix B. Certificates of Calibration B-1

Appendix C. Fractional Efficiency Data Sheets C-1

List of Figures

Page

Figure 1. Triplicate solid-phase particle removal efficiency curves for Purolator D95084415, DMK80-4404, and PB2424 paint overspray arrestor. 7

Figure 2. Average of the solid-phase particle removal efficiency curves for Purolator D95084415, DMK80-4404, and PB2424 paint overspray arrestor. 8

Figure 3. Triplicate liquid-phase particle removal efficiency curves for Purolator D95084415, DMK80-4404, and PB2424 paint overspray arrestor 9

Figure 4. Average of the liquid-phase particle removal efficiency curves for Purolator D95084415, DMK80-4404, and PB2424 paint overspray arrestor 10

List of Tables

Table 1. Test Series 2

Table 2. Summary of Solid-Phase Test Results 5

Table 3. Summary of Liquid-Phase Test Results 6

Table 4. Summary of Pressure Drop Measurements 11

Table 5. Existing Sources: Liquid-Phase Challenge Aerosol Particles 12

Table 6. Existing Sources: Solid-Phase Challenge Aerosol Particles 12

Table 7. New Sources: Liquid-Phase Challenge Aerosol Particles 12

Table 8. New Sources: Solid-Phase Challenge Aerosol Particles 12

List of Abbreviations and Acronyms

APCT	Air Pollution Control Technology
APPCD	Air Pollution Prevention and Control Division
cfm	cubic feet per minute
cm	centimeter
DQO	data quality objective
EPA	U.S. Environmental Protection Agency
ETV	Environmental Technology Verification
ETVR	Environmental Technology Verification Report
fpm	feet per minute
HEPA	high efficiency particulate air
in.	inch
mm	millimeter
m/s	meters per second
NESHAP	National Emission Standards for Hazardous Air Pollutants
Pa	pascal
POA	paint overspray arrestor
QA	quality assurance
RTI	Research Triangle Institute
µm	micrometer

Acknowledgments

RTI acknowledges the support of all those who helped plan and conduct the verification activities. In particular, we would like to thank Ted Brna, EPA Project Manager, and Paul Groff, EPA Project Quality Manager, of EPA' s National Risk Management Research Laboratory in Research Triangle Park, NC. Finally we would like to acknowledge the assistance and participation of Tom Justice of Purolator Products Air Filtration Co.

For more information on the Paint Overspray Arrestor Verification Testing, contact

James Hanley
Research Triangle Institute
P.O. Box 12194
Research Triangle Park, NC 27709-2194
919-541-5811

For more information on the Purolator D95084415, DMK80-4404, and PB2424, contact

Tom Justice
Purolator Products Air Filtration Co.
880 Facet Rd..
Henderson, NC 27536
252-492-1141 ext 4201

SECTION 1
INTRODUCTION

The U. S. Environmental Protection Agency (EPA) has created the Environmental Technology Verification (ETV) Program to facilitate the deployment of innovative or improved technologies through performance verification and information dissemination. The ETV Program is intended to assist and inform those involved in the design, distribution, permitting, and purchase of environmental technologies.

The U.S. EPA's partner in the Air Pollution Control Technology (APCT) Program is Research Triangle Institute (RTI). The APCT Program, with the full participation of the technology developer, develops plans, conducts tests, collects and analyzes data, and reports findings. The evaluations are conducted according to a rigorous protocol and quality assurance and quality control oversight. The APCT Program verifies the performance of commercial-ready technologies used to control air pollutant emissions, with an emphasis on technologies for controlling particulate matter, volatile organic compounds, nitrogen oxides, and hazardous air pollutants. The Program develops standardized verification protocols and test plans, conducts independent testing of technologies, and prepares verification test reports and statements for broad dissemination.

SECTION 2
VERIFICATION TEST DESCRIPTION

The paint overspray arrestor was tested in accordance with the APCT "Generic Verification Protocol for Paint Overspray Arrestors"[1] and the "Test/QA Plan for Paint Overspray Arrestors."[2] This protocol incorporates all requirements of EPA Method 319: Determination of Filtration Efficiency for Paint Overspray Arrestors. Method 319[3] is part of the National Emission Standards for Hazardous Air Pollutants (NESHAP) for Aerospace Manufacturing and Rework Facilities.[4] The protocol also includes requirements for quality management, quality assurance, procedures for product selection, auditing of the test laboratories, and reporting format.

Filtration efficiency was computed from aerosol concentrations measured upstream and downstream of an arrestor installed in a laboratory test rig. The aerosol concentrations upstream and downstream of the arrestors were measured with an aerosol analyzer that simultaneously counts and sizes the particles in the aerosol stream. The aerosol analyzer covered the particle diameter size range from 0.3 to 10 µm in a series of contiguous sizing channels. Each sizing channel covered a narrow range of particle diameters. For example, channel 1 may cover from 0.3 to 0.4 µm, channel 2 from 0.4 to 0.5 µm, and channel 15 from 7 to 10 µm. By taking the ratio of the downstream to upstream counts on a channel by channel basis, the filtration efficiency was computed for each of the sizing channels.

The upstream and downstream aerosol measurements were made while a test aerosol was injected into the air stream upstream of the arrestor [ambient aerosol is removed with high efficiency particulate air (HEPA) filters on the inlet of the test rig]. This test aerosol spanned the particle size range from 0.3 to 10 µm and provided a sufficient upstream concentration in each of the sizing channels to allow accurate calculation of filtration efficiencies up to 99%.

The following series of tests were performed at a face velocity of 120 fpm (0.61 m/s):

- Three arrestors were tested using a liquid-phase aerosol challenge,
- Three arrestors were tested using a solid-phase aerosol challenge,

- C “No-filter” control tests (one performed prior to each arrestor test) ,
- C One HEPA filter control test, and
- C One reference filter control test.

The test series is exhibited in Table 1. Additional details on the test procedure are provided in Appendix A.

TABLE 1. TEST SERIES

RTI Test No.	TYPE OF TEST				Challenge Aerosol
	No-Filter	Test Arrestor	HEPA Filter	Reference Filter	
03299904	X				Solid-Phase
03299905				X	
03299906	X				
03299907		X			
03299908	X				
03299909		X			
03309901	X				
03319903		X			
03199907			X		
03309903	X				Liquid-Phase
03309904		X			
03309905	X				
03309906		X			
03319901	X				
03319902		X			

2.1 SELECTION OF TESTED PAINT OVERSPRAY ARRESTORS

The test arrestors (D95084415, DMK80-4404, and PB2424) were supplied to the test laboratory directly from the manufacturer (Purolator Products Air Filtration Co.) with a letter signed by Tom Justice, Vice President of Operations, attesting that the arrestors were selected in an unbiased manner and have not been treated in any manner different from the arrestors they offer to the public. The PB2424s were in stock and an order was placed to ship these filters from the manufacturing plant to the corporate office and then to RTI. The other two items were ordered by a third party, manufactured, then diverted to RTI. The manufacturer supplied the test laboratory with 18 arrestors; from these 18, the test laboratory randomly selected six for testing.

SECTION 3
DESCRIPTION OF ARRESTOR

The Purolator D95084415, DMK80-4404, and PB2424 arrestor system consists of three filters. The D95084415 is an eight-pocket bag filter with nominal dimensions of 24 x 24 x 15 in. (0.61 x 0.61 x 0.38 m). It has a metal frame, and the filter media is blue upstream and white downstream. Its label is white, ½ x 7 in. (1.27 x 17.8 cm) in size, and is affixed to the metal frame. The label includes the following information: Purolator Products Air Filtration Company, Model - D95084415K, Size - 24 x 24 x 15 in. (0.61 x 0.61 x 0.38 m), and an arrow indicating flow direction.

The DMK80-4404, Mark 80D, is a pleated panel filter with nominal dimensions of 24 x 24 x 4 in. (0.61 x 0.61 x 0.10 m). The filter media is blue with 22 pleats. Text imprinted on the cardboard frame includes the following information: Purolator Pleated Filter, Mark 80D, Medium Efficiency Panel Air Filter, Purolator Products Air Filtration Company, airflow direction, 24 x 24 x 4 in. (0.61 x 0.61 x 0.10 m) nominal size, 23 3/8 x 23 3/8 x 3 3/4 in. (0.59 x 0.59 x 0.095 m), exact size.

The PB2424, Prebond Pad, is a flat panel filter, with nominal dimensions of 25 x 25 x 2 in. (0.64 x 0.64 x 0.05 m). The media is white and tacky. The white, lightweight cardboard label, with a string attached, was 3 ½ x 6 ½ in. (8.9 x 16.5 cm) and stated Pre-bond Pad Part # PB2424. There is no label indication of the flow direction or filter orientation, so the industry standard orientation with the more porous side upstream was used.

SECTION 4
VERIFICATION OF PERFORMANCE

4.1 QUALITY ASSURANCE

The verification tests were conducted in accordance with an approved Test/Quality Assurance (QA) Plan.[2] As part of the Test/QA Plan, periodic audits are performed of the testing laboratory to ensure compliance with Method 319 facilities, equipment, and procedures. Additionally, the test results were reviewed by APCT personnel to ensure they

met data quality objectives of Method 319, the Test Protocol, and the Test/QA Plan. Certificates of Calibration for the optical particle counter and the airflow reference device are provided in Appendix B.

4.2 RESULTS

Tables 2 and 3, and Figures 1 through 4, summarize the fractional filtration efficiency measurements for the solid- and liquid-phase tests, respectively. Upstream and downstream particle count data for each test are provided in Appendix C.

The initial (new condition) pressure drop across each test arrestor at the 120 fpm (0.61 m/s) test velocity [for a flowrate of 480 cfm (0.23 m^3/s)] is shown in Table 4. This pressure drop ranged from 0.22 to 0.26 in. H_2O (55 to 65 Pa) for the six arrestors tested.

Tables 5-8 present the filtration efficiency requirements of the Aerospace NESHAP and the corresponding efficiencies measured for the tested arrestor system. The test results indicate that the tested arrestor exceeded the requirements listed in Tables 5 and 6 for existing sources and those listed in Tables 7 and 8 for new sources.

4.3 LIMITATIONS

This verification report addresses two aspects of paint overspray arrestor performance: filtration efficiency and pressure drop. Users of this technology may wish to consider other performance parameters such as service life and cost when selecting a paint overspray arrestor for their use.

In accordance with the generic verification protocol, this verification report and the associated verification statement are valid for 12 months after the publication date.

SECTION 5
REFERENCES

1. Generic Test Protocol for Verification Testing of Paint Overspray Arrestors, Research Triangle Institute, Research Triangle Park, NC, October 1998.

2. Test/QA Plan for Paint Overspray Arrestors, Research Triangle Institute, Research Triangle Park, NC, February 1999.

3. Method 319: Determination of Filtration Efficiency for Paint Overspray Arrestors. *Code of Federal Regulations*, Appendix A to 40 CFR Part 63.

4. National Emission Standards for Hazardous Air Pollutants for Aerospace Manufacturing and Rework Facilities. *Code of Federal Regulations*, Title 40, Part 63, Subpart GG (40 CFR 63.741).

TABLE 2. SUMMARY OF SOLID-PHASE TEST RESULTS

Filtration Efficiency (%) at Indicated Size Range

OPC Channel Number		1	2	3	4	5	6	7	8	9	10	11	12	13	14	15
Min. Diam. (um)		0.45	0.59	0.73	0.80	1.02	1.44	1.86	2.28	2.85	3.13	4.25	5.66	7.07	7.77	9.88
Max. Diam. (um)		0.59	0.73	0.80	1.02	1.44	1.86	2.28	2.85	3.13	4.25	5.66	7.07	7.77	9.88	14.10
Geo. Mean Diam (um)		0.52	0.66	0.77	0.90	1.21	1.64	2.06	2.55	2.98	3.65	4.91	6.33	7.41	8.76	11.81
Purolator 3-stage																
Run #1	03299907	97	98	99	99	100	100	100	100	100	100	100	100	100	100	100
Run #2	03299909	96	98	99	99	99	100	100	100	100	100	100	100	100	100	100
Run #3	03319903	96	98	99	99	99	100	100	100	100	100	100	100	100	100	100
Average		97	98	99	99	99	100	100	100	100	100	100	100	100	100	100

Interpolated Efficiency Values (%) for Two-Stage Criteria:

2.60 um (> 10% required):	100
5.00 um (> 50% required):	100
8.10 um (> 90% required):	100

Interpolated Efficiency Values (%) for Three-Stage Criteria:

0.70 um (> 75% required):	98
1.10 um (> 85% required):	99
2.50 um (> 95% required):	100

HEPA Filter Control Test (applicable to both solid and liquid phase conditions)

Run #1	03199907	100	100	100	100	100	100	100	100	100	100	100	100	100	100	100
Reference Filter QA Test																
Current	03299905	2	2	4	6	8	15	26	45	62	76	89	93	93	93	92
Baseline	03189903	1	3	4	5	8	15	26	44	61	75	90	94	94	95	95
Difference		1	-1	0	1	-1	-1	0	1	0	0	-1	-1	-1	-2	-2
Acceptable (< 10%)		yes	yes	yes	yes	yes	yes	yes	yes	yes	yes	yes	yes	yes	yes	yes
"No Filter" Control Tests		Penetration For Each Size Range														
Run #1	03299906	0.99	0.99	0.99	0.99	0.99	0.99	0.99	0.99	1.00	1.00	1.03	1.00	0.94	0.97	0.96
Run #2	03299908	1.00	1.00	0.99	0.99	1.00	1.01	0.99	1.00	1.01	1.02	1.02	1.00	0.98	1.02	1.01
Run #3	03309901	1.01	1.01	1.00	1.02	1.02	1.03	1.01	1.02	1.03	1.04	1.03	0.97	0.99	0.83	0.93

TABLE 3. SUMMARY OF LIQUID- PHASE TEST RESULTS

Filtration Efficiency (%) at Indicated Size Range

OPC Channel Number		1	2	3	4	5	6	7	8	9	10	11	12	13	14	15
Min. Diam. (um)		0.28	0.37	0.47	0.52	0.66	0.94	1.22	1.51	1.88	2.07	2.83	3.77	4.71	5.18	6.60
Max. Diam. (um)		0.37	0.47	0.52	0.66	0.94	1.22	1.51	1.88	2.07	2.83	3.77	4.71	5.18	6.60	9.43
Geo. Mean Diam (um)		0.32	0.418	0.49	0.58	0.78	1.07	1.36	1.68	1.97	2.42	3.26	4.21	4.94	5.85	7.89
Purolator 3-stage																
Run #1	03309904	87	89	91	92	94	97	98	100	100	100	100	100	100	100	100
Run #2	03309906	89	91	92	93	96	98	99	100	100	100	100	100	100	100	100
Run #3	03319902	89	91	92	93	96	98	99	100	100	100	100	100	100	100	100
Average		89	90	92	93	95	97	99	100	100	100	100	100	100	100	100

Interpolated Efficiency Values (%) for Two-Stage Criteria:

2.20 um (> 10% required):	100
4.10 um (> 50% required):	100
5.70 um (> 90% required):	100

Interpolated Efficiency Values (%) for Three-Stage Criteria:

0.42 um (> 65% required):	90
1.00 um (> 80% requried):	97
2.00 um (> 95% required):	100

"No Filter" Control Tests		Penetration For Each Size Range														
Run #1	03309903	0.99	0.99	0.99	1.00	1.00	0.99	1.00	0.99	1.00	1.00	1.01	0.97	0.94	0.86	0.72
Run #2	03309905	0.98	0.99	0.98	0.99	0.99	0.99	0.99	0.99	1.00	1.00	1.01	0.99	0.93	0.93	0.77
Run #3	03319901	1.00	1.00	1.00	1.00	1.00	1.01	1.01	1.02	1.00	1.01	1.01	1.01	0.99	1.05	1.06

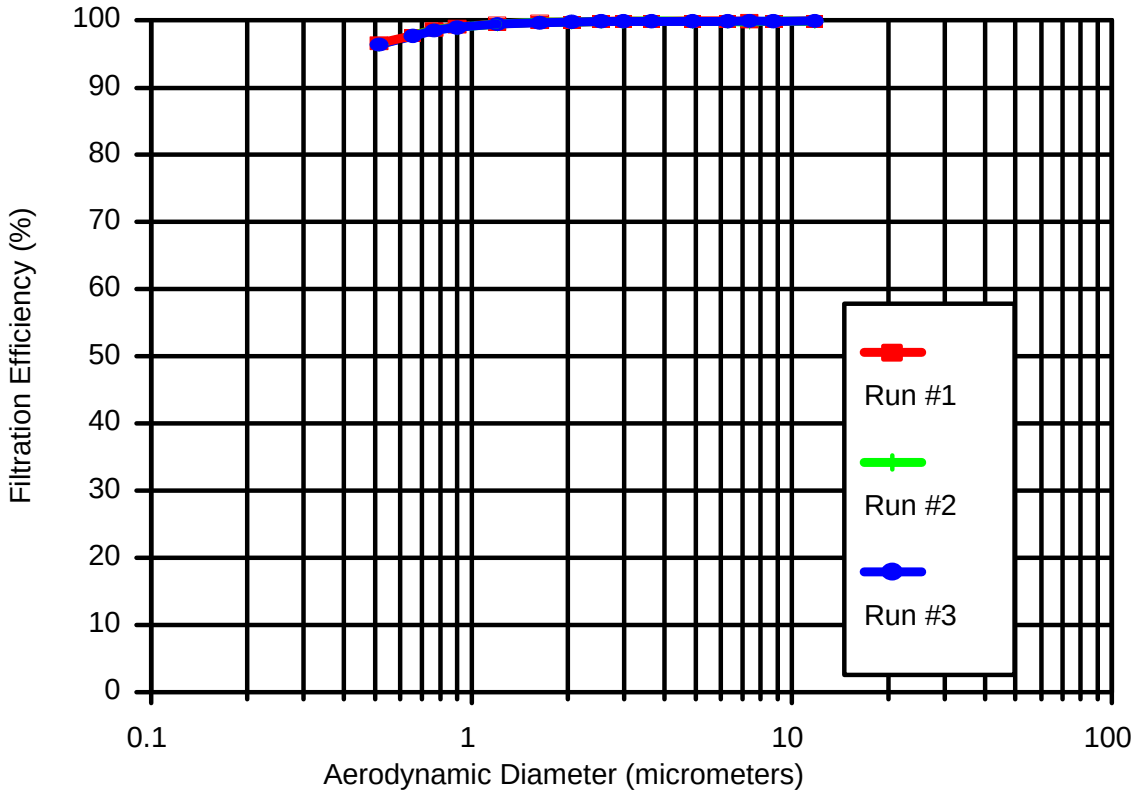

Figure 1. Triplicate solid-phase particle removal efficiency curves for Purolator D95084415, DMK80-4404, and PB2424 paint overspray arrestor.

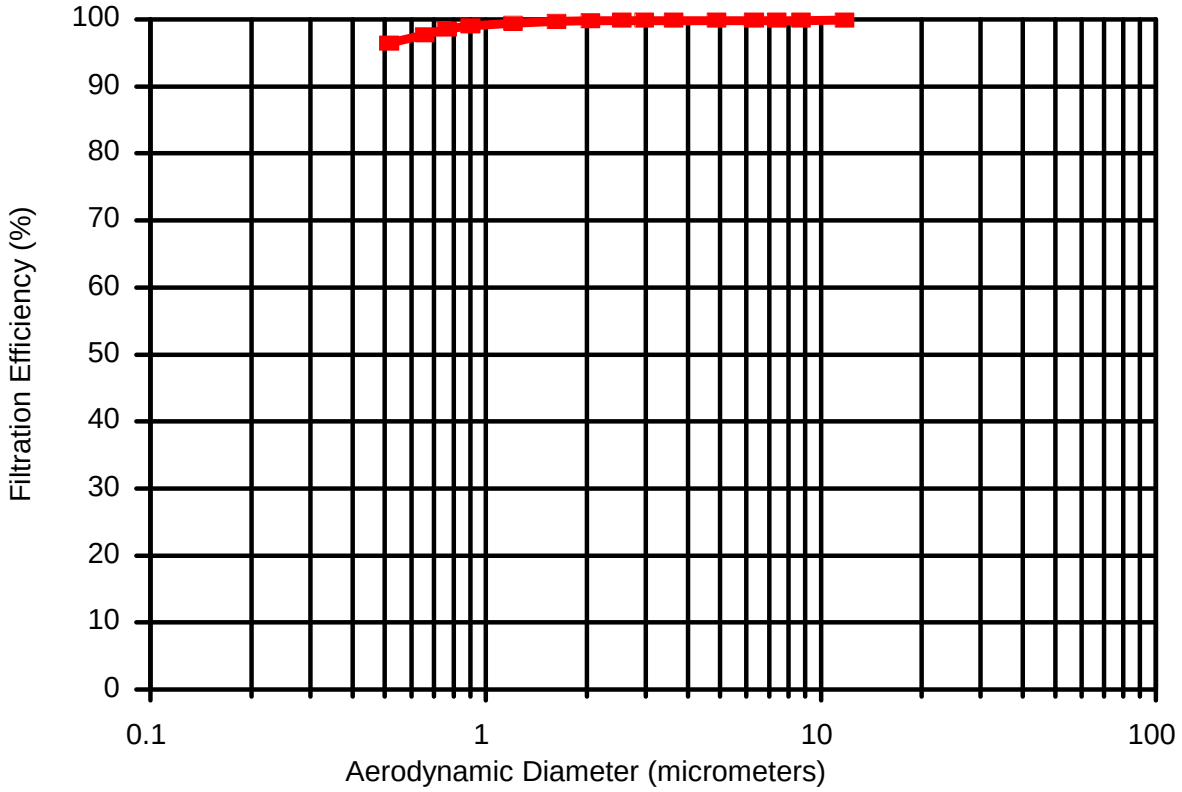

Figure 2. Average of the solid-phase particle removal efficiency curves for Purolator D95084415, DMK80-4404, and PB2424 paint overspray arrestor.

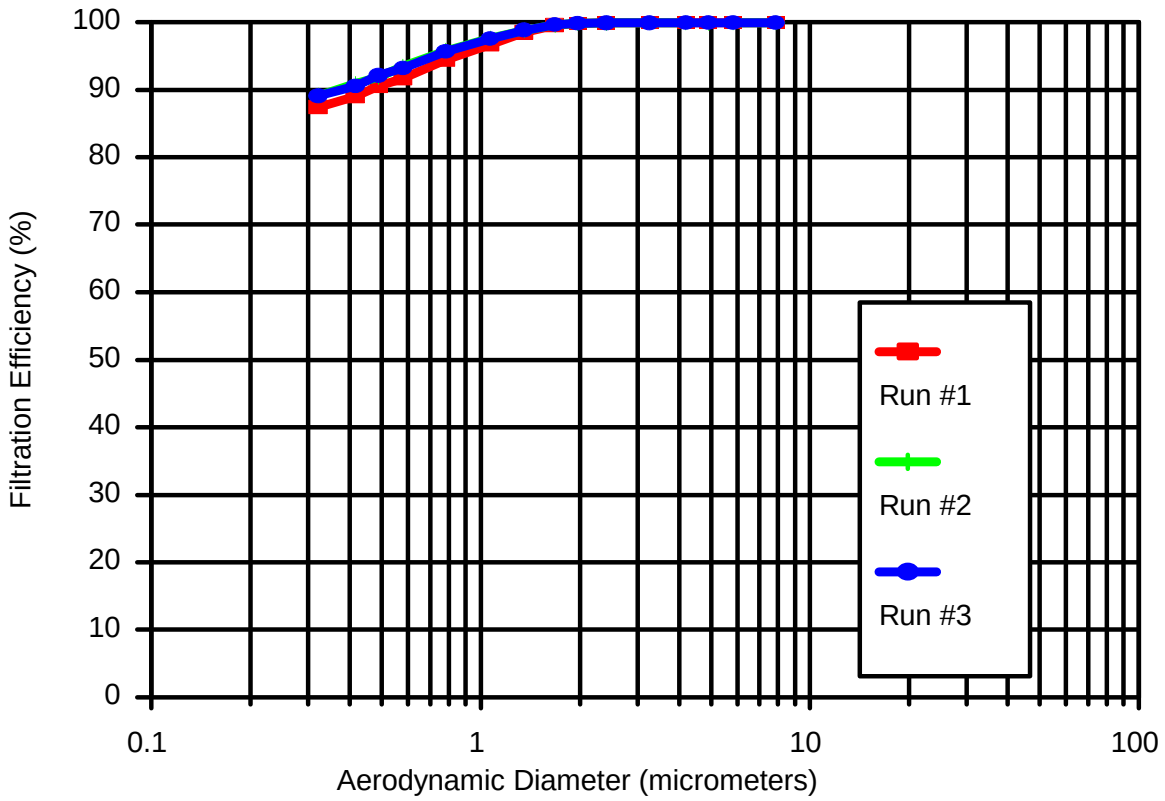

Figure 3. Triplicate liquid-phase particle removal efficiency curves for Purolator D95084415, DMK80-4404, and PB2424 paint overspray arrestor.

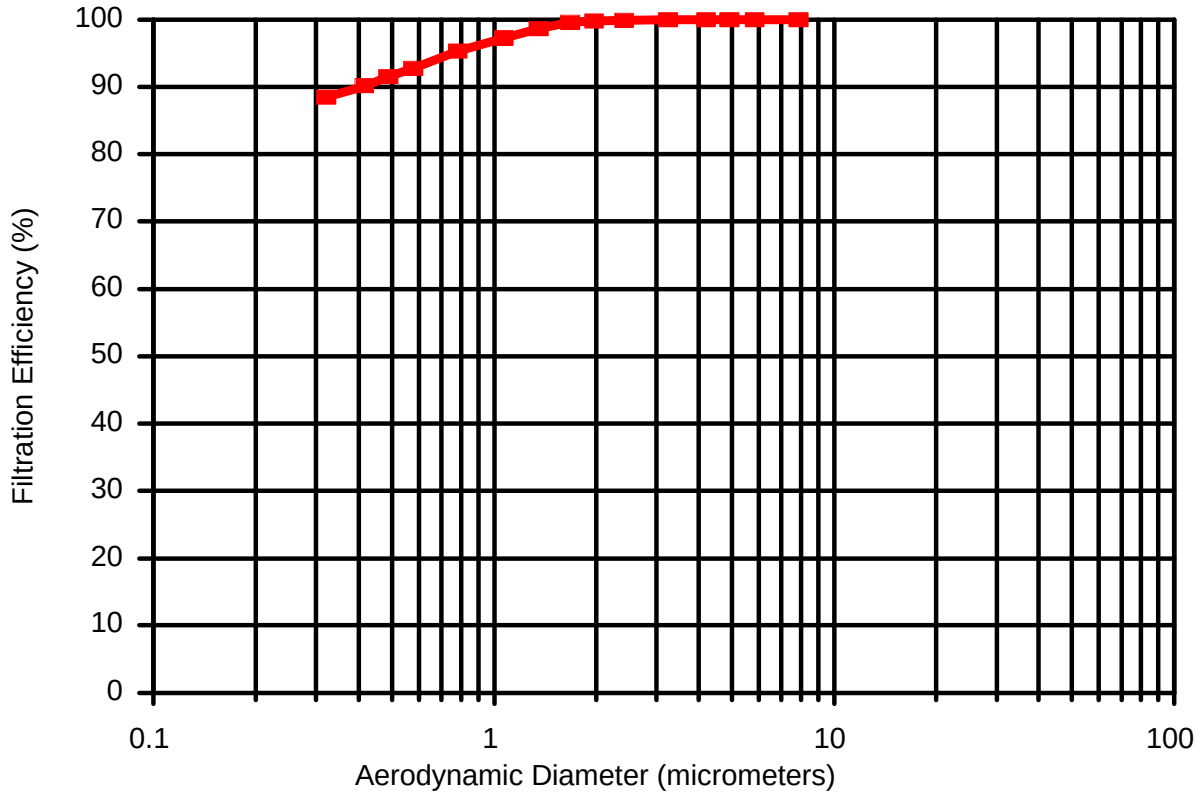

Figure 4. Average of the liquid-phase particle removal efficiency curves for Purolator D95084415, DMK80-4404, and PB2424 paint overspray arrestor.

TABLE 4

SUMMARY OF PRESSURE DROP MEASUREMENTS

Test No.	Initial Pressure Drop (inch H_2O)
03299907	0.23
03299909	0.24
03319903	0.23
03309904	0.26
03309906	0.23
03319902	0.22

TABLE 5. EXISTING SOURCES*:
LIQUID-PHASE CHALLENGE AEROSOL PARTICLES

Aerodynamic particle diameter range, µm	Filtration efficiency requirement, %	Filtration efficiency achieved, %
> 5.7	> 90	>99
> 4.1	> 50	>99
> 2.2	> 10	>99

TABLE 6. EXISTING SOURCES*:
SOLID-PHASE CHALLENGE AEROSOL PARTICLES

Aerodynamic particle diameter range, µm	Filtration efficiency requirement, %	Filtration efficiency achieved, %
> 8.1	> 90	>99
> 5.0	> 50	>99
> 2.6	> 10	>99

TABLE 7. NEW SOURCES*:
LIQUID-PHASE CHALLENGE AEROSOL PARTICLES

Aerodynamic particle diameter range, µm	Filtration efficiency requirement, %	Filtration efficiency achieved, %
> 2.0	> 95	>99
> 1.0	> 80	97
> 0.42	> 65	90

TABLE 8. NEW SOURCES*:
SOLID-PHASE CHALLENGE AEROSOL PARTICLES

Aerodynamic particle diameter range, µm	Filtration efficiency requirement, %	Filtration efficiency achieved, %
> 2.5	> 95	>99
> 1.1	> 85	99
> 0.70	> 75	98

*A new source is any affected source that commenced construction after October 29, 1996. An existing source is any affected source that is not new.

Appendix A

DESCRIPTION OF THE TEST RIG AND METHODOLOGY

TEST DUCT

The tests were conducted in RTI's air cleaner test facility (Figure A-1). The test rig's ducting was primarily of 24 x 24 in. (0.61 x 0.61m) cross section and made of 14-gauge stainless steel. The blower is rated at 15 hp (11 kW) with a flow capacity of 3000 cfm (1.4 m^3/s) at 13 in. H_2O (3200 Pa). The inlet and outlet filter banks consist of two 24 x 24 x 2 in. (0.61 x 0.61 x 0.05 m) prefilters and two 24 x 24 x 12 in. (0.61 x 0.61 x 0.30 m) high efficiency particulate air (HEPA) filters rated at 2000 cfm (0.9 m^3/s) each. The system operates at positive pressure to minimize infiltration of room air.

To mix the test aerosol with the air stream, an orifice plate and mixing baffle were located immediately downstream of the aerosol injection point and upstream of the test arrestor. An identical orifice plate and mixing baffle were added after the 180° bend. The latter downstream orifice served two purposes. It straightened out the flow after going around the bend, and it mixed any aerosol that penetrated the air cleaning device. Mixing the penetrating aerosol with the air stream is necessary to obtain a representative downstream aerosol measurement.

AIRFLOW

Airflow was measured with a 4 in. (0.1 m) ID American Society of Mechanical Engineers (ASME) flow nozzle. The nominal velocity through the arrestor was computed by dividing the volumetric flow by the nominal face area of the device. Airflow was manually controlled by a 14 in. (0.36 m) diameter butterfly valve.

OPTICAL PARTICLE COUNTER (OPC)

Aerosol concentrations were measured with a Climet Instruments Model 226 OPC. This OPC uses a white-light illumination source and has a wide collection angle for the scattered light. The OPC's sampling rate was 0.25 cfm (0.00012 m^3/s).

The output of the OPC was input to a Climet Instruments Model 8040 multichannel analyzer equipped with Model 05872005 and 05872006 input boards. These boards provide 16 sizing channels covering the range from 0.3 to 10 µm. The 8040 was also equipped with a Model CI-298 sequential interface board. This interface provides a contact closure at the end of each sample and also provides a 15-sec delay in particle counting after each sample. The contact closure was used to control the operation of electromechanical valve actuators in the upstream and downstream sample lines. The 15-sec delay allows time for the new sample to be acquired.

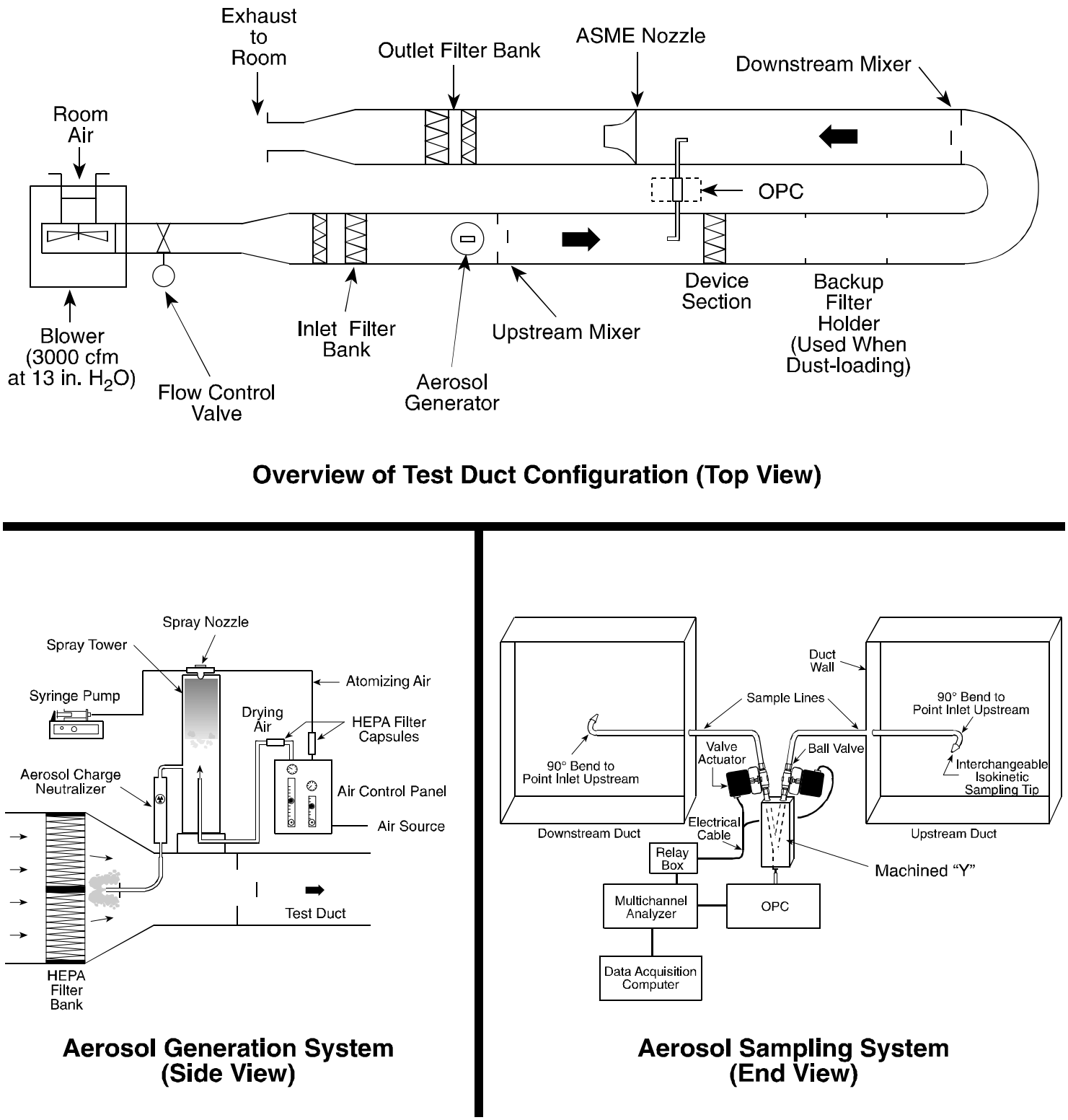

Figure A-1. Schematic illustration of the fractional efficiency test rig.

AEROSOL GENERATION

Two types of challenge aerosols were used: liquid- and solid-phase. The selection of liquid- or solid-phase challenge aerosol particles is important because for some types of paint arrestors significantly different filtration efficiencies will be achieved depending upon the phase of the challenge aerosol particles. (This is due to particle "bounce" associated with solid-phase particles.) The liquid-phase challenge aerosol is oleic acid, a non-toxic, low-volatility liquid. The solid-phase aerosol is potassium chloride (KCl) generated from an aqueous solution. KCl was selected as the solid-phase aerosol because of its relatively high water solubility, high deliquescence humidity (85% relative humidity), known crystalline structure (facilitates complete drying), and low toxicity. The KCl solution was prepared by combining 0.66 lb (300 g) of KCl with 0.035 ft^3 (1 L) of distilled water. Both oleic acid and KCl are compatible with accurate measurement by the optical particle counter.

The oleic acid or the KCl solution was nebulized using a two-fluid (air and liquid) air atomizing nozzle (Spray Systems 1/4 J siphon spray nozzle) as illustrated in Figure A-1 (aerosol generation system). The nozzle was positioned at the top of a 12 in. (0.30 m) diameter, 51 in. (1.3 m) tall transparent acrylic spray tower. The tower served two purposes. It allowed the salt droplets to dry by providing an approximate 40 sec. mean residence time, and it allowed larger-sized particles (of either KCl or oleic acid) to fall out of the aerosol. After generation, the aerosol passed through a TSI Model 3054 aerosol neutralizer (Kr-85 radioactive source) to neutralize any electrostatic charge on the aerosol (electrostatic charging is an unavoidable consequence of most aerosol-generation methods).

The KCl solution or oleic acid was fed to the atomizing nozzle at 1.2 mL/min (4.2×10^{-5} ft^3/min) by means of a pump. Varying the operating air pressure of the generator allows control of the mean diameter of the challenge aerosol.

AEROSOL SAMPLING SYSTEM

The aerosol sampling lines were 0.55 in. (14 mm) ID stainless steel lines and used gradual bends [radius of curvature = 2.25 in. (57 mm)] when needed. These dimensions were chosen to minimize particle losses in the sample lines. A custom-made "Y" fitting connected the upstream and downstream lines to the OPC. The two branches of the "Y" merged gradually to minimize particle loss in the intersection of the "Y" due to centrifugal or impaction forces.

Immediately above the "Y," electrically actuated ball valves were installed in each branch (Parker Model EA Electro-Mechanical Valve Actuator). The opening and closing of the valves were automatically controlled by the OPC's sequential sampling interface board. The valves take approximately 2 sec. to complete an opening or closing maneuver.

Isokinetic sampling nozzles of the appropriate entrance diameter were placed on the ends of the sample probes to maintain isokinetic sampling for all the test flow rates.

TEST PROCEDURES

The aerosol penetration of the test device was calculated from the average of 10 upstream and 10 downstream samples taken sequentially (i.e., one upstream, one downstream, one upstream, one downstream, . . . until 10 each were obtained). This sequential sampling scheme was selected to minimize the effect of aerosol generator variability. Each sample was 2 minutes in duration. The sampling also included background upstream and downstream measurements at the beginning and end of each test. The test sequence was as follows:

1. Warm up OPC and install proper sample tips for isokinetic sampling.
2. Install air cleaner test device and bring test duct to desired flow rate.
3. With the aerosol generator off, obtain five measurements of the upstream and downstream background particle counts.
4. Turn on the aerosol generator and allow it to run for a minimum of 10 minutes to stabilize.
5. After the stabilization period, obtain 10 upstream and 10 downstream particle counts using a repeated upstream-downstream sampling sequence until 10 each are obtained.
6. Turn off the aerosol generator. Wait 10 minutes, then obtain five additional upstream and downstream background measurements.

CONTROL TESTS:

In addition to evaluating the test arrestor, 0 and 100% penetration control tests and a reference filter control test were conducted to ensure that reliable measurements are obtained. The 100% penetration test was a relatively stringent test of the adequacy of the overall duct, sampling, measurement and aerosol generation system. These tests were performed as normal penetration tests except that the paint arrestor was not used. A perfect system would yield a measured penetration of 1 at all particle sizes. Deviations from 1 can occur due to particle losses in the duct, differences in the degree of aerosol uniformity (i.e., mixing) at the upstream and downstream probes, and differences in particle-transport efficiency in the upstream and downstream sampling lines. Results from the 100% penetration tests were used during data analysis to correct penetration measurements obtained during the arrestor tests.

The 0% penetration test was performed by using a HEPA filter rather than a paint arrestor. This test confirmed the adequacy of the instrument response time and sample line lag. The 0% penetration test was performed on a monthly basis.

The reference filter control test consisted of performing a solid-phase efficiency test on the same filter during each ETV test. The reference filter data from each test were compared to the original, baseline reference filter data to determine if there was any substantial change in the test system between the tests.

DATA ANALYSIS

Nomenclature

U = Upstream particle count
D = Downstream particle count
U_b = Upstream background count
D_b = Downstream background count
P_o = observed penetration = $\bar{D}/\bar{U}$

P_{100} = 100% penetration value determined from the control tests
P = Penetration corrected for P_{100} value
Overbar: denotes arithmetic mean of quantity

Analysis of each test involves the following quantities:

- P_{100} value for each sizing channel from the blank (no-filter) test,
- 2 upstream background values,
- 2 downstream background values,
- 10 upstream values with aerosol generator on, and
- 10 downstream values with aerosol generator on.

Using the values associated with each sizing channel, the penetration associated with each particle sizing channel was calculated as:

$$P = \{(\bar{D} - \bar{D}_b) / (\bar{U} - \bar{U}_b)\} / P_{100} \ .$$

Filtration efficiency was then calculated as:

$$\text{Filtration Efficiency (\%)} = 100\ (1 - P).$$

DEFINITION OF PARTICLE DIAMETER

Over the 0.3 to 10 µm diameter size range, the "aerodynamic" particle diameter is often of more significance than the physical diameter (as measured by the OPC) relative to aerosol filtration and aerosol deposition within the human respiratory tract. The aerodynamic diameter (D_{Aero}) is related to the physical diameter ($D_{Physical}$) by:

$$D_{Aero} \quad ' \quad D_{Physical} \sqrt{\frac{?_{Particle}}{?_o} \quad \frac{CCF_{Physical}}{CCF_{Aero}} \quad \frac{1}{?}}$$

where

$?_{Particle}$ is the density of the particle in g/cm^3.

$?_o$ is unit density of 1 g/cm^3.

$CCF_{Physical}$ is the Cunningham Correction Factor at $D_{Physical}$.

CCF_{Aero} is the Cunningham Correction Factor at D_{Aero}.

? is the dynamic shape factor.

For oleic acid droplets having a density of 0.89 g/cm^3 and being spherical (? = 1), the aerodynamic diameter will be about 6% smaller than the measured diameter.

KCl has a density of 1.98 g/cm^3. The KCl particles form from the evaporation of aqueous solution droplets. Because KCl has an inherent cubic crystalline structure, it is expected that the KCl particles will be cubic or relatively compact cubic clusters; however, their actual shape, or range of shapes, is unknown. Because the shape factor is

unknown, the shape factor for KCl is assigned a value of 1 and the diameter is termed the "nominal" aerodynamic diameter.

The aerodynamic diameters associated with the 15 OPC sizing channels are tabulated in Table A-1 for oleic acid and KCl. Also listed is the physical diameter size range for each channel based on the manufacturer's calibration curve using monodisperse polystyrene latex (PSL) spheres.

Table A-1. Physical and Aerodynamic Sizing Channels for the Calibration and Test Aerosols

	Particle Diameter Size Range (µm)*		
	PSL	OLEIC ACID	KCl
OPC Channel Number	Physical Diameter	Aerodynamic Diameter	Nominal Aerodynamic Diameter
1	0.3 - 0.4	0.28 - 0.37	0.45 - 0.59
2	0.4 - 0.5	0.37 - 0.47	0.59 - 0.73
3	0.5 - 0.55	0.47 - 0.52	0.73 - 0.80
4	0.55 - 0.7	0.52 - 0.66	0.80 - 1.02
5	0.7 - 1.0	0.66 - 0.94	1.02 - 1.44
6	1.0 - 1.3	0.94 - 1.22	1.44 - 1.86
7	1.3 - 1.6	1.22 - 1.51	1.86 - 2.28
8	1.6 - 2	1.51 - 1.88	2.28 - 2.85
9	2 - 2.2	1.88 - 2.07	2.85 - 3.13
10	2.2 - 3	2.07 - 2.83	3.13 - 4.25
11	3 - 4	2.83 - 3.77	4.25 - 5.66
12	4 - 5	3.77 - 4.71	5.66 - 7.07
13	5 - 5.5	4.71 - 5.18	7.07 - 7.77
14	5.5 - 7	5.18 - 6.60	7.77 - 9.88
15	7 - 10	6.60 - 9.43	9.88 - 14.1

*The particle diameter size ranges are defined as greater than the indicated lower limit and less than or equal to the indicated upper limit.

APPENDIX B

Certificates of Calibration

Certificate of Traceability

8500D-II THERMOANEMOMETER

Model No. 8500D-II **Serial No. 3810** **Part No. 634493200**

Certificate Number: **1046** Date: **26-Oct-98** P.O. **00329** Order/RMA: **104538**

Customer Number:

Calibration Standards Information

The following standards and equipment were used as references for this calibration.

Tested By	Date Tested	Inst. No.	Cal. Due	NIST Test Numbers
LOZADA	10/23/98	747	4/9/00	259340;257602;258909;258599;260222;811/258622;
		746	4/9/00	811/258522;811/260178;
		922	6/8/00	836/259947-98 ;
		881	11/16/98	811/257078 ; 247770 ; 253806 ; 811/255474 ; 253699 ; USN22783C ; Chem. Const. ; 254227 ; 811/254736 ; 811/251992 ; 251971 ; 811/251741 ; 811/253662 ; 811/256216 ; 611802 ;
		857	6/8/00	836/259947-98 ; ;
		794	3/18/99	
		666	2/21/00	811/255765 ; 251971 ; 811/259304-98 ; 811/257773 ; 256216 ; ;
		399	11/12/98	P-8531A ; P-8531B ; 38126 ; 254160 ; 255302 ;
		326	2/4/99	P-8531A ; P-8531B ; 38126 ; 254160 ; 259009 ;
		319	11/12/98	P-8531A ; P-8531B ; 38126 ; 254160 ; 255302 ;
		301	12/11/98	836/257126-96 ;

Alnor Instrument Company hereby certifies that the above designated equipment was found to meet or exceed manufacturing specificactions. Their calibration is traceable to the National Institute of Standards and Technology (NIST) or natural physical cogstants. The policies and procedures used comply with MIL-STD-45662A. This certificate shall not be reproduced except in full, without the written consent of Alnor.

Reviewed by

26-Oct-98

Date

ALNOR
A TSI® Company

Alnor Instrument Company
7555 N. Linder Avenue, Skokie, IL 60077
Tel. 847-677-3500 Fax. 847-677-3539

©GOES 346

Meriam Instrument
a Scott Fetzer company

FILE NO. 040FB:001-19
PAGE 1 OF 1

LETTER OF CERTIFICATION
LAMINAR FLOW ELEMENT

CUSTOMER NAME: RESEARCH TRIANGLE INST

CUSTOMER ORDER NUMBER: 00161

MERIAM ORDER NUMBER: 772900

Meriam Instrument certifies that the completed LFE unit has been calibrated and correlated at several points of flow rate using a Meriam Standard, which is controlled per the calibration system requirements of ANSI Z540-1 and traceable to the National Institute of Standards and Technology. The collective uncertainty of the measurement standards has a 1:1 ratio to the acceptable tolerance for the flow rate being calibrated.

The total rss uncertainty of the completed laminar flow unit is +/- .72 % of reading.

CUSTOMER ID NO.: 013716

MODEL NO.: 50MH10-8 SERIAL NO.: 758860-K1

FLOW CURVE/TABLE NO.: 30624

DATE OF CALIBRATION 11-11-1998 BY GEORGE ROBOTKAY

AS RECEIVED CONDITION: ✓ In Tolerance ____ Out of Tolerance ____ NA

AS LEFT CONDITION : ✓ In Tolerance ____ Out of Tolerance ____ NA

CALIBRATION INTERVAL: TO BE DETERMINED BY CUSTOMER BASED ON USAGE OF LFE.

FLOW STANDARD SERIAL NO.	DATE OF LAST CAL	DATE OF NEXT CAL
WMMC2-6	JAN 1998	JAN 1999

The LFE unit listed hereon has been successfully calibrated in accordance with Meriam Instrument Procedure A-35822.

QUALITY ASSURANCE INSPECTOR
MERIAM INSTRUMENT

Jack Weigand
QUALITY ASSURANCE MANAGER
MERIAM INSTRUMENT

10920 Madison Avenue • Cleveland, Ohio 44102 • (216) 281-1100 • FAX (216) 281-0228
www.meriam.com

CLIMET INSTRUMENTS COMPANY

1320 WEST COLTON AVE., REDLANDS, CA 92374 • PHONE: (909) 793-2788 • FAX: (909) 793-1738

CERTIFICATE OF CALIBRATION

INSTRUMENT CALIBRATED

MODEL: 226 aerosol particle counter, S/N 61882

CONTROL NUMBER: LCS03501

DATE CALIBRATED: 2 / 4 / 99 NEXT CALIBRATION: 8 / 4 / 99

RECOMMENDED CALIBRATION INTERVAL: 6 months

L. Sparks
CALIBRATED BY

Jean R. Guiter
APPROVED BY

TRACEABILITY STATEMENT

This instrument has been calibrated in accordance with ISO 10012-1/ANSI Z540-1 (which replaces MIL-STD-45662A) and relevant portions of Federal Standards 209, ASTM F-50, F322, and F328.

Temperature and Relative Humidity are not controlled during calibration because of the wide operating range of the instrument. The operating limits of this instrument are:

TEMPERATURE: 30°F TO 122°F
HUMIDITY: 0-100%, non-condensing

All test equipment used in the calibration of Climet Instruments' products is calibrated at six-month intervals by an outside calibration service. Calibration certificates for each piece of test equipment are on file at Climet; copies will be supplied if requested.

Calibration traceability to a National Measurement Standard (NMS) is established by using mono-disperse latex spheres as a calibration standard. These spheres are sized by methods traceable, by lot number, to the National Institute of Science and Technology.

APPENDIX C

Fractional Efficiency Data Sheets

Key to notation used in the following tables:

Diam.	Particle Diameter (µm)
U. Bckgrnd:	The upstream background particle counts measured with the aerosol generator off.
Upstream:	The upstream particle counts measured with the aerosol generator on.
D. Bckgrnd:	The downstream background particle counts measured with the aerosol generator off.
Downstream:	The downstream particle counts measured with the aerosol generator on.
Meas. Penetration:	The penetration computed as:

$$Meas.\ Penetration\ '\ \frac{(\ Downstream\ \ \&\ \ D.\ Bckgrnd\ )}{(\ Upstream\ \ \&\ \ U.\ Bckgrnd\ )}$$

P100 Correction Values:	Penetration values measured with no filter in the test section. These values are used to correct subsequent penetration measurements for particle losses within the test duct and sampling system.
Corrected Penetration:	The measured penetration corrected by the P100 values:

$$Corrected\ Penetration\ '\ \frac{Meas.Penetration}{P100\ Correction\ Values}$$

Corrected Efficiency (%):	100 x (1 - Corrected Penetration)
DQO	Data Quality Objective

Test No. 03299904
No Filter
Solid-Phase

Particle Counts per Indicated OPC Channel (1-Minute Samples @ 7.1 L/min)

OPC Channel Number						1	2	3	4	5	6	7	8	9	10	11	12	13	14	15
Min. Diam. (um)						0.45	0.59	0.73	0.80	1.02	1.44	1.86	2.28	2.85	3.13	4.25	5.66	7.07	7.77	9.88
Max. Diam. (um)						0.59	0.73	0.80	1.02	1.44	1.86	2.28	2.85	3.13	4.25	5.66	7.07	7.77	9.88	14.10
Geo. Mean Diam (um)						0.52	0.66	0.77	0.90	1.21	1.64	2.06	2.55	2.98	3.65	4.91	6.33	7.41	8.76	11.81
ENTER DATA BELOW																				
U. Bckgrnd	1	01	03-29-1999	09:31:34	01:00	0	0	0	0	0	0	0	0	0	1	0	0	0	0	0
Upstream	1	01	03-29-1999	09:39:28	01:00	10550	15720	5151	9104	13430	8282	10930	10210	2555	5375	3038	940	137	251	157
Upstream	1	01	03-29-1999	09:41:58	01:00	10440	15600	4987	9032	13570	8395	10610	9886	2459	5151	2959	945	161	248	154
Upstream	1	01	03-29-1999	09:44:28	01:00	10370	15250	4851	8994	13330	8075	10380	10050	2452	5043	3057	940	172	273	159
Upstream	1	01	03-29-1999	09:46:58	01:00	10360	15500	4861	8785	13170	8143	10540	9876	2419	5259	3062	1022	169	245	164
Upstream	1	01	03-29-1999	09:49:28	01:00	10240	15410	4874	8745	13340	8217	10260	9922	2451	5209	3049	1058	162	282	171
Upstream	1	01	03-29-1999	09:51:58	01:00	10160	15040	4985	8709	12960	8107	10340	9964	2416	5326	3187	1017	162	266	153
Upstream	1	01	03-29-1999	09:54:28	01:00	10100	15190	4832	8761	13240	7927	10300	9858	2386	5097	3044	983	127	271	167
Upstream	1	01	03-29-1999	09:56:58	01:00	10620	15840	5006	9490	13840	8390	10880	10490	2630	5361	3288	1104	172	273	219
Upstream	1	01	03-29-1999	09:59:28	01:00	10360	15440	4867	8976	13280	8438	10580	10110	2455	5218	3271	1044	165	287	170
Upstream	1	01	03-29-1999	10:01:58	01:00	10490	15650	4920	9147	13890	8393	10600	10100	2413	5377	3142	1106	160	295	194
U. Bckgrnd	1	01	03-29-1999	10:09:59	01:00	0	0	0	0	0	0	0	0	0	1	0	0	0	0	0
ENTER DATA BELOW																				
D. Bckgrnd	2	01	03-29-1999	09:32:49	01:00	0	1	0	0	0	0	0	0	0	0	1	0	0	0	0
Downstream	2	01	03-29-1999	09:40:43	01:00	10300	15410	5052	9035	13260	8165	10640	10080	2460	5158	3183	988	153	261	152
Downstream	2	01	03-29-1999	09:43:13	01:00	10480	15440	5047	9051	13480	8232	10650	9789	2485	5285	3041	967	152	264	157
Downstream	2	01	03-29-1999	09:45:43	01:00	10440	15260	4931	9053	13250	8190	10420	9964	2510	5293	3097	1006	154	250	175
Downstream	2	01	03-29-1999	09:48:13	01:00	10300	15330	4897	8942	13340	8072	10260	10090	2534	5356	3160	1038	169	246	170
Downstream	2	01	03-29-1999	09:50:43	01:00	10260	15320	4891	8967	13190	8080	10380	9940	2535	5344	3069	964	151	241	190
Downstream	2	01	03-29-1999	09:53:13	01:00	10200	15270	4827	8998	13120	8020	10380	10020	2554	5184	3217	995	174	258	170
Downstream	2	01	03-29-1999	09:55:43	01:00	10190	15080	4855	9013	13540	8046	10500	9958	2549	5356	3250	1064	164	270	183
Downstream	2	01	03-29-1999	09:58:13	01:00	10360	15180	4995	9209	13770	8241	10640	10090	2519	5371	3184	1110	168	270	166
Downstream	2	01	03-29-1999	10:00:43	01:00	10500	15660	4850	9240	13860	8252	10660	10180	2560	5421	3284	1087	169	299	167
Downstream	2	01	03-29-1999	10:03:13	01:00	10210	15200	4897	8946	13310	8022	10050	9904	2597	5249	3205	1144	166	271	144
D. Bckgrnd	2	01	03-29-1999	10:11:14	01:00	4	0	0	0	0	0	0	0	0	0	0	0	0	0	0
Meas. Penetration						1.00	0.99	1.00	1.01	1.00	0.99	0.99	1.00	1.03	1.01	1.02	1.02	1.02	0.98	0.98
P100 correction values						1.00	1.00	1.00	1.00	1.00	1.00	1.00	1.00	1.00	1.00	1.00	1.00	1.00	1.00	1.00
Corrected Penetration						1.00	0.99	1.00	1.01	1.00	0.99	0.99	1.00	1.03	1.01	1.02	1.02	1.02	0.98	0.98
Corrected Efficiency (%)						0	1	0	-1	0	1	1	0	-3	-1	-2	-2	-2	2	2
Data Acceptance Criteria:																				
Total Challenge Counts for Each Channel:						103690	154640	49334	89743	134050	82367	105420	100466	24636	52416	31097	10159	1587	2691	1708
Data Quality Objective:						> 500	> 500	> 500	> 500	> 500	> 500	> 500	> 500	> 500	> 500	> 500	> 500	> 500	> 500	> 500
Does this meet DQO:						Yes	Yes	Yes	Yes	Yes	Yes	Yes	Yes	Yes	Yes	Yes	Yes	Yes	Yes	Yes
Standard Deviation of Penetration for Each Channel :						0.02	0.02	0.03	0.03	0.03	0.02	0.03	0.02	0.03	0.03	0.04	0.09	0.11	0.09	0.14
Data Quality Objective:						<0.10	<0.10	<0.10	<0.10	<0.10	<0.10	<0.10	<0.10	<0.10	< 0.30	< 0.30	< 0.30	< 0.30	< 0.30	< 0.30
Does this meet DQO:						Yes	Yes	Yes	Yes	Yes	Yes	Yes	Yes	Yes	Yes	Yes	Yes	Yes	Yes	Yes
Maximum observed particle concentration (#/cc):						13.8														
Data Quality Objective: max. allowable conc. (#/cc):						< 23														
Does this meet the DQO:						Yes, (applies to all channels)														

Test No. 03299905
Arrestor
Solid-Phase

Particle Counts per Indicated OPC Channel (1-Minute Samples @ 7.1 L/min)

OPC Channel Number						1	2	3	4	5	6	7	8	9	10	11	12	13	14	15
Min. Diam. (um)						0.45	0.59	0.73	0.80	1.02	1.44	1.86	2.28	2.85	3.13	4.25	5.66	7.07	7.77	9.88
Max. Diam. (um)						0.59	0.73	0.80	1.02	1.44	1.86	2.28	2.85	3.13	4.25	5.66	7.07	7.77	9.88	14.10
Geo. Mean Diam (um)						0.52	0.66	0.77	0.90	1.21	1.64	2.06	2.55	2.98	3.65	4.91	6.33	7.41	8.76	11.81
ENTER DATA BELOW																				
U. Bckgrnd	1	01	03-29-1999	10:30:41	01:00	0	0	0	0	0	0	0	0	0	0	0	0	0	0	0
Upstream	1	01	03-29-1999	10:39:34	01:00	10600	15810	5097	9334	13570	8370	10840	10200	2505	5275	3200	1032	165	307	208
Upstream	1	01	03-29-1999	10:42:04	01:00	10520	15970	4964	9001	13480	8207	10570	10110	2395	5164	3000	1039	156	261	197
Upstream	1	01	03-29-1999	10:44:34	01:00	10190	15250	4989	8931	13160	8223	10380	10010	2498	5270	3001	1024	168	285	173
Upstream	1	01	03-29-1999	10:47:04	01:00	10280	15000	5109	8951	13310	8055	10390	9874	2349	5254	3188	1030	193	265	193
Upstream	1	01	03-29-1999	10:49:34	01:00	10210	15240	4873	8894	13150	7908	10390	9748	2398	5254	3210	1035	187	295	217
Upstream	1	01	03-29-1999	10:52:04	01:00	10060	14770	4702	8660	13150	7913	10200	9851	2476	5216	3127	1100	167	298	197
Upstream	1	01	03-29-1999	10:54:34	01:00	10160	15030	4909	8728	13100	7879	10200	9977	2465	5165	3140	1088	158	317	180
Upstream	1	01	03-29-1999	10:57:04	01:00	9783	14460	4692	8623	12770	7931	9907	9867	2463	5137	3161	1078	191	300	208
Upstream	1	01	03-29-1999	10:59:34	01:00	10320	15290	4912	9399	13610	8143	10380	10170	2476	5283	3394	1089	165	292	203
Upstream	1	01	03-29-1999	11:02:04	01:00	10180	14940	4874	8892	13400	8196	10250	10150	2557	5398	3212	1099	196	275	232
U. Bckgrnd	1	01	03-29-1999	11:10:00	01:00	0	0	1	0	0	0	1	0	0	0	0	0	0	0	0
ENTER DATA BELOW																				
D. Bckgrnd	2	01	03-29-1999	10:31:56	01:00	0	0	0	1	0	0	0	0	0	0	0	0	0	0	0
Downstream	2	01	03-29-1999	10:40:49	01:00	10440	15270	4803	8804	12330	7091	7841	5659	995	1320	357	90	11	19	19
Downstream	2	01	03-29-1999	10:43:19	01:00	10240	15130	4739	8415	12230	6877	7620	5341	979	1198	363	93	15	25	19
Downstream	2	01	03-29-1999	10:45:49	01:00	10150	14950	4700	8558	12300	6972	7713	5521	930	1310	398	78	16	18	19
Downstream	2	01	03-29-1999	10:48:19	01:00	9928	14670	4762	8435	12150	6842	7667	5473	1026	1408	335	74	9	32	17
Downstream	2	01	03-29-1999	10:50:49	01:00	9778	14390	4643	8295	11990	6712	7552	5417	934	1237	336	80	15	24	19
Downstream	2	01	03-29-1999	10:53:19	01:00	9763	14560	4639	8283	12030	6653	7556	5535	1011	1345	377	87	15	21	11
Downstream	2	01	03-29-1999	10:55:49	01:00	9982	14620	4622	8489	12150	6836	7480	5399	944	1273	406	79	12	19	12
Downstream	2	01	03-29-1999	10:58:19	01:00	9938	14360	4642	8478	12320	6818	7631	5501	980	1279	322	60	14	17	16
Downstream	2	01	03-29-1999	11:00:49	01:00	10030	14700	4788	8613	12390	6724	7638	5573	964	1235	325	52	8	9	14
Downstream	2	01	03-29-1999	11:03:19	01:00	9972	14550	4704	8513	12450	6642	7750	5657	921	1261	308	69	12	11	2
D. Bckgrnd	2	01	03-29-1999	11:11:15	01:00	7	6	0	1	0	0	0	1	0	0	1	0	0	0	0
Meas. Penetration						0.98	0.97	0.96	0.95	0.92	0.84	0.74	0.55	0.39	0.25	0.11	0.07	0.07	0.07	0.07
P100 correction values						1.00	0.99	1.00	1.01	1.00	0.99	0.99	1.00	1.03	1.01	1.02	1.02	1.02	0.98	0.98
Corrected Penetration						0.98	0.98	0.96	0.94	0.92	0.85	0.74	0.55	0.38	0.24	0.11	0.07	0.07	0.07	0.08
Corrected Efficiency (%)						2	2	4	6	8	15	26	45	62	76	89	93	93	93	92
Data Acceptance Criteria:																				
Total Challenge Counts for Each Channel:						102303	151760	49121	89413	132700	80825	103507	99957	24582	52416	31633	10614	1746	2895	2008
Data Quality Objective:						> 500	> 500	> 500	> 500	> 500	> 500	> 500	> 500	> 500	> 500	> 500	> 500	> 500	> 500	> 500
Does this meet DQO:						Yes	Yes	Yes	Yes	Yes	Yes	Yes	Yes	Yes	Yes	Yes	Yes	Yes	Yes	Yes
Standard Deviation of Penetration for Each Channel :						0.03	0.04	0.03	0.03	0.02	0.02	0.02	0.01	0.02	0.01	0.01	0.01	0.02	0.02	0.03
Data Quality Objective:						<0.10	<0.10	<0.10	<0.10	<0.10	<0.10	<0.10	<0.10	<0.10	< 0.30	< 0.30	< 0.30	< 0.30	< 0.30	< 0.30
Does this meet DQO:						Yes	Yes	Yes	Yes	Yes	Yes	Yes	Yes	Yes	Yes	Yes	Yes	Yes	Yes	Yes
Maximum observed particle concentration (#/cc):						13.7														
Data Quality Objective: max. allowable conc. (#/cc):						< 23														
Does this meet the DQO:						Yes, (applies to all channels)														

Test No. 03299906
No Filter
Solid-Phase

Particle Counts per Indicated OPC Channel (1-Minute Samples @ 7.1 L/min)

OPC Channel Number						1	2	3	4	5	6	7	8	9	10	11	12	13	14	15
Min. Diam. (um)						0.45	0.59	0.73	0.80	1.02	1.44	1.86	2.28	2.85	3.13	4.25	5.66	7.07	7.77	9.88
Max. Diam. (um)						0.59	0.73	0.80	1.02	1.44	1.86	2.28	2.85	3.13	4.25	5.66	7.07	7.77	9.88	14.10
Geo. Mean Diam (um)						0.52	0.66	0.77	0.90	1.21	1.64	2.06	2.55	2.98	3.65	4.91	6.33	7.41	8.76	11.81
ENTER DATA BELOW																				
U. Bckgrnd	1	01	03-29-1999	11:26:52	01:00	2	3	0	0	0	1	1	1	0	0	0	0	0	0	0
Upstream	1	01	03-29-1999	11:35:52	01:00	11180	16700	5362	9546	14390	8831	11320	10540	2692	5587	3249	1068	173	284	208
Upstream	1	01	03-29-1999	11:38:22	01:00	11130	17030	5330	9710	14550	8879	11440	10740	2627	5509	3288	1137	177	291	209
Upstream	1	01	03-29-1999	11:40:52	01:00	11160	16450	5258	9636	14640	8751	11330	10630	2581	5497	3252	1129	207	276	180
Upstream	1	01	03-29-1999	11:43:22	01:00	10930	16190	5167	9556	13890	8656	11100	10360	2449	5226	3235	1032	201	304	198
Upstream	1	01	03-29-1999	11:45:52	01:00	10950	16820	5257	9612	14070	8658	11150	10330	2582	5350	3267	1088	150	273	189
Upstream	1	01	03-29-1999	11:50:52	01:00	10210	15310	4856	8948	13510	8190	10480	9927	2532	5298	3253	1082	181	317	235
Upstream	1	01	03-29-1999	11:53:22	01:00	10500	15470	5003	9129	13330	8121	10660	10290	2584	5226	3259	1215	191	324	201
Upstream	1	01	03-29-1999	11:55:52	01:00	10220	15350	4870	9099	13580	8232	10560	10120	2423	5435	3178	1107	197	315	204
Upstream	1	01	03-29-1999	11:58:22	01:00	10720	15660	5126	9180	13940	8503	10740	10480	2597	5588	3344	1141	203	310	202
Upstream	1	01	03-29-1999	12:09:50	01:00	10050	14680	4771	8792	12920	8022	10400	10230	2558	5410	3257	1209	212	312	224
U. Bckgrnd	1	01	03-29-1999	12:17:16	01:00	2	0	2	0	2	1	2	1	0	0	0	0	0	0	0
ENTER DATA BELOW																				
D. Bckgrnd	2	01	03-29-1999	11:28:07	01:00	1	0	0	0	2	0	0	0	0	0	0	0	0	0	0
Downstream	2	01	03-29-1999	11:37:07	01:00	11080	16670	5326	9508	14250	8707	11250	10480	2604	5486	3437	1109	184	291	193
Downstream	2	01	03-29-1999	11:39:37	01:00	10980	16160	5107	9468	14170	8583	10990	10430	2622	5485	3295	1127	161	264	184
Downstream	2	01	03-29-1999	11:42:07	01:00	10850	16670	5168	9629	14320	8824	11340	10480	2627	5456	3369	1107	189	243	188
Downstream	2	01	03-29-1999	11:44:37	01:00	10800	16020	5134	9212	13730	8419	10840	10180	2503	5316	3301	1023	188	285	183
Downstream	2	01	03-29-1999	11:47:07	01:00	10630	15660	4987	9163	13380	8356	10560	10050	2415	5113	3195	1017	167	278	181
Downstream	2	01	03-29-1999	11:52:07	01:00	10760	15680	5125	9395	13700	8483	10700	10270	2551	5539	3423	1141	190	307	204
Downstream	2	01	03-29-1999	11:54:37	01:00	10470	15690	4937	9102	13780	8259	10840	10480	2455	5579	3432	1187	181	318	205
Downstream	2	01	03-29-1999	11:57:07	01:00	10580	15370	4917	9243	13640	8304	10810	10250	2632	5437	3412	1120	171	300	181
Downstream	2	01	03-29-1999	11:59:37	01:00	10280	15380	4941	9166	13700	8417	10850	10290	2582	5459	3470	1164	168	298	219
Downstream	2	01	03-29-1999	12:11:05	01:00	9867	14600	4688	8693	12930	7639	10190	9951	2508	5515	3313	1198	186	339	238
D. Bckgrnd	2	01	03-29-1999	12:18:31	01:00	10	0	0	0	0	8	1	0	0	0	0	0	0	0	0
Meas. Penetration						0.99	0.99	0.99	0.99	0.99	0.99	0.99	0.99	1.00	1.00	1.03	1.00	0.94	0.97	0.96
P100 correction values						1.00	1.00	1.00	1.00	1.00	1.00	1.00	1.00	1.00	1.00	1.00	1.00	1.00	1.00	1.00
Corrected Penetration						0.99	0.99	0.99	0.99	0.99	0.99	0.99	0.99	1.00	1.00	1.03	1.00	0.94	0.97	0.96
Corrected Efficiency (%)						1	1	1	1	1	1	1	1	0	0	-3	0	6	3	4

Data Acceptance Criteria:

Total Challenge Counts for Each Channel:	107050	159660	51000	93208	138820	84843	109180	103647	25625	54126	32582	11208	1892	3006	2050
Data Quality Objective:	> 500	> 500	> 500	> 500	> 500	> 500	> 500	> 500	> 500	> 500	> 500	> 500	> 500	> 500	> 500
Does this meet DQO:	Yes	Yes	Yes	Yes	Yes	Yes	Yes	Yes	Yes	Yes	Yes	Yes	Yes	Yes	Yes
Standard Deviation of Penetration for Each Channel :	0.05	0.06	0.05	0.04	0.05	0.05	0.05	0.03	0.04	0.04	0.03	0.08	0.11	0.11	0.12
Data Quality Objective:	<0.10	<0.10	<0.10	<0.10	<0.10	<0.10	<0.10	<0.10	<0.10	< 0.30	< 0.30	< 0.30	< 0.30	< 0.30	< 0.30
Does this meet DQO:	Yes	Yes	Yes	Yes	Yes	Yes	Yes	Yes	Yes	Yes	Yes	Yes	Yes	Yes	Yes

Maximum observed particle concentration (#/cc):	14.4
Data Quality Objective: max. allowable conc. (#/cc):	< 23
Does this meet the DQO:	Yes, (applies to all channels)

Test No. 03299907
Arrestor
Solid-Phase

Particle Counts per Indicated OPC Channel (1-Minute Samples @ 7.1 L/min)

OPC Channel Number						1	2	3	4	5	6	7	8	9	10	11	12	13	14	15
Min. Diam. (um)						0.45	0.59	0.73	0.80	1.02	1.44	1.86	2.28	2.85	3.13	4.25	5.66	7.07	7.77	9.88
Max. Diam. (um)						0.59	0.73	0.80	1.02	1.44	1.86	2.28	2.85	3.13	4.25	5.66	7.07	7.77	9.88	14.10
Geo. Mean Diam (um)						0.52	0.66	0.77	0.90	1.21	1.64	2.06	2.55	2.98	3.65	4.91	6.33	7.41	8.76	11.81
ENTER DATA BELOW																				
U. Bckgrnd	1	01	03-29-1999	13:01:01	01:00	3	0	0	0	0	0	0	0	0	1	0	1	0	0	0
Upstream	1	01	03-29-1999	13:09:12	01:00	10610	15690	5020	8922	13250	7955	10440	9835	2423	5067	2964	985	156	248	176
Upstream	1	01	03-29-1999	13:11:42	01:00	10300	15390	4893	8997	13080	7990	10520	9621	2390	5045	3024	940	145	263	173
Upstream	1	01	03-29-1999	13:14:12	01:00	10390	15400	4914	8903	13040	8104	10280	9552	2429	5033	3218	968	148	288	172
Upstream	1	01	03-29-1999	13:16:42	01:00	10130	14900	4659	8510	12710	7740	10110	9481	2262	4830	2957	921	158	259	204
Upstream	1	01	03-29-1999	13:19:12	01:00	10160	15200	4907	8928	12790	8004	10310	9754	2386	4930	3062	1002	196	282	189
Upstream	1	01	03-29-1999	13:21:42	01:00	10110	15250	4808	8910	13170	8152	10380	9986	2372	5172	3173	1015	162	289	209
Upstream	1	01	03-29-1999	13:24:12	01:00	10210	15020	4959	8916	13360	8018	10420	10040	2424	5338	3141	1071	172	277	212
Upstream	1	01	03-29-1999	13:26:42	01:00	10100	14930	4890	8932	13320	7954	10320	10130	2524	5294	3249	1057	194	292	194
Upstream	1	01	03-29-1999	13:29:12	01:00	10050	14990	4903	8631	12970	7774	10140	9717	2484	5107	3246	1066	198	280	187
Upstream	1	01	03-29-1999	13:31:42	01:00	9929	14270	4794	8619	12620	7664	10160	9661	2413	5064	3111	1043	174	287	219
U. Bckgrnd	1	01	03-29-1999	13:41:26	01:00	0	0	0	0	0	0	0	0	0	0	0	0	0	0	0
ENTER DATA BELOW																				
D. Bckgrnd	2	01	03-29-1999	13:02:16	01:00	4	2	0	0	1	0	0	0	0	0	0	0	0	0	0
Downstream	2	01	03-29-1999	13:10:27	01:00	339	344	52	78	53	15	18	9	1	6	0	0	0	0	0
Downstream	2	01	03-29-1999	13:12:57	01:00	386	371	74	78	72	24	12	11	0	5	3	0	0	0	0
Downstream	2	01	03-29-1999	13:15:27	01:00	331	348	58	88	62	21	17	7	0	2	3	1	0	1	0
Downstream	2	01	03-29-1999	13:17:57	01:00	382	331	63	80	65	22	18	6	3	3	2	1	0	0	0
Downstream	2	01	03-29-1999	13:20:27	01:00	292	313	58	75	46	13	13	9	1	6	2	1	2	0	0
Downstream	2	01	03-29-1999	13:22:57	01:00	309	323	47	75	57	21	19	11	0	6	1	0	0	0	0
Downstream	2	01	03-29-1999	13:25:27	01:00	314	286	57	75	56	16	12	11	1	4	4	0	0	1	0
Downstream	2	01	03-29-1999	13:27:57	01:00	346	316	58	77	58	14	20	5	3	4	3	2	0	0	0
Downstream	2	01	03-29-1999	13:30:27	01:00	349	354	81	88	66	18	17	15	1	6	3	1	0	0	0
Downstream	2	01	03-29-1999	13:32:57	01:00	361	360	65	89	66	15	13	10	2	3	0	1	0	0	1
D. Bckgrnd	2	01	03-29-1999	13:42:41	01:00	2	0	0	1	0	3	1	0	0	1	0	0	0	0	0
Meas. Penetration						0.03	0.02	0.01	0.01	0.00	0.00	0.00	0.00	0.00	0.00	0.00	0.00	0.00	0.00	0.00
P100 correction values						0.99	0.99	0.99	0.99	0.99	0.99	0.99	0.99	1.00	1.00	1.03	1.00	0.94	0.97	0.96
Corrected Penetration						0.03	0.02	0.01	0.01	0.00	0.00	0.00	0.00	0.00	0.00	0.00	0.00	0.00	0.00	0.00
Corrected Efficiency (%)						97	98	99	99	100	100	100	100	100	100	100	100	100	100	100
Data Acceptance Criteria:																				
Total Challenge Counts for Each Channel:						101989	151040	48747	88268	130310	79355	103080	97777	24107	50880	31145	10068	1703	2765	1935
Data Quality Objective:						> 500	> 500	> 500	> 500	> 500	> 500	> 500	> 500	> 500	> 500	> 500	> 500	> 500	> 500	> 500
Does this meet DQO:						Yes	Yes	Yes	Yes	Yes	Yes	Yes	Yes	Yes	Yes	Yes	Yes	Yes	Yes	Yes
Standard Deviation of Penetration for Each Channel :						0.00	0.00	0.00	0.00	0.00	0.00	0.00	0.00	0.00	0.00	0.00	0.00	0.00	0.00	0.00
Data Quality Objective:						<0.10	<0.10	<0.10	<0.10	<0.10	<0.10	<0.10	<0.10	<0.10	< 0.30	< 0.30	< 0.30	< 0.30	< 0.30	< 0.30
Does this meet DQO:						Yes	Yes	Yes	Yes	Yes	Yes	Yes	Yes	Yes	Yes	Yes	Yes	Yes	Yes	Yes
Maximum observed particle concentration (#/cc):						13.3														
Data Quality Objective: max. allowable conc. (#/cc):						< 23														
Does this meet the DQO:						Yes, (applies to all channels)														

Test No. 03299908
No Filter
Solid-Phase

Particle Counts per Indicated OPC Channel (1-Minute Samples @ 7.1 L/min)

OPC Channel Number						1	2	3	4	5	6	7	8	9	10	11	12	13	14	15
Min. Diam. (um)						0.45	0.59	0.73	0.80	1.02	1.44	1.86	2.28	2.85	3.13	4.25	5.66	7.07	7.77	9.88
Max. Diam. (um)						0.59	0.73	0.80	1.02	1.44	1.86	2.28	2.85	3.13	4.25	5.66	7.07	7.77	9.88	14.10
Geo. Mean Diam (um)						0.52	0.66	0.77	0.90	1.21	1.64	2.06	2.55	2.98	3.65	4.91	6.33	7.41	8.76	11.81
ENTER DATA BELOW																				
U. Bckgrnd	1	01	03-29-1999	13:58:19	01:00	1	2	0	0	0	1	0	2	0	0	0	0	0	0	0
Upstream	1	01	03-29-1999	14:06:05	01:00	10390	15560	4946	9150	13350	8131	10600	10020	2448	5242	3124	1106	192	278	181
Upstream	1	01	03-29-1999	14:08:35	01:00	10290	15080	4806	8793	13230	7894	10310	9825	2439	5029	3033	1003	176	301	184
Upstream	1	01	03-29-1999	14:11:05	01:00	10360	15250	4905	8883	12920	7974	10480	9828	2406	5099	2987	976	150	268	170
Upstream	1	01	03-29-1999	14:13:35	01:00	10320	15300	4864	8760	13200	8095	10330	9589	2301	5013	3058	970	154	237	185
Upstream	1	01	03-29-1999	14:16:05	01:00	10070	15230	4930	8841	13290	7998	10490	9775	2405	4995	3144	1020	170	242	191
Upstream	1	01	03-29-1999	14:18:35	01:00	9981	14570	4683	8850	12760	7730	10180	9816	2429	5155	3030	1092	167	282	180
Upstream	1	01	03-29-1999	14:21:05	01:00	9757	14790	4573	8670	12940	8026	10310	9967	2629	5273	3317	1066	184	325	187
Upstream	1	01	03-29-1999	14:23:35	01:00	9922	14560	4736	8591	12740	7740	10030	9913	2534	5241	3260	1082	192	319	185
Upstream	1	01	03-29-1999	14:26:05	01:00	9878	14540	4686	8831	12750	7722	10130	9785	2454	5225	3103	1090	180	331	210
Upstream	1	01	03-29-1999	14:28:35	01:00	9971	14430	4649	8577	12920	7650	10140	9714	2339	5117	3163	1066	176	286	211
U. Bckgrnd	1	01	03-29-1999	14:40:05	01:00	1	0	0	0	1	0	0	0	0	0	0	0	0	0	0
ENTER DATA BELOW																				
D. Bckgrnd	2	01	03-29-1999	13:59:34	01:00	0	1	0	0	0	0	0	0	0	0	0	0	0	0	0
Downstream	2	01	03-29-1999	14:07:20	01:00	10290	15160	4792	8780	13150	8071	10380	9759	2339	5257	3069	988	155	282	187
Downstream	2	01	03-29-1999	14:09:50	01:00	10310	15670	4750	8920	13380	8178	10330	10000	2579	5309	3131	996	171	304	189
Downstream	2	01	03-29-1999	14:12:20	01:00	10540	15340	5000	8859	13250	8200	10510	9919	2463	5191	3108	1000	132	265	160
Downstream	2	01	03-29-1999	14:14:50	01:00	10140	15180	4771	8824	12830	7962	10270	9670	2354	5115	3086	1031	179	272	181
Downstream	2	01	03-29-1999	14:17:20	01:00	10110	15190	4842	8955	13090	8077	10420	9759	2379	5164	3059	992	154	298	203
Downstream	2	01	03-29-1999	14:19:50	01:00	9959	14420	4696	8596	12920	7921	10260	10050	2523	5318	3334	1111	194	319	194
Downstream	2	01	03-29-1999	14:22:20	01:00	9689	14400	4628	8479	12660	7779	9712	9970	2527	5221	3162	1109	181	306	210
Downstream	2	01	03-29-1999	14:24:50	01:00	9885	14450	4597	8558	12690	7938	10050	9750	2511	5379	3326	1067	173	288	186
Downstream	2	01	03-29-1999	14:27:20	01:00	9841	14380	4700	8467	12710	7687	10060	9826	2425	5332	3182	1168	174	286	183
Downstream	2	01	03-29-1999	14:29:50	01:00	9895	14570	4706	8676	13120	7889	10180	9811	2488	5297	3254	1054	190	307	206
D. Bckgrnd	2	01	03-29-1999	14:41:20	01:00	1	0	0	0	0	0	0	0	0	0	0	0	0	0	0
Meas. Penetration						1.00	1.00	0.99	0.99	1.00	1.01	0.99	1.00	1.01	1.02	1.02	1.00	0.98	1.02	1.01
P100 correction values						1.00	1.00	1.00	1.00	1.00	1.00	1.00	1.00	1.00	1.00	1.00	1.00	1.00	1.00	1.00
Corrected Penetration						1.00	1.00	0.99	0.99	1.00	1.01	0.99	1.00	1.01	1.02	1.02	1.00	0.98	1.02	1.01
Corrected Efficiency (%)						0	0	1	1	0	-1	1	0	-1	-2	-2	0	2	-2	-1
Data Acceptance Criteria:																				
Total Challenge Counts for Each Channel:						100939	149310	47778	87946	130100	78960	103000	98232	24384	51389	31219	10471	1741	2869	1884
Data Quality Objective:						> 500	> 500	> 500	> 500	> 500	> 500	> 500	> 500	> 500	> 500	> 500	> 500	> 500	> 500	> 500
Does this meet DQO:						Yes	Yes	Yes	Yes	Yes	Yes	Yes	Yes	Yes	Yes	Yes	Yes	Yes	Yes	Yes
Standard Deviation of Penetration for Each Channel :						0.03	0.04	0.04	0.03	0.03	0.03	0.03	0.02	0.05	0.03	0.05	0.08	0.13	0.13	0.10
Data Quality Objective:						<0.10	<0.10	<0.10	<0.10	<0.10	<0.10	<0.10	<0.10	<0.10	< 0.30	< 0.30	< 0.30	< 0.30	< 0.30	< 0.30
Does this meet DQO:						Yes	Yes	Yes	Yes	Yes	Yes	Yes	Yes	Yes	Yes	Yes	Yes	Yes	Yes	Yes
Maximum observed particle concentration (#/cc):						13.4														
Data Quality Objective: max. allowable conc. (#/cc):						< 23														
Does this meet the DQO:						Yes, (applies to all channels)														

Test No. 03299909
Arrestor or No Filter
Solid-Phase

Particle Counts per Indicated OPC Channel (1-Minute Samples @ 7.1 L/min)

OPC Channel Number						1	2	3	4	5	6	7	8	9	10	11	12	13	14	15
Min. Diam. (um)						0.45	0.59	0.73	0.80	1.02	1.44	1.86	2.28	2.85	3.13	4.25	5.66	7.07	7.77	9.88
Max. Diam. (um)						0.59	0.73	0.80	1.02	1.44	1.86	2.28	2.85	3.13	4.25	5.66	7.07	7.77	9.88	14.10
Geo. Mean Diam (um)						0.52	0.66	0.77	0.90	1.21	1.64	2.06	2.55	2.98	3.65	4.91	6.33	7.41	8.76	11.81
ENTER DATA BELOW																				
U. Bckgrnd	1	01	03-29-1999	15:29:09	01:00	0	0	0	0	0	1	0	0	0	0	0	0	0	0	0
Upstream	1	01	03-29-1999	15:38:10	01:00	10850	16050	5118	9378	13990	8592	11040	10470	2449	5246	3249	1149	160	288	188
Upstream	1	01	03-29-1999	15:40:40	01:00	10770	16400	5315	9390	14100	8607	11330	10620	2608	5573	3233	1030	191	300	211
Upstream	1	01	03-29-1999	15:43:10	01:00	10890	16220	5208	9577	14210	8659	11220	10450	2595	5479	3265	1026	167	306	209
Upstream	1	01	03-29-1999	15:45:40	01:00	10970	16030	5166	9296	13820	8441	11110	10400	2471	5395	3364	1200	190	282	179
Upstream	1	01	03-29-1999	15:48:10	01:00	10770	15850	5129	9540	14020	8590	11180	10680	2656	5568	3477	1154	218	319	239
Upstream	1	01	03-29-1999	15:50:40	01:00	10780	16240	5189	9354	14130	8627	11320	10960	2732	5593	3453	1180	191	334	236
Upstream	1	01	03-29-1999	15:53:10	01:00	10710	15650	5025	9283	13790	8586	11150	10730	2668	5655	3480	1227	170	357	234
Upstream	1	01	03-29-1999	15:55:40	01:00	10360	15530	4889	9241	13940	8375	10940	10560	2612	5492	3386	1198	183	329	229
Upstream	1	01	03-29-1999	15:58:10	01:00	10360	15610	4853	9282	13680	8281	10880	10720	2579	5574	3527	1167	205	337	215
Upstream	1	01	03-29-1999	16:00:40	01:00	10380	15660	5097	9101	13650	8155	10940	10450	2610	5584	3378	1156	195	362	214
U. Bckgrnd	1	01	03-29-1999	16:09:41	01:00	1	0	0	0	0	0	0	0	1	0	0	0	0	0	0
ENTER DATA BELOW																				
D. Bckgrnd	2	01	03-29-1999	15:30:24	01:00	0	0	0	0	0	0	0	0	0	0	0	0	0	0	0
Downstream	2	01	03-29-1999	15:39:25	01:00	394	415	80	103	88	26	22	14	2	2	1	3	1	1	0
Downstream	2	01	03-29-1999	15:41:55	01:00	336	295	66	77	61	18	14	8	2	5	5	0	0	0	0
Downstream	2	01	03-29-1999	15:44:25	01:00	338	317	57	75	62	23	17	10	4	3	1	1	0	0	0
Downstream	2	01	03-29-1999	15:46:55	01:00	342	326	49	89	70	22	15	13	3	6	5	1	0	0	0
Downstream	2	01	03-29-1999	15:49:25	01:00	389	360	69	108	56	23	13	18	2	3	3	0	0	0	0
Downstream	2	01	03-29-1999	15:51:55	01:00	465	359	76	103	81	24	14	10	1	7	2	0	0	0	0
Downstream	2	01	03-29-1999	15:54:25	01:00	405	354	75	93	86	21	24	9	2	3	3	2	1	0	0
Downstream	2	01	03-29-1999	15:56:55	01:00	405	359	69	95	82	24	22	16	1	2	3	1	0	1	1
Downstream	2	01	03-29-1999	15:59:25	01:00	408	395	81	116	70	30	8	10	2	2	2	1	0	0	0
Downstream	2	01	03-29-1999	16:01:55	01:00	343	369	92	112	74	18	10	15	3	3	5	2	1	0	1
D. Bckgrnd	2	01	03-29-1999	16:10:56	01:00	2	1	0	0	5	0	0	0	0	0	0	0	0	0	0
Meas. Penetration						0.04	0.02	0.01	0.01	0.01	0.00	0.00	0.00	0.00	0.00	0.00	0.00	0.00	0.00	0.00
P100 correction values						1.00	1.00	0.99	0.99	1.00	1.01	0.99	1.00	1.01	1.02	1.02	1.00	0.98	1.02	1.01
Corrected Penetration						0.04	0.02	0.01	0.01	0.01	0.00	0.00	0.00	0.00	0.00	0.00	0.00	0.00	0.00	0.00
Corrected Efficiency (%)						96	98	99	99	99	100	100	100	100	100	100	100	100	100	100

Data Acceptance Criteria:

Total Challenge Counts for Each Channel:	106840	159240	50989	93442	139330	84913	111110	106040	25980	55159	33812	11487	1870	3214	2154
Data Quality Objective:	> 500	> 500	> 500	> 500	> 500	> 500	> 500	> 500	> 500	> 500	> 500	> 500	> 500	> 500	> 500
Does this meet DQO:	Yes	Yes	Yes	Yes	Yes	Yes	Yes	Yes	Yes	Yes	Yes	Yes	Yes	Yes	Yes
Standard Deviation of Penetration for Each Channel :	0.00	0.00	0.00	0.00	0.00	0.00	0.00	0.00	0.00	0.00	0.00	0.00	0.00	0.00	0.00
Data Quality Objective:	<0.10	<0.10	<0.10	<0.10	<0.10	<0.10	<0.10	<0.10	<0.10	< 0.30	< 0.30	< 0.30	< 0.30	< 0.30	< 0.30
Does this meet DQO:	Yes	Yes	Yes	Yes	Yes	Yes	Yes	Yes	Yes	Yes	Yes	Yes	Yes	Yes	Yes

Maximum observed particle concentration (#/cc):	14.2
Data Quality Objective: max. allowable conc. (#/cc):	< 23
Does this meet the DQO:	Yes, (applies to all channels)

Test No. 03309901
No Filter
Solid-Phase

Particle Counts per Indicated OPC Channel (1-Minute Samples @ 7.1 L/min)

OPC Channel Number						1	2	3	4	5	6	7	8	9	10	11	12	13	14	15
Min. Diam. (um)						0.45	0.59	0.73	0.80	1.02	1.44	1.86	2.28	2.85	3.13	4.25	5.66	7.07	7.77	9.88
Max. Diam. (um)						0.59	0.73	0.80	1.02	1.44	1.86	2.28	2.85	3.13	4.25	5.66	7.07	7.77	9.88	14.10
Geo. Mean Diam (um)						0.52	0.66	0.77	0.90	1.21	1.64	2.06	2.55	2.98	3.65	4.91	6.33	7.41	8.76	11.81
ENTER DATA BELOW																				
U. Bckgrnd	1	01	03-30-1999	09:13:53	01:00	0	0	0	0	2	0	0	0	0	0	0	0	0	0	0
Upstream	1	01	03-30-1999	09:25:25	01:00	10830	15700	5119	9351	13650	8493	10890	10770	2567	5497	3076	951	167	280	168
Upstream	1	01	03-30-1999	09:27:55	01:00	10730	15950	5174	9263	13800	8543	10920	10750	2687	5528	3055	966	135	258	181
Upstream	1	01	03-30-1999	09:30:25	01:00	10530	15670	5160	8890	13370	8284	10830	10410	2497	5418	2957	990	178	239	171
Upstream	1	01	03-30-1999	09:32:55	01:00	10440	15610	4922	9201	13410	8339	10690	10350	2540	5337	3015	907	141	283	177
Upstream	1	01	03-30-1999	09:35:25	01:00	10380	15430	4938	9026	13220	8198	10530	10340	2488	5298	2941	938	129	268	168
Upstream	1	01	03-30-1999	09:37:55	01:00	9492	13930	4606	8233	12130	7399	9677	9425	2402	4830	2799	963	123	274	144
Upstream	1	01	03-30-1999	09:40:25	01:00	10450	14930	4906	8893	13280	8019	10370	10420	2675	5394	3145	1041	125	282	182
Upstream	1	01	03-30-1999	09:42:55	01:00	10400	15330	4962	8882	13160	7960	10370	10200	2608	5353	3052	1022	182	275	172
Upstream	1	01	03-30-1999	09:45:25	01:00	10130	14930	4770	8706	12970	7793	10300	10070	2561	5330	3059	978	157	260	179
Upstream	1	01	03-30-1999	09:47:55	01:00	10420	15440	4878	8794	13450	8116	10670	10400	2502	5349	3047	951	146	296	172
U. Bckgrnd	1	01	03-30-1999	10:00:37	01:00	1	0	0	0	0	0	0	0	0	0	0	0	0	0	0
ENTER DATA BELOW																				
D. Bckgrnd	2	01	03-30-1999	09:15:08	01:00	0	0	0	0	0	0	0	0	0	0	0	0	0	0	0
Downstream	2	01	03-30-1999	09:26:40	01:00	10910	15880	5211	9252	13960	8695	10940	10690	2652	5729	3149	953	135	225	164
Downstream	2	01	03-30-1999	09:29:10	01:00	10690	15820	5142	9437	14020	8493	10800	10490	2624	5671	3069	921	132	211	174
Downstream	2	01	03-30-1999	09:31:40	01:00	10740	15820	5017	9262	13450	8156	10700	10450	2724	5614	3073	923	159	215	178
Downstream	2	01	03-30-1999	09:34:10	01:00	10390	15670	4900	9133	13250	8210	10460	10270	2595	5425	3176	933	160	251	150
Downstream	2	01	03-30-1999	09:36:40	01:00	10460	15330	4883	8913	13170	8269	10460	10240	2543	5255	2966	898	135	201	132
Downstream	2	01	03-30-1999	09:39:10	01:00	10250	15150	4866	8872	13180	8221	10430	10610	2626	5523	3182	939	164	256	137
Downstream	2	01	03-30-1999	09:41:40	01:00	10300	15340	4693	9140	13420	8023	10510	10550	2604	5619	3149	946	147	246	152
Downstream	2	01	03-30-1999	09:44:10	01:00	10200	15100	4805	8899	13480	8230	10410	10630	2702	5591	3175	1028	143	203	148
Downstream	2	01	03-30-1999	09:46:40	01:00	10320	15220	4876	9180	13480	8471	10640	10380	2565	5563	3083	941	157	229	178
Downstream	2	01	03-30-1999	09:49:10	01:00	10540	15190	4850	9170	13910	8499	10700	10620	2693	5616	2997	925	131	215	174
D. Bckgrnd	2	01	03-30-1999	10:01:52	01:00	1	0	0	2	2	0	0	3	0	2	0	0	0	0	0
Meas. Penetration						1.01	1.01	1.00	1.02	1.02	1.03	1.01	1.02	1.03	1.04	1.03	0.97	0.99	0.83	0.93
P100 correction values						1.00	1.00	1.00	1.00	1.00	1.00	1.00	1.00	1.00	1.00	1.00	1.00	1.00	1.00	1.00
Corrected Penetration						1.01	1.01	1.00	1.02	1.02	1.03	1.01	1.02	1.03	1.04	1.03	0.97	0.99	0.83	0.93
Corrected Efficiency (%)						-1	-1	0	-2	-2	-3	-1	-2	-3	-4	-3	3	1	17	7
Data Acceptance Criteria:																				
Total Challenge Counts for Each Channel:						103802	152920	49435	89239	132440	81144	105247	103135	25527	53334	30146	9707	1483	2715	1714
Data Quality Objective:						> 500	> 500	> 500	> 500	> 500	> 500	> 500	> 500	> 500	> 500	> 500	> 500	> 500	> 500	> 500
Does this meet DQO:						Yes	Yes	Yes	Yes	Yes	Yes	Yes	Yes	Yes	Yes	Yes	Yes	Yes	Yes	Yes
Standard Deviation of Penetration for Each Channel :						0.04	0.04	0.05	0.04	0.04	0.05	0.04	0.04	0.04	0.05	0.04	0.05	0.17	0.09	0.12
Data Quality Objective:						<0.10	<0.10	<0.10	<0.10	<0.10	<0.10	<0.10	<0.10	<0.10	< 0.30	< 0.30	< 0.30	< 0.30	< 0.30	< 0.30
Does this meet DQO:						Yes	Yes	Yes	Yes	Yes	Yes	Yes	Yes	Yes	Yes	Yes	Yes	Yes	Yes	Yes
Maximum observed particle concentration (#/cc):						13.9														
Data Quality Objective: max. allowable conc. (#/cc):						< 23														
Does this meet the DQO:						Yes, (applies to all channels)														

Test No. 03319903
Arrestor
Solid-Phase

Particle Counts per Indicated OPC Channel (1-Minute Samples @ 7.1 L/min)

OPC Channel Number						1	2	3	4	5	6	7	8	9	10	11	12	13	14	15
Min. Diam. (um)						0.45	0.59	0.73	0.80	1.02	1.44	1.86	2.28	2.85	3.13	4.25	5.66	7.07	7.77	9.88
Max. Diam. (um)						0.59	0.73	0.80	1.02	1.44	1.86	2.28	2.85	3.13	4.25	5.66	7.07	7.77	9.88	14.10
Geo. Mean Diam (um)						0.52	0.66	0.77	0.90	1.21	1.64	2.06	2.55	2.98	3.65	4.91	6.33	7.41	8.76	11.81
ENTER DATA BELOW																				
U. Bckgrnd	1	01	03-31-1999	11:57:35	01:00	1	0	0	0	0	0	0	0	0	0	0	0	0	0	0
Upstream	1	01	03-31-1999	12:08:55	01:00	10010	14780	4753	8365	12640	7589	10200	9619	2261	4836	2928	966	157	220	128
Upstream	1	01	03-31-1999	12:11:25	01:00	10290	14770	4751	8439	12590	7661	10440	9551	2342	4879	2875	936	162	227	152
Upstream	1	01	03-31-1999	12:13:55	01:00	9930	14800	4660	8244	12590	7816	10170	9698	2279	4871	2898	1002	148	228	146
Upstream	1	01	03-31-1999	12:16:25	01:00	10160	15280	4844	8317	12620	7945	10270	9502	2315	4789	2808	954	169	225	137
Upstream	1	01	03-31-1999	12:18:55	01:00	10300	14990	4843	8657	12750	7954	10420	9544	2266	5011	3005	962	149	249	152
Upstream	1	01	03-31-1999	12:21:25	01:00	9488	13960	4485	7907	11850	7131	9683	8834	2070	4524	2766	928	153	232	168
Upstream	1	01	03-31-1999	12:23:55	01:00	9885	14270	4599	8149	12230	7600	9902	9222	2176	4762	2862	915	145	212	143
Upstream	1	01	03-31-1999	12:26:25	01:00	9586	14390	4462	8249	11860	7443	9970	9051	2228	4730	2847	932	181	242	160
Upstream	1	01	03-31-1999	12:28:55	01:00	9642	14040	4407	7988	11700	7333	9723	8903	2050	4607	2768	923	166	219	153
Upstream	1	01	03-31-1999	12:31:25	01:00	9754	14470	4578	8161	12130	7633	9890	9152	2250	4895	2893	965	123	234	179
U. Bckgrnd	1	01	03-31-1999	12:45:40	01:00	1	1	0	0	0	0	0	0	0	0	0	0	0	0	0
ENTER DATA BELOW																				
D. Bckgrnd	2	01	03-31-1999	11:58:50	01:00	0	0	0	0	0	0	0	0	0	0	0	0	0	0	0
Downstream	2	01	03-31-1999	12:10:10	01:00	402	396	90	88	90	24	21	24	4	3	3	1	0	0	0
Downstream	2	01	03-31-1999	12:12:40	01:00	395	367	89	97	63	30	18	9	1	5	1	0	0	0	0
Downstream	2	01	03-31-1999	12:15:10	01:00	363	332	57	88	62	21	26	10	0	5	4	5	0	0	0
Downstream	2	01	03-31-1999	12:17:40	01:00	338	316	54	63	68	26	27	18	6	3	4	2	0	0	0
Downstream	2	01	03-31-1999	12:20:10	01:00	321	324	52	70	48	20	16	6	1	7	3	0	0	0	0
Downstream	2	01	03-31-1999	12:22:40	01:00	309	316	50	81	77	10	14	16	0	2	0	0	0	0	0
Downstream	2	01	03-31-1999	12:25:10	01:00	327	329	65	79	58	15	19	15	1	4	3	0	0	1	0
Downstream	2	01	03-31-1999	12:27:40	01:00	363	335	72	88	76	27	23	7	4	6	2	0	1	0	0
Downstream	2	01	03-31-1999	12:30:10	01:00	389	365	74	89	84	31	22	9	3	3	1	0	0	0	0
Downstream	2	01	03-31-1999	12:32:40	01:00	358	335	72	95	69	18	23	9	4	5	2	0	0	1	0
D. Bckgrnd	2	01	03-31-1999	12:46:55	01:00	0	0	0	0	0	0	0	0	0	0	0	0	0	0	0
Meas. Penetration						0.04	0.02	0.01	0.01	0.01	0.00	0.00	0.00	0.00	0.00	0.00	0.00	0.00	0.00	0.00
P100 correction values						1.01	1.01	1.00	1.02	1.02	1.03	1.01	1.02	1.03	1.04	1.03	0.97	0.99	0.83	0.93
Corrected Penetration						0.04	0.02	0.01	0.01	0.01	0.00	0.00	0.00	0.00	0.00	0.00	0.00	0.00	0.00	0.00
Corrected Efficiency (%)						96	98	99	99	99	100	100	100	100	100	100	100	100	100	100

Data Acceptance Criteria:

Total Challenge Counts for Each Channel:	99045	145750	46382	82476	122960	76105	100668	93076	22237	47904	28650	9483	1553	2288	1518
Data Quality Objective:	> 500	> 500	> 500	> 500	> 500	> 500	> 500	> 500	> 500	> 500	> 500	> 500	> 500	> 500	> 500
Does this meet DQO:	Yes	Yes	Yes	Yes	Yes	Yes	Yes	Yes	Yes	Yes	Yes	Yes	Yes	Yes	Yes
Standard Deviation of Penetration for Each Channel :	0.00	0.00	0.00	0.00	0.00	0.00	0.00	0.00	0.00	0.00	0.00	0.00	0.00	0.00	0.00
Data Quality Objective:	<0.10	<0.10	<0.10	<0.10	<0.10	<0.10	<0.10	<0.10	<0.10	< 0.30	< 0.30	< 0.30	< 0.30	< 0.30	< 0.30
Does this meet DQO:	Yes	Yes	Yes	Yes	Yes	Yes	Yes	Yes	Yes	Yes	Yes	Yes	Yes	Yes	Yes

Maximum observed particle concentration (#/cc): 12.9
Data Quality Objective: max. allowable conc. (#/cc): < 23
Does this meet the DQO: Yes, (applies to all channels)

Test No. 03199907
HEPA
Solid-Phase

Particle Counts per Indicated OPC Channel (1-Minute Samples @ 7.1 L/min)

OPC Channel Number						1	2	3	4	5	6	7	8	9	10	11	12	13	14	15
Min. Diam. (um)						0.45	0.59	0.73	0.80	1.02	1.44	1.86	2.28	2.85	3.13	4.25	5.66	7.07	7.77	9.88
Max. Diam. (um)						0.59	0.73	0.80	1.02	1.44	1.86	2.28	2.85	3.13	4.25	5.66	7.07	7.77	9.88	14.10
Geo. Mean Diam (um)						0.52	0.66	0.77	0.90	1.21	1.64	2.06	2.55	2.98	3.65	4.91	6.33	7.41	8.76	11.81
ENTER DATA BELOW																				
U. Bckgrnd	1	01	03-19-1999	15:11:42	01:00	0	1	1	0	0	0	0	0	0	0	0	0	0	0	0
Upstream	1	01	03-19-1999	15:34:44	01:00	9558	14460	4529	8619	12920	7855	10470	9988	2389	5321	3340	1174	206	321	220
Upstream	1	01	03-19-1999	15:37:14	01:00	9784	14750	4659	8822	12880	8039	10430	10150	2448	5317	3422	1194	229	361	232
Upstream	1	01	03-19-1999	15:39:44	01:00	10100	14900	4827	8789	13110	8021	10580	9856	2371	5123	3179	1093	172	296	197
Upstream	1	01	03-19-1999	15:42:14	01:00	9926	14660	4826	8672	13010	7868	10500	9587	2309	5132	3218	1092	188	290	218
Upstream	1	01	03-19-1999	15:44:44	01:00	9948	14910	4765	8825	12960	8107	10550	9900	2368	5199	3165	1131	187	316	237
Upstream	1	01	03-19-1999	15:47:14	01:00	9782	14550	4628	8573	12630	7937	10340	9606	2306	5071	3154	1040	185	273	231
Upstream	1	01	03-19-1999	15:49:44	01:00	9777	14490	4571	8414	12700	7857	10320	9575	2303	4991	3260	1107	205	306	235
Upstream	1	01	03-19-1999	15:52:14	01:00	9655	14440	4469	8363	12640	7587	10110	9601	2210	5105	3077	1103	171	304	211
Upstream	1	01	03-19-1999	15:54:44	01:00	9846	14680	4671	8496	12920	7871	10060	9577	2335	4940	3279	1100	176	300	202
Upstream	1	01	03-19-1999	15:57:14	01:00	9861	14680	4627	8797	13030	7914	10530	9722	2318	5114	3173	1093	184	318	186
U. Bckgrnd	1	01	03-19-1999	16:06:17	01:00	2	1	0	0	0	0	0	0	0	0	0	0	0	0	0
ENTER DATA BELOW																				
D. Bckgrnd	2	01	03-19-1999	15:12:57	01:00	0	0	0	0	0	0	0	1	0	0	0	0	0	0	0
Downstream	2	01	03-19-1999	15:35:59	01:00	4	7	4	3	4	7	9	6	2	4	1	1	0	2	0
Downstream	2	01	03-19-1999	15:38:29	01:00	9	9	2	2	6	3	7	1	3	4	1	0	0	0	0
Downstream	2	01	03-19-1999	15:40:59	01:00	8	6	1	6	4	9	3	9	1	0	2	0	0	0	0
Downstream	2	01	03-19-1999	15:43:29	01:00	3	3	0	5	11	2	2	5	1	0	2	0	1	0	0
Downstream	2	01	03-19-1999	15:45:59	01:00	9	11	3	10	8	1	7	6	2	1	0	1	0	0	0
Downstream	2	01	03-19-1999	15:48:29	01:00	16	19	9	13	8	5	3	2	0	3	2	0	0	0	0
Downstream	2	01	03-19-1999	15:50:59	01:00	7	5	0	2	7	4	0	1	2	3	2	0	0	0	0
Downstream	2	01	03-19-1999	15:53:29	01:00	3	5	3	5	8	3	4	4	0	1	3	0	0	0	0
Downstream	2	01	03-19-1999	15:55:59	01:00	2	7	2	6	6	9	5	4	1	0	0	0	0	1	0
Downstream	2	01	03-19-1999	15:58:29	01:00	6	6	2	3	2	4	4	2	0	2	3	0	0	0	1
D. Bckgrnd	2	01	03-19-1999	16:07:32	01:00	3	5	0	0	1	3	0	0	0	0	0	1	0	0	1
Meas. Penetration						0.00	0.00	0.00	0.00	0.00	0.00	0.00	0.00	0.00	0.00	0.00	0.00	0.00	0.00	0.00
P100 correction values						1.01	1.00	0.98	0.99	1.00	1.00	0.99	1.01	1.03	1.03	1.03	1.04	0.94	1.00	0.97
Corrected Penetration						0.00	0.00	0.00	0.00	0.00	0.00	0.00	0.00	0.00	0.00	0.00	0.00	0.00	0.00	0.00
Corrected Efficiency (%)						100	100	100	100	100	100	100	100	100	100	100	100	100	100	100
Data Acceptance Criteria:																				
Total Challenge Counts for Each Channel:						98237	146520	46572	86370	128800	79056	103890	97562	23357	51313	32267	11127	1903	3085	2169
Data Quality Objective:						> 500	> 500	> 500	> 500	> 500	> 500	> 500	> 500	> 500	> 500	> 500	> 500	> 500	> 500	> 500
Does this meet DQO:						Yes	Yes	Yes	Yes	Yes	Yes	Yes	Yes	Yes	Yes	Yes	Yes	Yes	Yes	Yes
Standard Deviation of Penetration for Each Channel :						0.00	0.00	0.00	0.00	0.00	0.00	0.00	0.00	0.00	0.00	0.00	0.00	0.00	0.00	-0.01
Data Quality Objective:						<0.10	<0.10	<0.10	<0.10	<0.10	<0.10	<0.10	<0.10	<0.10	< 0.30	< 0.30	< 0.30	< 0.30	< 0.30	< 0.30
Does this meet DQO:						Yes	Yes	Yes	Yes	Yes	Yes	Yes	Yes	Yes	Yes	Yes	Yes	Yes	Yes	Yes
Maximum observed particle concentration (#/cc):						13.1														
Data Quality Objective: max. allowable conc. (#/cc):						< 23														
Does this meet the DQO:						Yes, (applies to all channels)														

Test No. 03309903
No Filter
Liquid-Phase

Particle Counts per Indicated OPC Channel (1-Minute Samples @ 7.1 L/min)

OPC Channel Number						1	2	3	4	5	6	7	8	9	10	11	12	13	14	15
Min. Diam. (um)						0.28	0.37	0.47	0.52	0.66	0.94	1.22	1.51	1.88	2.07	2.83	3.77	4.71	5.18	6.60
Max. Diam. (um)						0.37	0.47	0.52	0.66	0.94	1.22	1.51	1.88	2.07	2.83	3.77	4.71	5.18	6.60	9.43
Geo. Mean Diam (um)						0.32	0.42	0.49	0.58	0.78	1.07	1.36	1.68	1.97	2.42	3.26	4.21	4.94	5.85	7.89
ENTER DATA BELOW																				
U. Bckgrnd	1	01	03-30-1999	11:47:44	01:00	0	0	0	0	0	0	1	0	0	0	0	0	0	0	0
Upstream	1	01	03-30-1999	11:58:04	01:00	10110	15710	5711	10230	15570	11220	19210	14300	2950	7188	4131	1138	174	253	128
Upstream	1	01	03-30-1999	12:00:34	01:00	10060	15860	5655	10530	15520	11300	19290	13830	2896	7158	4183	1134	181	251	141
Upstream	1	01	03-30-1999	12:03:04	01:00	10540	16110	5800	10610	15680	11460	19190	14260	2881	7179	4213	1086	149	269	165
Upstream	1	01	03-30-1999	12:05:34	01:00	10000	15330	5494	10000	14890	10900	18530	13180	2707	6880	4029	1032	158	242	145
Upstream	1	01	03-30-1999	12:08:04	01:00	10430	16180	5760	10620	15670	11270	19180	13880	2966	7060	4315	1135	192	244	148
Upstream	1	01	03-30-1999	12:10:34	01:00	10460	16010	5741	10560	15540	11400	19180	13660	2959	7058	4245	1111	163	251	157
Upstream	1	01	03-30-1999	12:13:04	01:00	10470	16090	5664	10380	15630	11610	19160	13270	2853	7059	4059	1051	185	211	105
Upstream	1	01	03-30-1999	12:15:34	01:00	10550	16410	5796	10580	15850	11830	19500	13610	2904	6973	4078	1079	171	222	131
Upstream	1	01	03-30-1999	12:18:04	01:00	10470	16080	5882	10670	15880	11690	19180	13500	2898	6990	4008	1093	148	256	135
Upstream	1	01	03-30-1999	12:20:34	01:00	10210	16060	5723	10370	15620	11400	19030	13180	2901	6936	3819	1009	150	240	127
U. Bckgrnd	1	01	03-30-1999	12:35:16	01:00	0	2	0	0	1	1	0	0	0	1	0	0	0	0	0
ENTER DATA BELOW																				
D. Bckgrnd	2	01	03-30-1999	11:48:59	01:00	0	0	0	0	0	0	0	0	0	0	0	0	0	0	0
Downstream	2	01	03-30-1999	11:59:19	01:00	9838	15250	5519	10200	15230	10810	18600	13350	2772	6888	4097	1048	160	232	83
Downstream	2	01	03-30-1999	12:01:49	01:00	10130	15850	5573	10320	15510	11340	19050	13690	2908	7135	4299	1083	167	235	102
Downstream	2	01	03-30-1999	12:04:19	01:00	10000	15640	5502	10380	15190	11030	18690	13540	2863	6951	4137	1059	166	217	94
Downstream	2	01	03-30-1999	12:06:49	01:00	10060	15680	5602	10280	15120	11030	18800	13740	2898	6998	4130	1062	148	185	87
Downstream	2	01	03-30-1999	12:09:19	01:00	10000	15660	5692	10460	15130	11060	18770	13920	2860	6869	4151	1072	146	203	96
Downstream	2	01	03-30-1999	12:11:49	01:00	10560	16170	5754	10820	16090	11450	19610	14520	2978	7308	4342	1082	165	220	121
Downstream	2	01	03-30-1999	12:14:19	01:00	10450	16290	5659	10690	15990	11760	19600	13260	2932	7085	4169	1072	162	204	112
Downstream	2	01	03-30-1999	12:16:49	01:00	10390	16050	5798	10430	15900	11730	19380	13280	2930	7036	4076	1013	157	196	119
Downstream	2	01	03-30-1999	12:19:19	01:00	10170	15840	5911	10350	15350	11440	18940	13010	2814	6869	4098	1057	157	195	90
Downstream	2	01	03-30-1999	12:21:49	01:00	10450	16160	5690	10710	15740	11470	19250	13350	2853	6991	4108	990	149	221	88
D. Bckgrnd	2	01	03-30-1999	12:36:31	01:00	0	0	0	0	0	0	0	0	0	0	0	0	0	0	0
Meas. Penetration						0.99	0.99	0.99	1.00	1.00	0.99	1.00	0.99	1.00	1.00	1.01	0.97	0.94	0.86	0.72
P100 correction values						1.00	1.00	1.00	1.00	1.00	1.00	1.00	1.00	1.00	1.00	1.00	1.00	1.00	1.00	1.00
Corrected Penetration						0.99	0.99	0.99	1.00	1.00	0.99	1.00	0.99	1.00	1.00	1.01	0.97	0.94	0.86	0.72
Corrected Efficiency (%)						1	1	1	0	0	1	0	1	0	0	-1	3	6	14	28

Data Acceptance Criteria:

Total Challenge Counts for Each Channel:	103300	159840	57226	104550	155850	114080	191450	136670	28915	70481	41080	10868	1671	2439	1382
Data Quality Objective:	> 500	> 500	> 500	> 500	> 500	> 500	> 500	> 500	> 500	> 500	> 500	> 500	> 500	> 500	> 500
Does this meet DQO:	Yes	Yes	Yes	Yes	Yes	Yes	Yes	Yes	Yes	Yes	Yes	Yes	Yes	Yes	Yes
Standard Deviation of Penetration for Each Channel :	0.03	0.03	0.03	0.03	0.03	0.04	0.02	0.04	0.03	0.02	0.04	0.05	0.10	0.09	0.13
Data Quality Objective:	<0.10	<0.10	<0.10	<0.10	<0.10	<0.10	<0.10	<0.10	<0.10	< 0.10	< 0.30	< 0.30	< 0.30	< 0.30	< 0.30
Does this meet DQO:	Yes	Yes	Yes	Yes	Yes	Yes	Yes	Yes	Yes	Yes	Yes	Yes	Yes	Yes	Yes

Maximum observed particle concentration (#/cc): 17.1
Data Quality Objective: max. allowable conc. (#/cc): < 23
Does this meet the DQO: Yes, (applies to all channels)

Test No. 03309904
Arrestor
Liquid-Phase

Particle Counts per Indicated OPC Channel (1-Minute Samples @ 7.1 L/min)

OPC Channel Number						1	2	3	4	5	6	7	8	9	10	11	12	13	14	15
Min. Diam. (um)						0.28	0.37	0.47	0.52	0.66	0.94	1.22	1.51	1.88	2.07	2.83	3.77	4.71	5.18	6.60
Max. Diam. (um)						0.37	0.47	0.52	0.66	0.94	1.22	1.51	1.88	2.07	2.83	3.77	4.71	5.18	6.60	9.43
Geo. Mean Diam (um)						0.32	0.42	0.49	0.58	0.78	1.07	1.36	1.68	1.97	2.42	3.26	4.21	4.94	5.85	7.89
ENTER DATA BELOW																				
U. Bckgrnd	1	01	03-30-1999	13:53:40	01:00	0	0	0	0	0	0	0	0	0	0	0	0	0	0	0
Upstream	1	01	03-30-1999	14:02:31	01:00	10240	15910	5501	10400	15890	11260	19430	13980	2949	7148	4274	1140	160	274	139
Upstream	1	01	03-30-1999	14:05:01	01:00	10160	15980	5697	10350	15710	11260	19130	13980	2870	7084	4419	1139	158	278	140
Upstream	1	01	03-30-1999	14:07:31	01:00	10460	15970	5756	10780	15940	11330	19420	14450	3107	7214	4385	1159	169	272	148
Upstream	1	01	03-30-1999	14:10:01	01:00	10580	16330	5703	10560	15850	11430	19390	14240	3082	7253	4320	1246	165	286	165
Upstream	1	01	03-30-1999	14:12:31	01:00	10470	15950	5778	10520	15820	11310	19260	13850	2950	7156	4486	1139	184	284	159
Upstream	1	01	03-30-1999	14:15:01	01:00	10090	15560	5582	10680	15610	10990	19000	14630	3144	7139	4635	1165	181	306	136
Upstream	1	01	03-30-1999	14:17:31	01:00	10210	15370	5567	10500	15490	10690	18720	14680	3105	7267	4621	1245	206	288	167
Upstream	1	01	03-30-1999	14:20:01	01:00	10220	15740	5498	10540	15660	10970	19130	14600	2947	7248	4453	1206	207	296	147
Upstream	1	01	03-30-1999	14:22:31	01:00	10290	15300	5525	10360	15300	10980	18720	14400	2924	7139	4537	1209	192	303	169
Upstream	1	01	03-30-1999	14:25:01	01:00	10520	16080	5737	10720	16060	11350	19660	15210	3153	7481	4638	1294	190	285	197
U. Bckgrnd	1	01	03-30-1999	14:35:05	01:00	0	0	0	0	0	0	0	0	0	0	0	0	0	0	0
ENTER DATA BELOW																				
D. Bckgrnd	2	01	03-30-1999	13:54:55	01:00	4	0	0	2	1	0	3	1	0	0	0	0	0	0	0
Downstream	2	01	03-30-1999	14:03:46	01:00	1329	1730	571	908	848	353	267	57	1	6	1	1	0	0	0
Downstream	2	01	03-30-1999	14:06:16	01:00	1291	1790	546	906	878	358	280	70	5	8	3	0	0	0	0
Downstream	2	01	03-30-1999	14:08:46	01:00	1317	1732	528	857	815	343	289	45	6	8	2	1	0	0	0
Downstream	2	01	03-30-1999	14:11:16	01:00	1289	1735	511	841	844	374	273	66	7	6	2	0	0	0	0
Downstream	2	01	03-30-1999	14:13:46	01:00	1237	1633	519	822	836	333	284	54	4	8	4	0	0	0	0
Downstream	2	01	03-30-1999	14:16:16	01:00	1327	1708	548	968	887	359	284	76	7	7	2	0	0	1	0
Downstream	2	01	03-30-1999	14:18:46	01:00	1270	1727	521	889	828	350	323	82	5	9	0	0	0	0	0
Downstream	2	01	03-30-1999	14:21:16	01:00	1284	1744	536	853	964	365	298	72	3	9	3	1	1	0	0
Downstream	2	01	03-30-1999	14:23:46	01:00	1257	1686	480	879	845	398	290	67	4	8	2	0	0	0	0
Downstream	2	01	03-30-1999	14:26:16	01:00	1300	1730	500	862	891	375	348	77	5	6	3	0	0	0	0
D. Bckgrnd	2	01	03-30-1999	14:36:20	01:00	0	0	0	0	0	0	0	1	0	2	0	0	0	0	0
Meas. Penetration						0.12	0.11	0.09	0.08	0.05	0.03	0.02	0.00	0.00	0.00	0.00	0.00	0.00	0.00	0.00
P100 correction values						0.99	0.99	0.99	1.00	1.00	0.99	1.00	0.99	1.00	1.00	1.01	0.97	0.94	0.86	0.72
Corrected Penetration						0.13	0.11	0.09	0.08	0.06	0.03	0.02	0.00	0.00	0.00	0.00	0.00	0.00	0.00	0.00
Corrected Efficiency (%)						87	89	91	92	94	97	98	100	100	100	100	100	100	100	100

Data Acceptance Criteria:

Total Challenge Counts for Each Channel:	103240	158190	56344	105410	157330	111570	191860	144020	30231	72129	44768	11942	1812	2872	1567
Data Quality Objective:	> 500	> 500	> 500	> 500	> 500	> 500	> 500	> 500	> 500	> 500	> 500	> 500	> 500	> 500	> 500
Does this meet DQO:	Yes	Yes	Yes	Yes	Yes	Yes	Yes	Yes	Yes	Yes	Yes	Yes	Yes	Yes	Yes
Standard Deviation of Penetration for Each Channel :	0.00	0.00	0.00	0.00	0.00	0.00	0.00	0.00	0.00	0.00	0.00	0.00	0.00	0.00	0.00
Data Quality Objective:	<0.10	<0.10	<0.10	<0.10	<0.10	<0.10	<0.10	<0.10	<0.10	< 0.10	< 0.30	< 0.30	< 0.30	< 0.30	< 0.30
Does this meet DQO:	Yes	Yes	Yes	Yes	Yes	Yes	Yes	Yes	Yes	Yes	Yes	Yes	Yes	Yes	Yes

Maximum observed particle concentration (#/cc):	17.3
Data Quality Objective: max. allowable conc. (#/cc):	< 23
Does this meet the DQO:	Yes, (applies to all channels)

Test No. 03309905
No Filter
Liquid-Phase

Particle Counts per Indicated OPC Channel (1-Minute Samples @ 7.1 L/min)

OPC Channel Number						1	2	3	4	5	6	7	8	9	10	11	12	13	14	15
Min. Diam. (um)						0.28	0.37	0.47	0.52	0.66	0.94	1.22	1.51	1.88	2.07	2.83	3.77	4.71	5.18	6.60
Max. Diam. (um)						0.37	0.47	0.52	0.66	0.94	1.22	1.51	1.88	2.07	2.83	3.77	4.71	5.18	6.60	9.43
Geo. Mean Diam (um)						0.32	0.42	0.49	0.58	0.78	1.07	1.36	1.68	1.97	2.42	3.26	4.21	4.94	5.85	7.89
ENTER DATA BELOW																				
U. Bckgrnd	1	01	03-30-1999	14:58:44	01:00	0	2	2	3	2	0	1	1	0	0	0	0	0	0	0
Upstream	1	01	03-30-1999	15:08:07	01:00	10430	15770	5528	10880	15750	11110	19280	15050	3018	7512	4534	1290	186	286	170
Upstream	1	01	03-30-1999	15:10:37	01:00	10230	15600	5657	10750	15850	10940	18990	15020	3026	7254	4647	1219	193	308	174
Upstream	1	01	03-30-1999	15:13:07	01:00	10140	15140	5452	10320	15520	10670	18530	15030	3090	7352	4664	1213	209	285	173
Upstream	1	01	03-30-1999	15:15:37	01:00	9804	15010	5514	10250	15390	10380	18560	15120	3119	7232	4544	1282	198	312	145
Upstream	1	01	03-30-1999	15:18:07	01:00	10070	15150	5440	10150	15220	10920	18420	13670	2976	6820	4178	1178	181	251	131
Upstream	1	01	03-30-1999	15:20:37	01:00	9880	15300	5588	10130	15090	10920	18810	13550	2763	6809	4147	1097	180	231	149
Upstream	1	01	03-30-1999	15:23:07	01:00	10300	15690	5582	10200	15540	11180	19070	13930	3001	7123	4325	1134	172	293	147
Upstream	1	01	03-30-1999	15:25:37	01:00	10020	15640	5624	10270	15570	11040	18800	13850	2919	7035	4313	1141	160	260	159
Upstream	1	01	03-30-1999	15:28:07	01:00	10450	15980	5726	10730	15860	11340	19210	14180	2956	7338	4423	1129	163	262	177
Upstream	1	01	03-30-1999	15:30:37	01:00	10400	16090	5940	10720	15770	11300	19440	14190	3093	7291	4393	1172	176	247	140
U. Bckgrnd	1	01	03-30-1999	15:46:10	01:00	0	0	0	0	0	0	0	0	0	0	0	0	0	0	0
ENTER DATA BELOW																				
D. Bckgrnd	2	01	03-30-1999	14:59:59	01:00	2	0	0	0	0	0	0	0	0	0	0	0	0	0	0
Downstream	2	01	03-30-1999	15:09:22	01:00	10240	15440	5712	10620	16020	10900	18800	14890	3103	7503	4669	1249	163	313	133
Downstream	2	01	03-30-1999	15:11:52	01:00	9997	15250	5346	10240	15380	10750	18760	14470	3108	7267	4477	1150	186	259	130
Downstream	2	01	03-30-1999	15:14:22	01:00	9874	15150	5412	10400	15670	10620	18610	15190	3001	7413	4719	1295	188	243	143
Downstream	2	01	03-30-1999	15:16:52	01:00	10060	15220	5432	10170	15580	10470	18700	14920	3127	7219	4734	1264	189	262	137
Downstream	2	01	03-30-1999	15:19:22	01:00	10170	15640	5534	10220	15390	11130	18990	13740	2915	7078	4340	1163	178	262	101
Downstream	2	01	03-30-1999	15:21:52	01:00	9949	15210	5455	10270	15190	10830	18610	13440	2895	6919	4339	1139	159	233	115
Downstream	2	01	03-30-1999	15:24:22	01:00	9875	15640	5542	10510	15530	11120	18920	13810	2906	7064	4341	1096	145	247	101
Downstream	2	01	03-30-1999	15:26:52	01:00	10020	15180	5427	10300	15320	10890	18530	13830	3030	7172	4477	1086	176	233	116
Downstream	2	01	03-30-1999	15:29:22	01:00	10110	15530	5672	10550	15560	11250	19190	13890	2930	7324	4291	1144	165	225	125
Downstream	2	01	03-30-1999	15:31:52	01:00	9859	15200	5385	10170	15130	10950	18580	13600	2913	6916	4354	1130	148	274	102
D. Bckgrnd	2	01	03-30-1999	15:47:25	01:00	0	1	0	0	0	0	0	0	0	0	0	0	0	0	0
Meas. Penetration						0.98	0.99	0.98	0.99	0.99	0.99	0.99	0.99	1.00	1.00	1.01	0.99	0.93	0.93	0.77
P100 correction values						1.00	1.00	1.00	1.00	1.00	1.00	1.00	1.00	1.00	1.00	1.00	1.00	1.00	1.00	1.00
Corrected Penetration						0.98	0.99	0.98	0.99	0.99	0.99	0.99	0.99	1.00	1.00	1.01	0.99	0.93	0.93	0.77
Corrected Efficiency (%)						2	1	2	1	1	1	1	1	0	0	-1	1	7	7	23
Data Acceptance Criteria:																				
Total Challenge Counts for Each Channel:						101724	155370	56051	104400	155560	109800	189110	143590	29961	71766	44168	11855	1818	2735	1565
Data Quality Objective:						> 500	> 500	> 500	> 500	> 500	> 500	> 500	> 500	> 500	> 500	> 500	> 500	> 500	> 500	> 500
Does this meet DQO:						Yes	Yes	Yes	Yes	Yes	Yes	Yes	Yes	Yes	Yes	Yes	Yes	Yes	Yes	Yes
Standard Deviation of Penetration for Each Channel :						0.03	0.03	0.03	0.03	0.02	0.03	0.02	0.06	0.05	0.04	0.06	0.08	0.12	0.13	0.13
Data Quality Objective:						<0.10	<0.10	<0.10	<0.10	<0.10	<0.10	<0.10	<0.10	<0.10	< 0.10	< 0.30	< 0.30	< 0.30	< 0.30	< 0.30
Does this meet DQO:						Yes	Yes	Yes	Yes	Yes	Yes	Yes	Yes	Yes	Yes	Yes	Yes	Yes	Yes	Yes
Maximum observed particle concentration (#/cc):						17.1														
Data Quality Objective: max. allowable conc. (#/cc):						< 23														
Does this meet the DQO:						Yes, (applies to all channels)														

Test No. 03309906
Arrestor
Liquid-Phase

Particle Counts per Indicated OPC Channel (1-Minute Samples @ 7.1 L/min)

OPC Channel Number						1	2	3	4	5	6	7	8	9	10	11	12	13	14	15
Min. Diam. (um)						0.28	0.37	0.47	0.52	0.66	0.94	1.22	1.51	1.88	2.07	2.83	3.77	4.71	5.18	6.60
Max. Diam. (um)						0.37	0.47	0.52	0.66	0.94	1.22	1.51	1.88	2.07	2.83	3.77	4.71	5.18	6.60	9.43
Geo. Mean Diam (um)						0.32	0.42	0.49	0.58	0.78	1.07	1.36	1.68	1.97	2.42	3.26	4.21	4.94	5.85	7.89
ENTER DATA BELOW																				
U. Bckgrnd	1	01	03-30-1999	16:29:04	01:00	2	1	0	0	0	0	0	0	0	0	0	0	0	0	0
Upstream	1	01	03-30-1999	16:41:49	01:00	10590	16090	5863	10800	15540	11590	19800	13940	2983	7269	4210	1128	181	272	148
Upstream	1	01	03-30-1999	16:44:19	01:00	10640	16220	5825	10600	16080	11610	19510	14310	2987	7165	4418	1126	193	304	164
Upstream	1	01	03-30-1999	16:46:49	01:00	10520	16040	5765	10780	16030	11720	19640	14030	2786	7219	4383	1113	187	289	183
Upstream	1	01	03-30-1999	16:49:19	01:00	10350	16290	5501	10590	15740	11390	19380	13760	2964	7011	4287	1161	164	268	138
Upstream	1	01	03-30-1999	16:51:49	01:00	10580	16540	5853	10720	15860	11620	19770	13910	2993	7264	4274	1181	176	275	160
Upstream	1	01	03-30-1999	16:54:19	01:00	9983	15110	5325	10070	15110	10650	18510	14140	2861	6894	4368	1222	153	260	156
Upstream	1	01	03-30-1999	16:56:49	01:00	10140	15550	5657	10540	15490	10780	18720	14340	3080	7364	4524	1205	218	299	149
Upstream	1	01	03-30-1999	16:59:19	01:00	10340	15990	5713	10900	16090	11340	19490	15070	3002	7344	4770	1267	195	312	163
Upstream	1	01	03-30-1999	17:01:49	01:00	10540	16290	5778	11060	16540	11620	19580	15400	3141	7710	4760	1334	207	317	182
Upstream	1	01	03-30-1999	17:04:19	01:00	10340	16150	5720	10980	15940	11360	19730	15070	3112	7517	4699	1227	192	318	181
U. Bckgrnd	1	01	03-30-1999	17:12:41	01:00	0	0	0	0	0	0	0	0	0	0	0	0	0	0	0
ENTER DATA BELOW																				
D. Bckgrnd	2	01	03-30-1999	16:27:49	01:00	1	0	0	1	1	0	0	0	0	0	0	0	0	0	0
Downstream	2	01	03-30-1999	16:43:04	01:00	1131	1352	458	691	616	273	228	56	6	6	2	0	1	1	0
Downstream	2	01	03-30-1999	16:45:34	01:00	1049	1431	429	622	631	263	182	45	5	5	2	1	0	0	0
Downstream	2	01	03-30-1999	16:48:04	01:00	1126	1475	466	705	644	281	194	39	6	4	3	0	0	0	0
Downstream	2	01	03-30-1999	16:50:34	01:00	1145	1436	428	652	621	265	210	33	6	6	3	0	0	0	0
Downstream	2	01	03-30-1999	16:53:04	01:00	1129	1496	442	677	682	246	198	37	7	10	0	1	0	0	0
Downstream	2	01	03-30-1999	16:55:34	01:00	1112	1421	486	728	687	269	228	54	6	11	1	1	0	0	0
Downstream	2	01	03-30-1999	16:58:04	01:00	1126	1454	462	736	659	267	235	52	5	10	1	1	0	0	0
Downstream	2	01	03-30-1999	17:00:34	01:00	1121	1428	457	722	679	267	256	66	6	9	4	0	0	0	0
Downstream	2	01	03-30-1999	17:03:04	01:00	1036	1400	443	695	709	296	221	80	4	11	2	1	1	0	0
Downstream	2	01	03-30-1999	17:05:34	01:00	1094	1423	432	724	672	255	233	54	3	8	3	0	0	0	0
D. Bckgrnd	2	01	03-30-1999	17:13:56	01:00	1	0	0	0	2	0	0	0	0	0	0	0	0	0	0
Meas. Penetration						0.11	0.09	0.08	0.06	0.04	0.02	0.01	0.00	0.00	0.00	0.00	0.00	0.00	0.00	0.00
P100 correction values						0.98	0.99	0.98	0.99	0.99	0.99	0.99	0.99	1.00	1.00	1.01	0.99	0.93	0.93	0.77
Corrected Penetration						0.11	0.09	0.08	0.07	0.04	0.02	0.01	0.00	0.00	0.00	0.00	0.00	0.00	0.00	0.00
Corrected Efficiency (%)						89	91	92	93	96	98	99	100	100	100	100	100	100	100	100

Data Acceptance Criteria:

Total Challenge Counts for Each Channel:	104023	160270	57000	107040	158420	113680	194130	143970	29909	72757	44693	11964	1866	2914	1624
Data Quality Objective:	> 500	> 500	> 500	> 500	> 500	> 500	> 500	> 500	> 500	> 500	> 500	> 500	> 500	> 500	> 500
Does this meet DQO:	Yes	Yes	Yes	Yes	Yes	Yes	Yes	Yes	Yes	Yes	Yes	Yes	Yes	Yes	Yes
Standard Deviation of Penetration for Each Channel :	0.00	0.00	0.00	0.00	0.00	0.00	0.00	0.00	0.00	0.00	0.00	0.00	0.00	0.00	0.00
Data Quality Objective:	<0.10	<0.10	<0.10	<0.10	<0.10	<0.10	<0.10	<0.10	<0.10	< 0.10	< 0.30	< 0.30	< 0.30	< 0.30	< 0.30
Does this meet DQO:	Yes	Yes	Yes	Yes	Yes	Yes	Yes	Yes	Yes	Yes	Yes	Yes	Yes	Yes	Yes

Maximum observed particle concentration (#/cc): 17.6
Data Quality Objective: max. allowable conc. (#/cc): < 23
Does this meet the DQO: Yes, (applies to all channels)

Test No. 03319901
No Filter
Liquid-Phase

Particle Counts per Indicated OPC Channel (1-Minute Samples @ 7.1 L/min)

OPC Channel Number						1	2	3	4	5	6	7	8	9	10	11	12	13	14	15
Min. Diam. (um)						0.28	0.37	0.47	0.52	0.66	0.94	1.22	1.51	1.88	2.07	2.83	3.77	4.71	5.18	6.60
Max. Diam. (um)						0.37	0.47	0.52	0.66	0.94	1.22	1.51	1.88	2.07	2.83	3.77	4.71	5.18	6.60	9.43
Geo. Mean Diam (um)						0.32	0.42	0.49	0.58	0.78	1.07	1.36	1.68	1.97	2.42	3.26	4.21	4.94	5.85	7.89
ENTER DATA BELOW																				
U. Bckgrnd	1	01	03-31-1999	09:17:43	01:00	0	0	0	0	0	0	0	0	0	0	0	0	0	0	0
Upstream	1	01	03-31-1999	09:26:44	01:00	10710	16810	6101	11070	16470	12010	20100	14840	2860	6927	4112	1107	188	303	187
Upstream	1	01	03-31-1999	09:29:14	01:00	10770	16490	5805	10830	16210	11580	19730	14720	3034	6710	3936	1089	165	279	156
Upstream	1	01	03-31-1999	09:31:44	01:00	10340	16360	6026	10880	15830	11520	19480	14740	2972	6772	4119	1171	176	298	149
Upstream	1	01	03-31-1999	09:34:14	01:00	10480	16360	5860	10940	16260	11590	19680	14860	2974	6815	4059	1204	173	266	146
Upstream	1	01	03-31-1999	09:36:44	01:00	10730	16710	5945	10940	16420	11760	19790	14700	2820	6964	3946	1140	177	281	155
Upstream	1	01	03-31-1999	09:39:14	01:00	10650	16580	6076	10840	16140	11630	19940	14380	2962	6717	4012	1170	169	280	157
Upstream	1	01	03-31-1999	09:41:44	01:00	10730	16820	6033	11130	16690	11840	20270	14430	2971	6875	3879	1054	174	260	164
Upstream	1	01	03-31-1999	09:44:14	01:00	11020	16960	6127	11360	16700	12200	20530	14840	2987	6781	3941	1112	208	250	141
Upstream	1	01	03-31-1999	09:46:44	01:00	11100	17120	6033	11170	16460	11980	20080	14870	2969	6852	4033	1183	192	244	157
Upstream	1	01	03-31-1999	09:49:14	01:00	10980	17090	6213	11310	16860	12120	20490	15440	3083	7099	4251	1163	220	305	151
U. Bckgrnd	1	01	03-31-1999	09:59:45	01:00	0	0	0	0	0	0	0	0	0	0	0	0	0	0	0
ENTER DATA BELOW																				
D. Bckgrnd	2	01	03-31-1999	09:18:58	01:00	3	0	1	0	2	0	0	1	0	0	0	0	0	3	0
Downstream	2	01	03-31-1999	09:27:59	01:00	10550	16680	5907	10740	16200	11790	19650	14800	2957	6733	4104	1124	156	294	169
Downstream	2	01	03-31-1999	09:30:29	01:00	10380	16330	5909	11020	16000	11590	19800	14950	2931	6868	4086	1119	180	291	146
Downstream	2	01	03-31-1999	09:32:59	01:00	10270	15890	5708	10850	15710	11470	19350	14800	2792	6750	3966	1079	180	302	170
Downstream	2	01	03-31-1999	09:35:29	01:00	10810	16600	6027	11130	16400	11990	20090	15320	3065	6905	4083	1194	200	321	176
Downstream	2	01	03-31-1999	09:37:59	01:00	10860	16640	6089	10920	16230	11950	20130	15070	2870	6945	4036	1226	176	253	157
Downstream	2	01	03-31-1999	09:40:29	01:00	10850	16830	6062	11070	16440	12150	20220	14820	2923	6841	3979	1130	187	284	174
Downstream	2	01	03-31-1999	09:42:59	01:00	10690	16880	6093	11050	16540	12060	20090	14920	2939	6970	3950	1134	163	288	158
Downstream	2	01	03-31-1999	09:45:29	01:00	10970	17110	6075	11290	16630	12100	20410	14760	2962	7054	4093	1090	189	276	156
Downstream	2	01	03-31-1999	09:47:59	01:00	11070	16760	6043	11350	16670	12290	20510	15630	3058	7184	4393	1161	189	321	185
Downstream	2	01	03-31-1999	09:50:29	01:00	10740	17000	6073	11220	16790	12080	20850	15860	3055	7176	4166	1196	197	301	172
D. Bckgrnd	2	01	03-31-1999	10:01:00	01:00	0	0	0	0	0	0	0	0	0	0	0	0	0	0	0
Meas. Penetration						1.00	1.00	1.00	1.00	1.00	1.01	1.01	1.02	1.00	1.01	1.01	1.01	0.99	1.05	1.06
P100 correction values						1.00	1.00	1.00	1.00	1.00	1.00	1.00	1.00	1.00	1.00	1.00	1.00	1.00	1.00	1.00
Corrected Penetration						1.00	1.00	1.00	1.00	1.00	1.01	1.01	1.02	1.00	1.01	1.01	1.01	0.99	1.05	1.06
Corrected Efficiency (%)						0	0	0	0	0	-1	-1	-2	0	-1	-1	-1	1	-5	-6
Data Acceptance Criteria:																				
Total Challenge Counts for Each Channel:						107510	167300	60219	110470	164040	118230	200090	147820	29632	68512	40288	11393	1842	2766	1563
Data Quality Objective:						> 500	> 500	> 500	> 500	> 500	> 500	> 500	> 500	> 500	> 500	> 500	> 500	> 500	> 500	> 500
Does this meet DQO:						Yes	Yes	Yes	Yes	Yes	Yes	Yes	Yes	Yes	Yes	Yes	Yes	Yes	Yes	Yes
Standard Deviation of Penetration for Each Channel :						0.03	0.03	0.03	0.02	0.03	0.03	0.03	0.03	0.04	0.03	0.04	0.06	0.12	0.11	0.11
Data Quality Objective:						<0.10	<0.10	<0.10	<0.10	<0.10	<0.10	<0.10	<0.10	<0.10	< 0.10	< 0.30	< 0.30	< 0.30	< 0.30	< 0.30
Does this meet DQO:						Yes	Yes	Yes	Yes	Yes	Yes	Yes	Yes	Yes	Yes	Yes	Yes	Yes	Yes	Yes
Maximum observed particle concentration (#/cc):						17.9														
Data Quality Objective: max. allowable conc. (#/cc):						< 23														
Does this meet the DQO:						Yes, (applies to all channels)														

Test No. 03319902
Arrestor
Liquid-Phase

Particle Counts per Indicated OPC Channel (1-Minute Samples @ 7.1 L/min)

OPC Channel Number						1	2	3	4	5	6	7	8	9	10	11	12	13	14	15
Min. Diam. (um)						0.28	0.37	0.47	0.52	0.66	0.94	1.22	1.51	1.88	2.07	2.83	3.77	4.71	5.18	6.60
Max. Diam. (um)						0.37	0.47	0.52	0.66	0.94	1.22	1.51	1.88	2.07	2.83	3.77	4.71	5.18	6.60	9.43
Geo. Mean Diam (um)						0.32	0.42	0.49	0.58	0.78	1.07	1.36	1.68	1.97	2.42	3.26	4.21	4.94	5.85	7.89
ENTER DATA BELOW																				
U. Bckgrnd	1	01	03-31-1999	10:30:34	01:00	0	0	0	0	0	0	0	0	0	0	0	0	0	0	0
Upstream	1	01	03-31-1999	10:40:48	01:00	10670	16440	5913	11200	16610	11640	19750	15670	3082	6924	4302	1191	198	297	166
Upstream	1	01	03-31-1999	10:43:18	01:00	10830	16350	6013	11110	16740	11570	19950	16020	3024	7186	4419	1263	204	315	164
Upstream	1	01	03-31-1999	10:45:48	01:00	10500	16220	5679	11170	16370	11170	19500	15990	3134	6928	4436	1294	193	308	176
Upstream	1	01	03-31-1999	10:48:18	01:00	10720	16080	5832	10970	16070	11050	19420	15970	3025	6893	4388	1229	186	281	145
Upstream	1	01	03-31-1999	10:50:48	01:00	10180	15760	5665	10820	15930	11140	18860	15470	3037	6800	4304	1115	185	318	171
Upstream	1	01	03-31-1999	10:53:18	01:00	10220	15780	5664	10560	15530	11320	18890	14070	2711	6372	3846	1019	181	259	151
Upstream	1	01	03-31-1999	10:55:48	01:00	10730	16570	6006	11040	16450	11860	19880	14760	2837	6748	3938	1054	181	276	176
Upstream	1	01	03-31-1999	10:58:18	01:00	10700	16490	5933	11090	16350	11670	19860	15060	2859	6950	4101	1173	168	270	141
Upstream	1	01	03-31-1999	11:00:48	01:00	10670	16590	6094	11000	16300	11760	20040	14890	2834	6847	3974	1133	169	279	157
Upstream	1	01	03-31-1999	11:03:18	01:00	10760	16800	6111	11010	16710	11810	19800	14970	2968	6765	3977	1064	185	253	148
U. Bckgrnd	1	01	03-31-1999	11:17:35	01:00	0	0	0	0	0	0	0	0	0	0	0	0	0	0	0
ENTER DATA BELOW																				
D. Bckgrnd	2	01	03-31-1999	10:31:49	01:00	0	0	0	0	0	0	0	0	0	1	0	0	0	0	0
Downstream	2	01	03-31-1999	10:42:03	01:00	1202	1589	454	835	760	330	263	65	10	10	3	0	0	0	0
Downstream	2	01	03-31-1999	10:44:33	01:00	1246	1636	459	796	836	301	257	56	3	10	4	0	0	0	1
Downstream	2	01	03-31-1999	10:47:03	01:00	1230	1569	470	785	765	303	245	59	0	8	7	1	0	0	0
Downstream	2	01	03-31-1999	10:49:33	01:00	1165	1496	487	772	717	301	233	61	6	3	3	0	0	0	0
Downstream	2	01	03-31-1999	10:52:03	01:00	1182	1522	454	791	742	285	258	72	8	7	6	1	0	0	0
Downstream	2	01	03-31-1999	10:54:33	01:00	1112	1600	462	744	667	302	224	52	4	8	5	0	0	0	0
Downstream	2	01	03-31-1999	10:57:03	01:00	1162	1534	434	664	618	249	218	56	7	13	5	0	0	0	0
Downstream	2	01	03-31-1999	10:59:33	01:00	1127	1416	461	667	638	262	195	34	3	9	4	1	0	0	0
Downstream	2	01	03-31-1999	11:02:03	01:00	1048	1498	452	743	630	271	198	39	3	2	3	1	0	0	0
Downstream	2	01	03-31-1999	11:04:33	01:00	1070	1501	472	673	692	253	194	40	4	11	0	1	0	0	0
D. Bckgrnd	2	01	03-31-1999	11:18:50	01:00	0	0	0	0	0	0	0	0	0	0	0	0	0	0	0
Meas. Penetration						0.11	0.09	0.08	0.07	0.04	0.02	0.01	0.00	0.00	0.00	0.00	0.00	0.00	0.00	0.00
P100 correction values						1.00	1.00	1.00	1.00	1.00	1.01	1.01	1.02	1.00	1.01	1.01	1.01	0.99	1.05	1.06
Corrected Penetration						0.11	0.09	0.08	0.07	0.04	0.02	0.01	0.00	0.00	0.00	0.00	0.00	0.00	0.00	0.00
Corrected Efficiency (%)						89	91	92	93	96	98	99	100	100	100	100	100	100	100	100

Data Acceptance Criteria:

Total Challenge Counts for Each Channel:	105980	163080	58910	109970	163060	114990	195950	152870	29511	68413	41685	11535	1850	2856	1595
Data Quality Objective:	> 500	> 500	> 500	> 500	> 500	> 500	> 500	> 500	> 500	> 500	> 500	> 500	> 500	> 500	> 500
Does this meet DQO:	Yes	Yes	Yes	Yes	Yes	Yes	Yes	Yes	Yes	Yes	Yes	Yes	Yes	Yes	Yes
Standard Deviation of Penetration for Each Channel :	0.01	0.00	0.00	0.01	0.00	0.00	0.00	0.00	0.00	0.00	0.00	0.00	0.00	0.00	0.00
Data Quality Objective:	<0.10	<0.10	<0.10	<0.10	<0.10	<0.10	<0.10	<0.10	<0.10	< 0.10	< 0.30	< 0.30	< 0.30	< 0.30	< 0.30
Does this meet DQO:	Yes	Yes	Yes	Yes	Yes	Yes	Yes	Yes	Yes	Yes	Yes	Yes	Yes	Yes	Yes

Maximum observed particle concentration (#/cc): 17.7
Data Quality Objective: max. allowable conc. (#/cc): < 23
Does this meet the DQO: Yes, (applies to all channels)