VR-P2MF-01-03
Revision 0
January 18, 2002

Environmental Technology Verification Report

Evaluation of Hydrometrics, Inc., High Efficiency Reverse Osmosis (HEROÔ) Industrial Wastewater Treatment System

Prepared by

CTC Concurrent Technologies Corporation

Under a Cooperative Agreement with

EPA **U.S. Environmental Protection Agency**

ETV ETV ETV

NOTICE

This publication was developed under Cooperative Agreement No. CR826492-01-0 awarded by the U.S. Environmental Protection Agency (EPA). EPA reviewed this document and made comments and suggestions intended to improve the scientific analysis and technical accuracy of the statements contained in the document. Concurrent Technologies Corporation (*CTC*) accommodated EPA's comments and suggestions. However, the views expressed in this document are those of *CTC;* EPA does not endorse any products or commercial services mentioned in this publication. The document will be maintained by *CTC* in accordance with the Environmental Technology Verification Program Metal Finishing Pollution Prevention (P2) Technologies Quality Management Plan. Document control elements include unique issue numbers, document identification, numbered pages, document distribution records, tracking of revisions, a document MASTER filing and retrieval system, and a document archiving system.

Environmental Technology Verification Report

Evaluation of Hydrometrics, Inc., High Efficiency Reverse Osmosis (HEROÔ) Industrial Wastewater Treatment System

Prepared by

ETV-MF Project Manager
Chris Start
Michigan Manufacturing Technology Center
Plymouth, MI 48170

***CTC* Project Manager**
Scott Maurer
Concurrent Technologies Corporation
Largo, FL 33773

***CTC* ETV-MF Program Manager**
Donn Brown
Concurrent Technologies Corporation
Largo, FL 33773

EPA ETV Center Manager
George Moore, Ph.D.
National Risk Management Research Laboratory
Cincinnati, Ohio 45628

FOREWORD

The Environmental Technology Verification (ETV) Program has been established by the EPA to evaluate the performance characteristics of innovative environmental technologies for any media and to report this objective information to the states, local governments, buyers, and users of environmental technology. EPA's Office of Research and Development (ORD) established a five-year pilot program to evaluate alternative operating parameters and to determine the overall feasibility of a technology verification program. ETV began in October 1995 and was evaluated through September 2000, at which time EPA prepared a report to Congress containing results of the pilot program and recommendations for its future operation.

EPA's ETV Program, through the National Risk Management Research Laboratory (NRMRL), has partnered with *CTC* under the Environmental Technology Verification Program Metal Finishing P2 Technologies (ETV-MF) Center. The ETV-MF Center, in association with EPA's Metal Finishing Strategic Goals Program, was initiated to identify promising and innovative metal finishing pollution prevention technologies through EPA-supported performance verifications. The following report describes the verification of the performance of the Hydrometrics, Inc., High Efficiency Reverse Osmosis (HERO™) Industrial Wastewater Treatment System.

ACRONYM and ABBREVIATION LIST

amp	Ampere(s)
C	Specific Conductivity
^{o}C	Degrees Celsius
cm	Centimeter
COC	Chain of Custody
CTC	Concurrent Technologies Corporation
CWA	Clean Water Act
DOE	U.S. Department of Energy
EFF	Effluent
EPA	U.S. Environmental Protection Agency
ETV-MF	Environmental Technology Verification Program for Metal Finishing P2 Technologies
FM&T	Federal Manufacturing & Technology
ft^2	Square Feet
gal	Gallon(s)
gfd	Gallons of Permeate Produced per Square Foot of Membrane per Day
gpd	Gallons per Day
gpm	Gallons per Minute
HCl	Hydrochloric Acid
HERO™	High Efficiency Reverse Osmosis
HP	Horsepower
hr(s)	Hour(s)
Hz	hertz
IC	Ion Chromatography
ICP-AES	Inductively Coupled Plasma – Atomic Emission Spectroscopy
IDL	Instrument Detection Limit
IN	Influent
IWPF	Industrial Wastewater Pre-Treatment Facility
KCP	Kansas City Plant
kWh	Kilowatt-Hour
L	Liter
lb	Pound
MBS	Metabisulfite
MDL	Method Detection Limit
mg	Milligram
mg/L	Milligram per Liter
min	Minute
mL	Milliliter
MP&M	Metal Products & Machinery
MRL	Method Reporting Limit
µg	Microgram
µS	Micro-siemens
NA	Not Applicable
NaOH	Sodium Hydroxide

ACRONYM and ABBREVIATION LIST (continued)

ND	Not Detected
NRMRL	National Risk Management Research Laboratory
O&G	Oils and Grease
O&M	Operating and Maintenance
ORD	Office of Research & Development
P	Percent Recovery
POTW	Publicly Owned Treatment Works
PVD	Physical Vapor Deposition
QA/QC	Quality Assurance/Quality Control
QMP	Quality Management Plan
RO	Reverse Osmosis
RPD	Relative Percent Difference
SAC	Strong Acid Cation
SP-	Sampling Point
SR	Sample Result
SSR	Spiked Sample Result
TDS	Total Dissolved Solids
TOC	Total Organic Carbon
TSA	Technical System Audit
TSS	Total Suspended Solids
U.S.	United States
VOC	Volatile Organic Carbon
WAC	Weak Acid Cation

ACKNOWLEDGEMENTS

This is to acknowledge Valerie Whitman of *CTC* for her help in preparing this document. *CTC* also acknowledges the support of all those who helped plan and implement the verification activities and prepare this report. In particular, a special thanks to Alva Daniels, EPA National Risk Management Research Laboratory (NRMRL) Assistant Director, and Lauren Drees, EPA Quality Assurance Manager. *CTC* also expresses sincere gratitude to Hydrometrics, Inc., the manufacturer of the High Efficiency Reverse Osmosis (HERO™) Industrial Wastewater Treatment System, for their participation in and support of this program, and their ongoing commitment to improve metal finishing operations. In particular, *CTC* thanks Steve Ackerlund and Mark Reinsel for their assistance. *CTC* also thanks Honeywell Federal Manufacturing & Technology's (FM&T's) Kansas City Plant (KCP) of Kansas City, Missouri, for the use of their facilities and materials, and the contributions of Mike Stites and Bob Hughes for their cooperation during this verification test.

THE ENVIRONMENTAL TECHNOLOGY VERIFICATION PROGRAM

U.S. Environmental Protection Agency

Concurrent Technologies Corporation

ETV VERIFICATION STATEMENT

TECHNOLOGY TYPE:	**REVERSE OSMOSIS**		
APPLICATION:	**INDUSTRIAL WASTEWATER TREATMENT**		
TECHNOLOGY NAME:	**High Efficiency Reverse Osmosis (HEROÔ)**		
COMPANY:	**Hydrometrics, Inc.**		
POC:	**W. Steve Ackerlund**		
ADDRESS:	**2727 Airport Rd.** **Helena, MT 59601**	**PHONE:** **FAX:**	**(406) 443-4150** **(406) 443-4155**
E-MAIL:	**sackerlund@hydrometrics.com**		

The United States Environmental Protection Agency (EPA) has created the Environmental Technology Verification (ETV) Program to facilitate the deployment of innovative or improved environmental technologies through performance verification and dissemination of information. The goal of the ETV Program is to further environmental protection by substantially accelerating the acceptance and use of improved, cost-effective technologies. ETV seeks to achieve this goal by providing high-quality, peer-reviewed data on technology performance to those involved in the design, distribution, financing, permitting, purchase, and use of environmental technologies.

ETV works in partnership with recognized standards and testing organizations, and stakeholder groups consisting of buyers, vendor organizations, and states, with the full participation of individual technology developers. The program evaluates the performance of innovative technologies by developing test plans that are responsive to the needs of stakeholders, conducting field or laboratory tests (as appropriate), collecting and analyzing data, and preparing peer-reviewed reports. All evaluations are conducted in accordance with rigorous quality assurance protocols to ensure that data of known and adequate quality are generated and that the results are defensible.

The ETV Metal Finishing P2 Technologies (ETV-MF) Program, one of 12 technology focus areas under the ETV Program, is operated by Concurrent Technologies Corporation, in cooperation with EPA's National Risk Management Research Laboratory. The ETV-MF Program has evaluated the performance of a reverse osmosis (RO) technology for the treatment of industrial wastewater. This verification statement provides a summary of the test results for the Hydrometrics, Inc., High Efficiency Reverse Osmosis (HERO™) Industrial Wastewater Treatment System.

VERIFICATION TEST DESCRIPTION

The Hydrometrics, Inc., HERO™ system was tested, under actual production conditions, on combined industrial wastewater at Honeywell Federal Manufacturing & Technology's (FM&T's) Kansas City Plant (KCP) in Kansas City, Missouri. A mobile pilot-scale HERO™ system was installed at the KCP, after their conventional wastewater treatment system, in order to evaluate the system's ability to treat and recycle the KCP's combined, post-treated wastewater for reuse within the facility. While beyond the scope of this verification test, the equipment vendor claims the HERO™ system may also be used to treat dilute rinse waters directly (pre-treatment), and more concentrated wastes after appropriate conditioning (post-treatment).

Testing was conducted on two separate processes over a four-day period:

- A large portion (46 percent) of the combined KCP wastewater is dilute, non-production wastewater. The remaining 54 percent of the KCP's spent process water consists of non-metal-finishing industrial process wastewaters, and rinse waters from metal finishing. The HERO™ system was evaluated on its ability to separate chemical contaminants from the post-conventionally-treated wastewater and condition it for reuse within the facility.

- A very small amount of the KCP's wastewater, about 330 gallons per day (gpd), is cyanide-bearing rinse water from the KCP metal finishing shop's copper plating operations. Copper is a potential recyclable/salable metal. This verification test included a separate weak acid cation (WAC) ion exchange unit installed between the pre-conventional treatment cyanide rinse water storage tank and the first step of the cyanide oxidation process. This smaller-scale WAC unit used resin identical to the WAC unit within the HERO™ system where metals recovery normally takes place. Due to the KCP's conventional wastewater treatment system, this separate WAC unit was installed upstream in order to recover the copper. The verification on this WAC unit demonstrated the HERO™ system's ability to remove valuable metals for recovery, recycle and/or sale.

Historical operating and maintenance labor requirements, chemical usage, and waste generation data were collected to perform the cost analysis.

TECHNOLOGY DESCRIPTION

The patented three-step HERO™ process combines "off-the-shelf" equipment to convert wastewater into reusable water. In the first step of the HERO™ process, ion exchange removes ions that form scale (water softening). Removing the hardness from the wastewater results in a concentrated brine waste. The second step is membrane degasification, which removes the buffering effect from carbon dioxide to lower caustic demands in the final step of the process. Carbon dioxide is the only byproduct of the second step, where the wastewater alkalinity is removed. The final step in the HERO™ process is RO. Addition of NaOH to the wastewater raises the pH to the proper operating level before entering the final stage of treatment. The high pH of the wastewater entering this stage eliminates fouling of the RO membrane. A concentrated brine waste is generated from this step as well.

VERIFICATION OF PERFORMANCE

Daily grab samples were collected over a four-day period from the HERO™ influent, HERO™ effluent, HERO™ RO waste solution, copper recovery WAC unit influent, and copper recovery WAC unit effluent. Samples were analyzed to determine the contaminant levels before and after each process in order to calculate contaminant removal efficiency. Results from the HERO™ RO waste solution analysis were used for mass balance purposes, and to determine waste disposal restrictions and costs.

Average analytical results for key parameters are shown in **Table i.** Wastewater parameters of concern include heavy metals from metal finishing and other rinsing operations, hardness, alkalinity, specific conductivity, residual chlorine and cyanide from the conventional wastewater treatment system, sulfate, sulfides, nitrate, and total dissolved solids (TDS).

Various other parameters were monitored in order to determine external water quality standards compliance, such as local regulatory discharge as well as KCP recycled water quality standards.

Parameter	HEROÔ Influent (mg/l)	HEROÔ Effluent (mg/L)	KCP Recycle Standard (mg/L)	HEROÔ RO Waste (mg/L)	Disposal Limits (mg/L)
Aluminum	<0.075	<0.075	<0.075	0.537	-
Arsenic	<0.085	<0.085	<0.085	<0.085	1.82
Barium	0.024	<0.004	<0.0185	0.045	-
Cadmium	<0.005	<0.005	<0.005	<0.005	0.05
Calcium	112.2	0.2	<31.8	166.1	-
Chromium	<0.007	<0.007	<0.007	0.537	1.268
Copper	0.011	<0.01	<0.01	0.029	1.547
Iron	0.011	<0.04	<0.0429	0.027	-
Lead	<0.050	<0.050	<0.050	<0.050	0.316
Magnesium	0.09	<0.05	<6.88	1.10	-
Manganese	<0.007	<0.007	<0.007	0.0018	-
Mercury	<0.0002	<0.0002	<0.002	<0.0002	0.052
Molybdenum	0.252	<0.02	<0.02	4.502	-
Nickel	0.008	<0.03	<0.03	0.119	1.822
Silver	<0.007	<0.007	<0.007	0.016	0.197
Sodium	56.2	11.5	<31.6	440	-
Tin	<0.250	<0.250	<0.250	<0.250	-
Zinc	<0.100	<0.100	<0.100	<0.100	1.195
TDS	527	36	<246	5,192	-
TSS	<5.0	<5.0	<5.0	1.25	-
TOC	<10.0	<10.0	<10.0	37.3	-
O&G	<5.0	<5.0	<5.0	<5.0	150
Chloride	18.8	<1.0	<17.8	277	-
Fluoride [1]	0.8	0.3	<1.5	12.6	-
Nitrate as N	4.6	1.3	<2.13	70.4	-
Sulfate [1]	145.7	<1.0	<93.9	2,302.5	-
Sulfide	<0.500	<0.500	<0.500	<0.500	102
Total Alkalinity	148.8	29.9	<46	288.6	-
Total Cyanide	0.003	<0.005	<0.0212	0.074	0.86
Dissolved Silica	3.3	<1.0	<5.73	40.1	-
Total Residual Cl_2	<0.02	0.01	<2.14	<0.02	-
Specific Conductivity	1,116 (µS/cm)	142 (µS/cm)	<441	6,616	-

[1] This data is an estimate only, due to a wide range of accuracy used by the lab.
[2] Total Discharge Limits

Table i. Summary of Key Analytical Data

Wastewater & Copper Recovery. The recovery percentages for wastewater were consistently high. Using flowmeters installed on the HERO™ system influent and effluent, along with the system's operational schedule, accurate wastewater recoveries were calculated for each verification test day. The overall membrane flux was 17.7 gfd (gallons per foot per day), which is much higher than the industry standard of 11 gfd. These results indicate the HERO™ system is very efficient in recovering water for reuse within the facility. Copper recovery percentages from the separate WAC ion exchange unit were less pronounced, showing that the HERO™ system did a fair job of recovering copper for resale or reuse.

The relatively low concentration of copper in the influent could have had an effect on the copper recovery efficiency. Passing the water through the WAC unit multiple times may increase the copper recovery percentage significantly. Wastewater and copper recovery are summarized in **Table ii.**

	Average	Min	Max	Standard Deviation
Wastewater Recovery %	94.3	92.20	96.7	1.8
Copper Recovery %	40.6	25.6	51.3	11.2

Table ii. Summary of Wastewater & Copper Recovery

Contaminant Removal. Since this pilot test treated wastewater that had already gone through the KCP's traditional wastewater treatment process, the HERO™ influent already met local regulatory discharge limits for the sanitary sewer. The HERO™ influent did not meet the quality standards for in-facility reuse. The wastewater had excess levels of calcium, sodium, TDS, total alkalinity, and nitrate (as N). Throughout the four days of sampling, analysis showed that the daily average contaminant levels of the HERO™ effluent were low enough to meet KCP's recycled water standard. The HERO™ RO waste solution met the current local sanitary sewer discharge limits. Contaminant removal is summarized in **Table iii.**

	Average	Min	Max	Standard Deviation
Calcium % Removal	99.8	99.8	99.9	0.05
Sodium % Removal	79.7	69.7	89.8	9.13
Nitrate (as N) % Removal	68.0	63.5	77.9	6.65
Total Alkalinity % Removal	81.6	70.2	90.5	8.66
TDS % Removal	93.8	90.6	96.5	2.45

Table iii. Summary of Contaminant Removal

Energy Use. Energy requirements for operating the HERO™ pilot unit at the KCP included electricity for the five liquid feed pumps. Electricity is also used for system instrumentation, compressed air and reagent feed pumps; however, the energy requirements for these are less significant and were not evaluated during this project. Electricity for the pilot trailer lighting and air conditioning was also not included in the HERO™ system energy use calculations. Electricity use was determined to be 36.7 kWh/10,000 gallons (gal) of treated wastewater.

Waste Generation. A waste generation analysis was performed using operational data collected during the verification test period, and historical records from the KCP and Hydrometrics. Waste generation data normalized to the amount of wastewater processed over the verification test period showed an RO waste generation rate of about one gal for every 12.6 gal of wastewater treated. Implementation of the HERO™ system reconditioned the wastewater for potential reuse within the KCP, thus eliminating the discharge of this wastewater to the sanitary sewer. However, some of this waste reduction is offset by the RO waste solution and WAC ion exchange regeneration waste generated by the HERO™ system.

Since the WAC ion exchange system was not regenerated during the verification test period, a theoretical extrapolation had to be considered.

Chemical mass balance calculations determined a WAC regeneration waste solution creation rate of approximately one gal for every 128.5 gal of KCP wastewater processed. Analytical characterization of this waste stream was not possible, but historical records of the HERO's™ WAC regeneration waste solution for similar wastewaters indicate that a standard dischargeable water-softener-like regeneration solution would be generated. Hydrometrics provided an estimate of approximately one gal of combined pretreatment waste for every 41.3 gal of wastewater processed. The combined waste stream is a brine solution with a high hardness count, and is generally suitable for direct discharge to the sanitary sewer. The cumulative waste generation rate from the HERO™ system is approximately one gal for every 8.93 gal of wastewater processed, an overall waste reduction of 89 percent.

Operating and Maintenance Labor. Hydrometrics personnel operated the HERO™ pilot system during verification testing. The HERO™ system requires an operator during startup and shutdown. During operation, the system is self-regulating; however, for testing purposes, a Hydrometrics operator was on-site at all times during the HERO™ system operation. The operational tasks performed by the Hydrometrics operator during the verification test period included: daily inspections of the unit, recording of system parameters, filter change-outs, minor adjustments, and chemical additions. Considerable labor was expended when the membrane degassifier and SAC unit failed to operate initially, however, these were start-up equipment issues, and not counted as general operating and maintenance labor activities. The down-time of these components had no significant effects on water quality, chemical or electrical demand. Estimates by Hydrometrics and validation of operational tasks indicate that for a full-scale 86,400 gpd HERO™ system, approximately seven hours of operating and maintenance (O&M) labor each week would be required.

Cost Analysis. A cost analysis of the HERO™ system was performed using current operating costs and historical records from the KCP normalized to a cost/savings per gal of treated water. An estimated capital cost (2001) of a HERO™ system able to process the KCP average of 86,000 gpd of industrial wastewater is $270,000 (includes $216,000 for the system and $54,000 for installation costs). Based on the reduction of sewer discharge and cost avoidance realized from recycling the wastewater for reuse, the annual cost savings associated with the unit is approximately $60,065. The projected payback period would be approximately 4.5 years.

SUMMARY

The test results show that the HERO™ system provides an environmental benefit by conditioning the KCP's industrial wastewater for reuse within the facility, thereby reducing the amount of fresh make-up water required each day. The HERO™ system achieved a very high recovery of the treated water (94%), and a high membrane flux rate (1.6 times higher than the conventional norm). There was no indication of membrane fouling during the verification test period. Copper recovery operations performed marginally, but further adjustments and processing could yield significantly better results. The relatively low concentration of copper in the KCP wastewater may have been a poor matrix to test the effectiveness of the HERO™ system's metals recovery ability. The major economic benefit associated with this technology is in reduced waste disposal costs and raw water purchase costs associated with the recycling of the wastewater within the facility. When the labor and electrical costs associated with operating the HERO™ system are factored in, the payback period is approximately 4.5 years. The equipment vendor also claims that other benefits at some installations may include: reduced wastewater in support of zero liquid discharge, reduced clarifier or other pre-treatment needs, and improved operations associated with reuse of low-hardness, high-quality water. As with any technology selection, the end user must select appropriate wastewater treatment equipment and chemistry for a process that can meet their associated environmental restrictions, productivity, and water quality requirements.

Original signed by:
E. Timothy Oppelt

E. Timothy Oppelt
Director
National Risk Management Research Laboratory
Office of Research and Development
U.S. Environmental Protection Agency

Original signed by:
Donn Brown

Donn W. Brown
Manager
ETV Metal Finishing P2 Technologies Center
Concurrent Technologies Corporation

NOTICE: EPA verifications are based on evaluations of technology performance under specific, predetermined criteria and appropriate quality assurance procedures. EPA and *CTC* make no expressed or implied warranties as to the performance of the technology and do not certify that a technology will always operate as verified. The end user is solely responsible for complying with any and all applicable federal, state, and local requirements. Mention of commercial product names does not imply endorsement.

TABLE OF CONTENTS

1.0 INTRODUCTION 1

2.0 DESCRIPTION OF THREE-STAGE WASTEWATER TREATMENT SYSTEM .. 1

2.1 Three-Stage Wastewater Treatment Equipment 1

2.2 Test Site Installation 2

2.3 Operating Flow 5

2.3.1 KCP Conventional Wastewater Treatment 5

2.3.1.1 Cyanide Oxidation 5

2.3.1.2 Chromium Reduction 5

2.3.1.3 Lime Precipitation & Clarification 6

2.3.2 HERO™ Pretreatment 6

2.3.2.1 Prefiltration 6

2.3.2.2 SAC Ion Exchange 6

2.3.3 HERO™ System 6

2.3.3.1 WAC Ion Exchange Treatment 6

2.3.3.2 Membrane Degasification 7

2.3.3.3 pH Adjustment and Reverse Osmosis (RO) 7

3.0 METHODS AND PROCEDURES 7

3.1 Test Objectives 7

3.2 Test Procedure 10

3.2.1 System Set-Up 10

3.2.2 Testing 10

3.3 Quality Assurance/Quality Control 11

3.3.1 Data Entry 11

3.3.2 Sample Collection and Handling 11

3.3.3 Calculation of Data Quality Indicators 12

3.3.3.1 Precision 12

3.3.3.2 Accuracy 13

3.3.3.3 Completeness 13

3.3.3.4 Comparability 14

3.3.3.5 Representativeness 14

3.3.3.6 Sensitivity 14

4.0 VERIFICATION DATA 17
4.1 Analytical Results 17
ALUMINUM 18
4.2 Process Measurements 19
4.3 Wastewater Processing Data 20
4.4 Other Data 21
5.0 EVALUATION OF RESULTS 21
5.1 Wastewater & Copper Recovery 21
5.2 Contaminant Removal Efficiency 22
5.3 Mass Balance 24
5.4 Energy Use 25
5.5 Operating and Maintenance Labor Analysis 26
5.6 Chemical Use Analysis 26
5.7 Waste Generation Analysis 27
5.8 Cost Analysis 28
5.9 Project Responsibilities/Audits 29
6.0 REFERENCES 30

LIST OF TABLES

Table 1. Test Objectives and Related Test Measurements Conducted During the Verification of the Hydrometrics HERO™ System 9
Table 2. QA Objectives for Precision, Accuracy, and Detection Limits 16
Table 3. Summary of Analytical Results – Copper Recovery WAC 17
Table 4. Summary of Analytical Results - HERO™ 18
Table 5. Summary of Process Measurements 19
Table 6. KCP Conventional Wastewater Processing 20
Table 7. HERO™ System Wastewater Processing 21
Table 8. Other Data Collected During Verification 21
Table 9. Wastewater & Copper Recovery Efficiency 22
Table 10. Contaminant Removal Efficiency 24
Table 11. Mass Balance Results 25
Table 12. Results of Waste Generation Analysis 28

Table 13. Annual Costs/Savings 29

LIST OF FIGURES

Figure 1. HERO™ Wastewater Treatment System at Honeywell FM&T's KCP 4
Figure 2. HERO™ System Pilot Trailer..... 5
Figure 3. HERO™ System Chemical Reactions 8

LIST OF APPENDICES

APPENDIX A: Precision Calculations……... A-1
APPENDIX B: Accuracy Calculations…….. B-1
APPENDIX C: Representativeness Calculations……... C-1

1.0 INTRODUCTION

The High Efficiency Reverse Osmosis (HERO™) unit is a three-stage reverse osmosis (RO) wastewater treatment system for wastewater recycling and metals recovery. The verification test evaluated the ability of the HERO™ unit to purify wastewater from chemical rinses, spent baths, non-contact cooling, boiler blow-down, and laboratory sinks for potential reuse within a manufacturing facility. Additionally, the HERO™ system was tested for the recovery of copper from cyanide-bearing rinsewater from copper plating operations. It was tested by *CTC* under the U.S. Environmental Protection Agency (EPA) Environmental Technology Verification Program for Metal Finishing P2 Technologies (ETV-MF). The purpose of this report is to present the results of the verification test.

The HERO™ system was tested to evaluate and characterize the operation of the RO wastewater treatment system through measurement of various process parameters. Testing was conducted at Honeywell Federal Manufacturing & Technology's (FM&T's) Kansas City Plant (KCP), in Kansas City, Missouri. The KCP is owned by the U.S. Department of Energy (DOE), and is operated by Honeywell FM&T. The KCP manufactures a wide range of electronic, mechanical, and engineered material components for national defense systems.

2.0 DESCRIPTION OF THREE-STAGE WASTEWATER TREATMENT SYSTEM

2.1 Three-Stage Wastewater Treatment Equipment

The HERO™ wastewater treatment system utilizes a three-stage process: weak acid cation (WAC) ion exchange, membrane degasification, and high-pH RO. WAC ion exchange is used to remove hardness associated with alkalinity. Additionally, cations (such as copper, barium, iron, manganese, zinc and sodium) may also be removed. Treated water is slightly acidic. The bicarbonate alkalinity in the water is converted to carbon dioxide. Additional acid may be added to convert the remaining alkalinity to carbon dioxide. After degasification in the next step, the total dissolved solids (TDS) are reduced. The WAC is regenerated periodically using sulfuric or hydrochloric acid. The concentrated waste brine solution is mixed with the RO reject stream for disposal. Alternatively, the brine solution could be recirculated to a clarifier, if one is used as pretreatment to the HERO™ system, for further precipitation of any remaining contaminants.

After WAC ion exchange treatment, the water is passed through a counter-current air stripper (membrane degasifier) to remove the carbon dioxide created in the WAC ion exchange process. This step removes the buffering capacity of the water, thereby minimizing caustic addition in the next step.

In the high-pH RO step, a small amount of caustic is used to increase the pH prior to treatment. Operating at high pH has several important advantages:

- <u>Fats and oils are emulsified.</u> These materials are kept in solution and rejected rather than plating out on the membrane surface.

- Silt fouling is eliminated. Membranes used in normal RO systems become fouled with silt, biological growth, and organic matter. When this occurs, the membranes are cleaned with softened water at pH 10. HERO™ systems operate continuously with softened feed water at pH 10. Silt and organic matter are continuously cleaned from the membrane surface and biological growth is eliminated.

- Silica solubility is increased. Increased silica solubility at high pH prevents silica scaling on the membrane. Silica can often be a limiting factor controlling the recovery limit of an RO system.

- Weak organic acids are neutralized. Low concentrations of these acids can foul membranes unless they are ionized. Once neutralized at high pH, the membranes reject these ions.

The technology utilizes proven and available "off-the-shelf" equipment components. The equipment is compact (about 8' x 20' depending on flow and application), skid-mounted, and modular for simple expansion. Electrical service of 480 volt, 50 amperes (amp), 3-phase, 60 hertz (Hz) is required. Automated operations result in low operating and maintenance costs. The unit usually operates in a continuous mode, although it also has the capability to operate in a batch mode. Existing RO systems can be easily retrofitted to operate in the HERO™ configuration.

2.2 Test Site Installation

Hydrometrics, Inc., selected the Honeywell FM&T's KCP in Kansas City, Missouri, as the test site for the verification testing of the HERO™ system. Honeywell FM&T, a prime contractor for the DOE, manages and operates the approximately one million square foot KCP. Honeywell and its divisions produce many high-tech products for consumer and government use. Virtually every form of air transportation depends on at least one of Honeywell's systems, including every manned space flight since the beginning of the U.S. space program.

The KCP manufactures electronic, mechanical, and engineered material components for national defense systems. Within the engineered material components operations they have capabilities for applying and evaluating low and zero volatile organic carbon (VOC) paints, dry film lubricants, and powder coatings. Plasma, electrophoresis, and chemical surface pretreatments are also available. Electroplated coating applications include copper, tin, tin-lead, zinc, cadmium, nickel, electroless nickel, hard and soft gold, rhodium, and black and brown oxides. They electroform copper, nickel, and gold. On difficult-to-plate substrates, a combination of vacuum deposition and electroplating is used to achieve adherent coatings.

The microelectronics manufacturing division of the facility consists of 19,000 square feet (ft^2) of clean rooms, 1,800 ft^2 of laser rooms, and 26,000 ft^2 of manufacturing and support area.

Capabilities include Thin Film Networks, Thick Film Networks, and Low Temperature Co-fired Ceramic Networks. Several film materials including titanium, palladium, palladium-gold, platinum-gold, gold, silver, copper, and chromium are applied to a variety of substrate materials using processes such as electroplating, sputtering, and plasma vapor deposition (PVD).

These plating, coating, and other metal processing operations generate wastewaters that are combined with other non-process industrial wastewaters and treated in a conventional on-site wastewater treatment system, and then discharged to a Publicly Owned Treatment Works (POTW). The HERO™ system was installed after the conventional system to process the wastewater so it can be reused at the KCP.

Since industrial wastewater quality is inherently site-specific, wastewater treatment systems are generally designed for specific applications. For example, feed water with elevated hardness, total hardness in excess of total alkalinity, high total suspended solids (TSS), or high oil and grease (O&G) may require additional pretreatment prior to the HERO™ system. This pretreatment may include filters, strong acid cation (SAC) ion exchange, or clarifiers. For reasons like this, HERO™ systems are designed to address the specific wastewater quality characteristics of the host facility. Water conditions at the KCP required the use of a multimedia prefilter and a SAC ion exchange unit. A diagram of the HERO™ system, as it was installed at the KCP, is shown in **Figure 1**.

For the verification test, the KCP had a mobile unit installed following their conventional wastewater treatment system. The mobile unit only treated a small portion of the daily KCP wastewater effluent for demonstration purposes. Pictures of a mobile HERO™ system like the one installed at the KCP for the verification test are provided for reference in **Figure 2**.

Copper was recovered from the plating shop cyanide rinse water waste stream by employing a separate WAC ion exchange unit supplied by Hydrometrics, Inc. This smaller, separate unit removed copper that was complexed with cyanide. Normally, metals recovery with the HERO™ process is achieved in the WAC ion exchange unit that is integral to the three-step treatment process. However, since cyanide oxidation results in copper precipitation, copper removal is more efficient prior to KCP's traditional cyanide oxidation process. A full-scale separate WAC ion exchange unit would have been regenerated with sulfuric acid; however, due to the relatively short duration of the verification test, regeneration was not necessary or feasible. The quantity of recovered copper is calculated by mass balance.

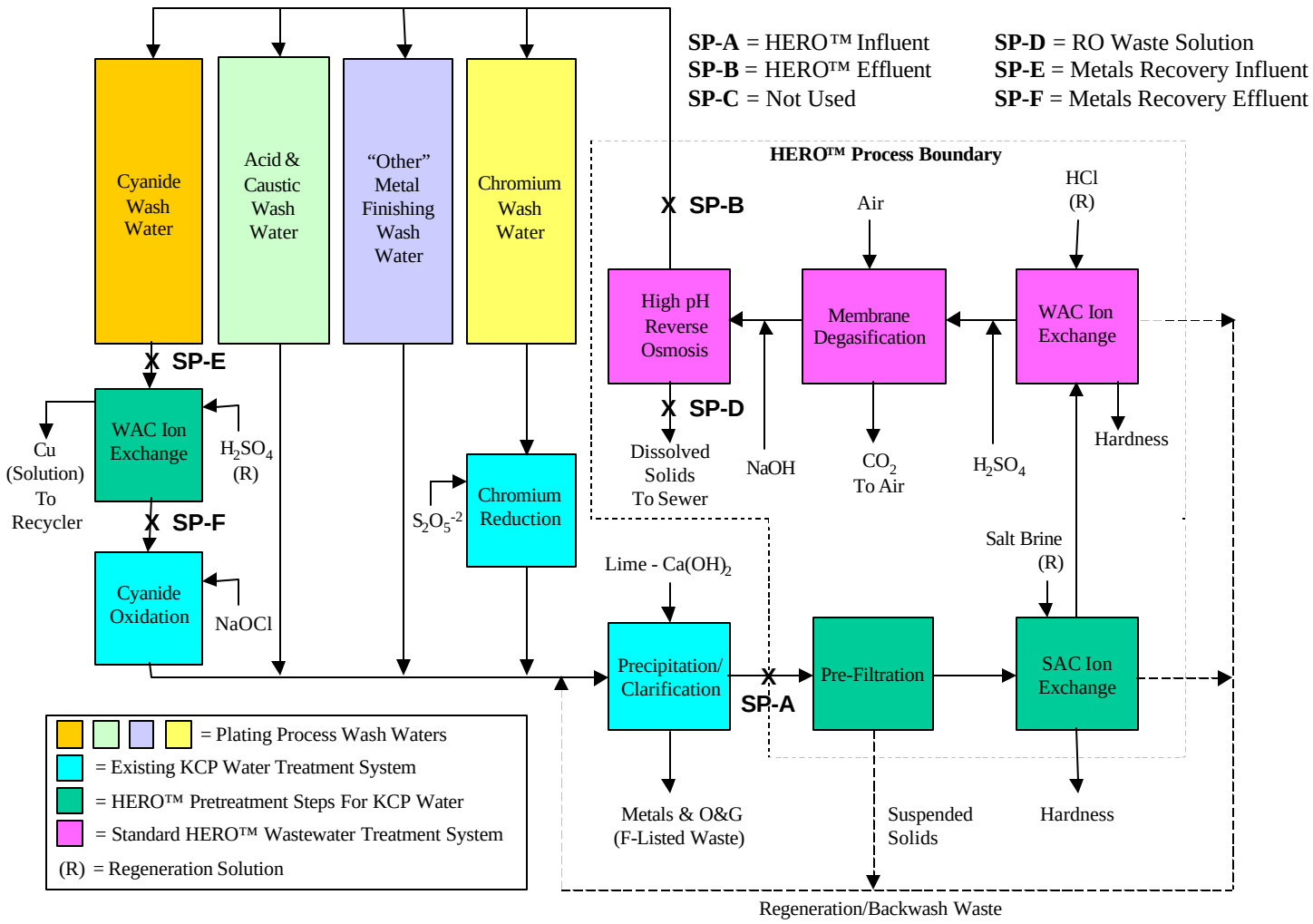

Figure 1. HEROÔ Wastewater Treatment System at Honeywell FM&T's KCP

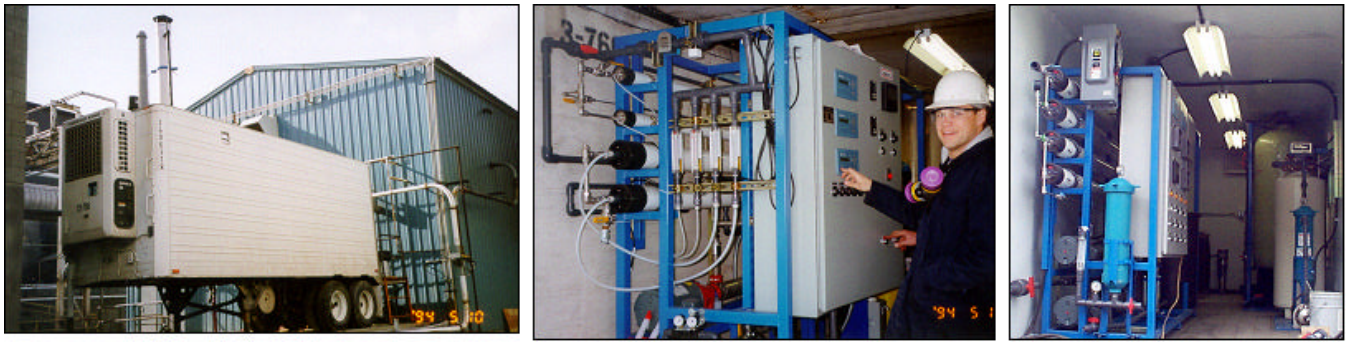

Figure 2. HEROÔ System Pilot Trailer

2.3 Operating Flow

Wastewater flow at the KCP Industrial Wastewater Pre-Treatment Facility (IWPF) follows a conventional multi-step process. Cyanide-bearing rinsewaters are collected in two 10,657-gallon (gal) storage tanks. Chromium-bearing rinsewaters are collected in two 22,520-gal storage tanks. Acid/caustic rinsewaters are collected in two 74,642-gal storage tanks, and non-process industrial wastewater is collected in two 214,207-gal storage tanks. Each pair of storage tanks can be operated in a "collection" or "feed" mode, isolated from each other, and circulation pumps within each storage tank continually keep the wastewater well mixed. Wastewater is drawn from each isolated, well mixed feed tank for conventional treatment, while the collection tank is open, and accepting wastewater from the manufacturing facility. Collection and feed tanks typically reverse roles each night, after plant shutdown, as the feed tank's wastewater becomes depleted.

2.3.1 KCP Conventional Wastewater Treatment

2.3.1.1 Cyanide Oxidation

Copper/cyanide-bearing rinse waters are formed when drag-out or drippage from cyanide plating baths contaminate rinse baths during normal copper plating operations. The wastewater goes through a normal cyanide oxidation process using sodium hypochlorite. This is necessary to prevent health and safety issues associated with the release of cyanide gas later in the treatment system.

2.3.1.2 Chromium Reduction

Another conventional step of the KCP wastewater treatment process is the reduction of chromium in the chromium plating rinse waters. The chromium plating rinse waters are treated with metabisulfite (MBS) in order to reduce chromium in the hexavalent state to the more stable and less toxic trivalent chromium state. The effluent from this step moves directly to the next conventional step, precipitation/clarification.

2.3.1.3 Lime Precipitation & Clarification

Spent rinse water from the cyanide oxidation, chromium reduction, acid and caustic rinse water, and other non-process industrial wastewater are then commingled in 3,750-gal flash mix tanks, where they are treated with a sodium hydroxide/lime slurry and mechanically mixed. They are pumped at a rate of approximately 170 gal per minute (gpm) into the conventional wastewater clarifier. Approximately 80,000 gal of combined wastewater per day are treated in this conventional lime precipitation/ clarification unit during the single 10-hour operating shift. This system removes metals and O&G, and provides a consistent water quality feed to the sand filter and final pH adjustment/monitoring before discharge to the sanitary sewer. The concentrated reject from the clarifier is pressed, dried, and sent for disposal as an F006 waste.

2.3.2 HEROÔ Pretreatment

2.3.2.1 Prefiltration

In addition to the normal three-stage HERO™ process, the post-clarified feed water will be pretreated prior to going through the HERO™ process. The first step of HERO™ pretreatment will be to pass the water through a multimedia prefilter to remove residual suspended solids. Removing these solids will keep the RO membranes from becoming damaged.

2.3.2.2 SAC Ion Exchange

Water from the multimedia prefilter will then go through a SAC ion exchange process. This is necessary due to the high hardness-to-alkalinity ratio of the wastewater at this point. (SAC ion exchange treatment is not normally required for full-scale treatment if pre-softened water is used. The equipment vendor claims that a full-scale system could support 95 percent recycle of the water. A standard water softener could be used to treat the 5 percent make-up water stream, and eliminate hardness from the process water circuit.) SAC ion exchange treated water is then sent to the first step in the standard HERO™ process, the WAC ion exchange unit.

2.3.3 HEROÔ System

2.3.3.1 WAC Ion Exchange Treatment

Wastewater from the pretreatment process is pumped into the HERO™ system at a flow rate of approximately 18 gpm. Wastewater from the SAC ion exchange flows into the WAC ion exchange step of the HERO™ process to remove all remaining hardness. Because the WAC resin is in acid form, this step also lowers the pH of the water to approximately 4.5,

and converts carbonate and bicarbonate to carbon dioxide. When required (approximately every 20–30 days of operation), this unit is regenerated using a dilute solution of hydrochloric acid.

2.3.3.2 Membrane Degasification

From the WAC ion exchange outlet, the wastewater goes through degasification to remove carbon dioxide. This step removes the buffering capacity of the water, minimizing pH adjustment costs. Acid addition prior to the degasifiers may be necessary to lower the pH to below 4.5 for complete carbon dioxide conversion.

2.3.3.3 pH Adjustment and Reverse Osmosis (RO)

The final step in the HERO™ system is adjustment to pH 10 and RO treatment. Operating the RO at high pH avoids bio-fouling and silica scaling, and enhances silt rejection. Treated wastewater is returned to the rinse water make-up system at a flow of approximately 17 gpm. Under current regulatory discharge limits, the RO reject can be discharged to the sanitary sewer.

The diagram in **Figure 3** illustrates the reactions that typically take place within the HERO™ system.

3.0 METHODS AND PROCEDURES

3.1 Test Objectives

The following are statements of specific project objectives (see **Table 1** for summary):

- Evaluate, document, and verify the performance of the separate HERO™ wastewater WAC ion exchange treatment technology for the recovery of copper that builds up in the process rinse water during the cyanide-containing finishing operations. Characterize the recovered copper for salability options.
- Evaluate, document, and verify the HERO™ wastewater treatment technology's removal efficiency for TDS, O&G (as HEM), Ag, Al, As, Ba, Ca, Cd, Cl, CN, Cr, Cu, Fe, Hg, Mg, Mn, Mo, Na, Ni, Pb, Sn, Zn, total residual chlorine, sulfate, nitrate, sulfides, chloride, fluoride, dissolved silica, total alkalinity, TOC, and TSS that accumulate in process rinse waters during finishing operations and other industrial wastewater generating operations.
- Quantify the energy required to operate the system. Primary energy users include the electrical service to the automated system, instrument readouts, and the liquid feed pumps. This information will be used to estimate operating costs for the HERO™ wastewater treatment system.
- Quantify environmental benefit by determining the reduction in wastewater disposal quantities versus HERO™ waste sludge quantities/characteristics.

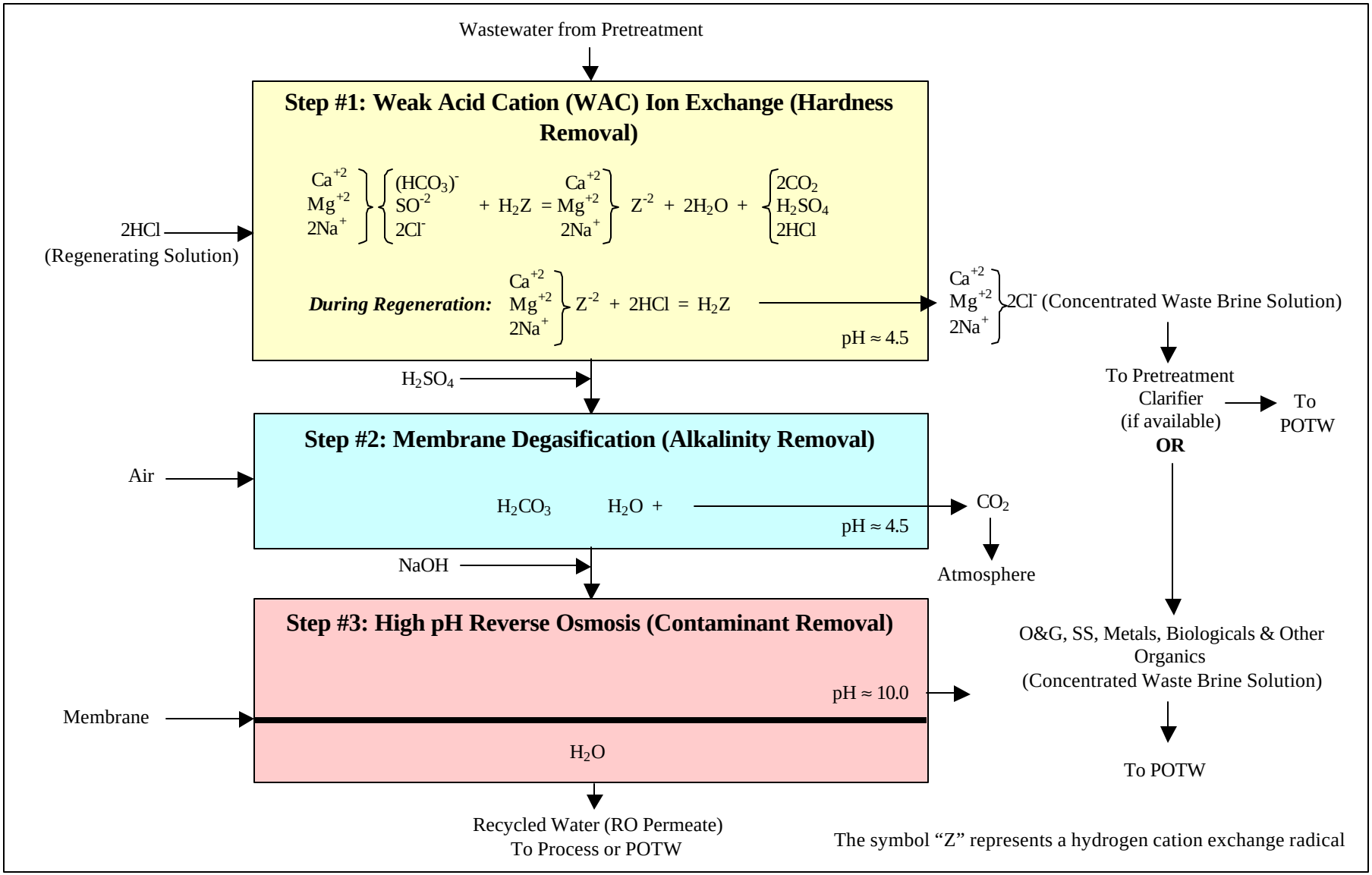

Figure 3. HEROÔ System Chemical Reactions

Test	Test Objectives	Test Measurement
1. HERO™ System Wastewater Recovery	Prepare a material balance for wastewater constituents.	• Chemical characteristics of influent. • Chemical characteristics of effluent. • Volume and chemical characteristics of the RO waste solution. • Quantity of treatment chemicals used during testing.
	Evaluate the ability of the HERO™ system to process wastewater and separate chemical contaminants from water.	• Chemical characteristics of influent. • Chemical characteristics of effluent.
	Determine the wastewater recovery rate of the system, normalized based on production throughput of wastewater.	• Volume of water recovered. • Production throughput of wastewater.
	Determine the labor requirements needed to operate and maintain the HERO™ system.	• O&M labor requirements during test period.
	Determine the quantity of energy consumed by the HERO™ system during operation.	• Quantity of energy used by pumps and motors.
	Determine the cost of operating the wastewater recycle system for the specific conditions encountered during the testing.	• Costs of O&M labor, materials, and energy required during test period. • Quantity and price of treatment chemicals used during testing.
	Quantify/identify the environmental benefit.	• Review of historical waste disposal records and compare to verification test practices.
2. WAC Ion Exchange Unit Copper Recovery	Prepare a material balance for copper recovered from the cyanide-bearing wastewaster.	• Chemical characteristics (Cu) of influent. • Chemical characteristics (Cu) of effluent. • Volume and chemical characteristics of copper removed from the wastewater. • Quantity of treatment chemicals used to recover the copper.
	Evaluate the ability of the WAC ion exchange unit to process wastewater and separate copper contaminants from water.	• Chemical characteristics (Cu) of influent. • Chemical characteristics (Cu) of effluent.
	Determine the copper recovery rate of the system, normalized based on production throughput of wastewater.	• Volume of copper recovered. • Production throughput of wastewater.
	Determine the labor requirements needed to operate and maintain the WAC ion exchange unit.	• O&M labor requirements during test period.
	Determine the cost of operating the WAC ion exchange unit for the specific conditions encountered during the testing.	• Costs of O&M labor and materials required during the test period. • Quantity and price of chemicals used during copper recovery.
	Quantify/identify the environmental benefit.	• Review of historical waste disposal records and comparison to verification test practices.

Table 1. Test Objectives and Related Test Measurements Conducted During the Verification of the Hydrometrics HERO™ System

3.2 Test Procedure

3.2.1 System Set-Up

Prior to testing, the trailer-mounted HERO™ system was parked on a concrete pad adjacent to the building housing the existing lime precipitation clarifier wastewater treatment system. A blind sump surrounded the concrete pad, as this was a designated chemical loading/unloading area, complete with secondary containment. The separate copper recovery ion exchange unit was installed within the KCP wastewater treatment plant, inside the secondary containment sump area in the chemical transfer/storage bay. Treated water from KCP's conventional wastewater treatment plant was piped to the main HERO™ system, while the copper recovery ion exchange unit treated isolated cyanide-bearing rinse water from a continuously mixed 55-gal drum at a rate of approximately 16 milliliters per minute (mL/min). The HERO™ system polished wastewater at a rate of approximately 18 gpm, the target operating rate established by Hydrometrics for this test. Sampling proceeded once the unit was in operation and stabilized.

3.2.2 Testing

The HERO™ system and separate copper recovery WAC ion exchange unit were tested in accordance with the verification test plan [Ref. 1]. Testing for each operation was conducted during four consecutive days of wastewater processing.

The main HERO™ system was tested on the KCP's post-conventionally-treated wastewater. A large portion (46 percent) of the combined KCP wastewater is dilute, non-production wastewater. This non-production wastewater consists of non-contact cooling water, boiler blow-down water, laboratory sink water, etc. The remaining 54 percent of the KCP's spent process water consists of non-metal-finishing industrial process wastewaters, and rinse waters from metal finishing.

A very small amount of KCP's wastewater, about 330 gal per day (gpd), is cyanide-bearing rinse water from the KCP metal finishing shop's copper plating operations. Copper is a potential recyclable/salable metal, and this verification test included a separate WAC ion exchange unit that treated rinse water from the cyanide rinse water storage tank before it was sent to the first step of the cyanide oxidation process. This WAC unit used resin identical to the WAC unit within the HERO™ system where metals recovery would normally take place, but on a smaller scale. Due to the KCP's conventional wastewater treatment system, a separate WAC unit had to be installed upstream of that system in order to recover the copper. Because of the small amount of cyanide-bearing rinse water generated at the KCP, copper recovery was not economically feasible. The verification on this WAC unit was to demonstrate the HERO™ system's ability to remove valuable metals for recovery, recycle and/or sale.

As in most field tests, mechanical and equipment problems arose during the verification test. Most of these problems were minor and had no effect whatsoever on the data collected during the test. However, two problems occurred that may have had a small effect on operating procedures and chemical usage. First, the membrane degasifier unit was not operational during the verification test period. The purpose of the membrane degasifier is to remove the carbon dioxide from the wastewater that was generated during the WAC ion exchange stage. This lowers the buffering capacity of the wastewater, in turn minimizing the pH adjustment costs required for the next stage, RO. The result of the membrane degasifier not operating during the test was an 18 percent increase in sodium hydroxide usage to bring the wastewater up to a pH of 10 prior to going into the RO stage. Since this 18 percent increase over the first two days was equivalent to less than a gallon of sodium hydroxide, the chemical cost increase was very small. There was no effect to water quality or electricity demand.

The other equipment problem was related to the SAC ion exchange unit used in the pretreatment of the wastewater before it entered the main HERO™ system. This unit was not in operation at the start of the verification test, and was not repaired and back online until the end of the second day of testing. Wastewater bypassed the SAC unit and went directly from the multimedia prefilters into the WAC ion exchange stage of the HERO™ system. The effect of the SAC ion exchange unit not operating was an increase in hardness in the RO feed and reject. The HERO™ system was able to handle this increase in hardness, and removed it during the WAC ion exchange and RO stages. There was no increase in chemical usage due to the SAC ion exchange unit being offline for the first two days of testing. There was no increase in electrical demand, and no effect on HERO™ system effluent water quality. Only the RO waste solution showed an increase in hardness, and since hardness is not a regulatory discharge parameter, it did not affect the disposition or cost requirements of the RO waste solution.

3.3 Quality Assurance/Quality Control

3.3.1 Data Entry

Sampling events, process measurements, and all other data were recorded by the ETV-MF Project Manager on pre-designed forms provided in the verification test plan [Ref. 1].

3.3.2 Sample Collection and Handling

Prior to the verification test, sampling ports were identified within the HERO™ trailer for wastewater influent, effluent, and RO waste solution. Sampling ports for cyanide-bearing rinse water influent and effluent were also identified on either side of the separate copper recovery WAC ion exchange unit in the KCP chemical storage bay. Where necessary, polyethylene tubes were connected to the sampling ports and directed into appropriate aqueous sample containers.

Appropriately sized grab samples were taken directly from the sampling port after the sampling lines were purged. During sampling, the sample containers were kept cool by placing them in a cooler containing ice.

All aqueous grab samples were collected in the appropriate sample containers at approximately 24-hour intervals over a four-day period. At the end of each sampling period, the containers were labeled, bagged, packed in ice, and immediately delivered to the analytical laboratory by the ETV-MF Project Manager. All shipments were secured with strapping tape and security seals, and accompanied by a chain of custody (COC) form.

A field blank sample was also collected during the last day of the verification test. The field blank consisted of deionized water purchased from a nearby grocery store. This sample was collected, stored, transported, and analyzed in an identical fashion to those samples collected during the verification test period.

A historical sample of the KCP's tap water was taken from the IWPF laboratory sink faucet several months earlier by the ETV-MF Project Manager on an earlier test site visit. This sample was collected, stored, transported, and analyzed in an identical fashion to those samples collected during the verification test period. The analytical results were used as the recycled water quality standard for the wastewater treated by the HERO™ system during the verification test.

3.3.3 Calculation of Data Quality Indicators

Data reduction, validation, and reporting were conducted according to the verification test plan [Ref. 1] and the ETV-MF Quality Management Plan (QMP) [Ref. 2]. Calculations of data quality indicators are discussed in this section.

3.3.3.1 Precision

Precision is a measure of the agreement or repeatability of a set of replicate results obtained from duplicate analyses made in the laboratory under identical conditions. To satisfy the precision objectives, the replicate analyses must agree with the defined deviation limits, which are expressed as a percentage and are shown in **Table 2**. The Relative Percent Difference (RPD) is calculated as follows:

$$\text{RPD} = \left\{ \frac{|X_1 - X_2|}{\frac{(X_1 + X_2)}{2}} \right\} \text{x}100\ \%$$

where:

X_1 = larger of the two observed values
X_2 = smaller of the two observed values

The analytical laboratories performed a total of 131 precision evaluations on aqueous samples. All but three of the results were within the precision limits identified in the verification test plan [Ref. 1]. These results consisted of two dissolved silica samples and a cyanide sample. Excluding these three results from the data set had no effect on the reported conclusions. The results of the precision calculations are summarized in **Appendix A.**

3.3.3.2 Accuracy

Accuracy is a measure of the agreement between an experimental determination and the true value of the parameter being measured. Analyses with spiked samples were performed to determine percent recoveries as a means of checking method accuracy. The accuracy required for this project is shown in **Table 2** The percent recovery (P), expressed as a percentage, is calculated as follows:

$$P = \left[\frac{(SSR - SR)}{SA}\right] x\ 100\%$$

where:

SSR = Spiked sample result
SR = Sample result (native)
SA = the concentration added to the spiked sample

Quality Assurance (QA) objectives are satisfied for accuracy if the average recovery is within selected goals. The analytical laboratories performed 104 accuracy evaluations on aqueous samples. All but three results were within the limits identified in the verification test plan [Ref. 1]. These results consisted of a nitrate (as N), a calcium, and a cyanide sample. Excluding these three results from the data set had no effect on the reported conclusions. The results of the accuracy calculations are summarized in **Appendix B.**

3.3.3.3 Completeness

Completeness is defined as the percentage of measurements judged to be valid compared to the total number of measurements made for a specific sample matrix and analysis. The required completeness for this project is shown in **Table 2.** Completeness, expressed as a percentage, is calculated using the following formula:

$$\text{Completeness} = \frac{\text{Valid Measurements}}{\text{Total Measurements}} \times 100\%$$

QA objectives are satisfied if the percent completeness is 90 percent or greater. 318 out of 327 measurements made during this verification project were determined to be valid, for a completeness of 97.2 percent. Therefore, the completeness objective was satisfied.

3.3.3.4 Comparability

Comparability is a qualitative measure designed to express the confidence with which one data set may be compared to another. Sample collection and handling techniques, sample matrix type, and analytical method all affect comparability. Comparability was achieved during this verification test by the use of consistent methods during sampling and analysis and traceability of standards to a reliable source.

3.3.3.5 Representativeness

Representativeness refers to the degree to which the data accurately and precisely represent the conditions or characteristics of the parameter being tested. For this verification project, one field duplicate sample was collected from each sample location and sent to the laboratory for analysis. Representativeness was calculated as an RPD of these field duplicates. A total of 92 representativeness calculations were performed. All but three of the results were within the limits identified in the verification test plan [Ref. 1]. These results consisted of a fluoride, a sulfate, and a cyanide sample. Excluding these three results from the data set had no effect on the reported conclusions. The results of these calculations are summarized in **Appendix C**.

3.3.3.6 Sensitivity

Sensitivity is the measure of the concentration at which an analytical method can positively identify and report analytical results. The sensitivity of a given method is commonly referred to as the detection limit. Although there is no single definition of this term, the following terms and definitions of detection were used for this project.

Instrument Detection Limit (IDL) is the minimum concentration that can be differentiated from instrument background noise; that is, the minimum concentration detectable by the measuring instrument.

Method Detection Limit (MDL) is a statistically determined concentration. It is the minimum concentration of an analyte that can be measured and reported with 99 percent confidence that the analyte concentration is greater than zero, as determined in the same or a similar sample matrix. In other words, this is the lowest concentration that can be reported with confidence. It is directly affected by the IDL. The MDLs for this verification project are shown in **Table 2**.

Method Reporting Limit (MRL) is the concentration of the target analyte that the laboratory has demonstrated the ability to measure within specified limits of precision and accuracy during routine laboratory operating conditions. [This value is variable and highly matrix dependent. It is the minimum concentration that will be reported without qualifications by the laboratory.] The MRLs for this verification project are shown in **Table 2**.

Measurement	Matrix	Method	Units	Method of Determination	MDL	MRL	Precision (RPD)	Accuracy % Recovery	Completeness
TOC	Aqueous	EPA 9060	mg/L	Combustion / Oxidation	1.0	10.0	< 30	70–130	90
O&G (as HEM)	Aqueous	EPA 1664	mg/L	Gravimetric	5.00	5.00	< 30	61–127	90
Metals (- Hg)	Aqueous	EPA	mg/L	ICP-AES	0.001-	0.004–	< 30	70–130	90
Hg	Aqueous	EPA	mg/L	Manual Cold Vapor	0.0002	0.0002	< 30	70–130	90
Total Sulfide	Aqueous	EPA	mg/L	Titrimetric, Iodine	1.000	0.5	< 30	70–130	90
Total Cyanide	Aqueous	EPA	mg/L	Colorimetric, Automated UV	0.005	0.005	< 30	61–113	90
Chloride	Aqueous	EPA	mg/L	Ion Chromatography	0.020	1.0	< 30	70–130	90
Sulfate	Aqueous	EPA	mg/L	Ion Chromatography	0.040	1.0	< 30	10–170	90
Nitrate	Aqueous	EPA	mg/L	Ion Chromatography	0.010	1.0	< 30	70–130	90
Fluoride	Aqueous	EPA	mg/L	Ion Chromatography	0.020	0.2	< 30	16–178	90
Total Alkalinity	Aqueous	EPA	mg/L	Colorimetric (Methyl Orange)	1.00	1.0	< 30	70–130	90
Dissolved Silica	Aqueous	EPA	mg/L	Colorimetric	2.0	1.0	< 30	70–130	90
TSS	Aqueous	EPA	mg/L	Gravimetric	4.00	5.0	< 30	N/A	90
TDS	Aqueous	EPA	mg/L	Gravimetric	10.00	5.0	< 30	N/A	90
Total Residual Cl_2	Aqueous	EPA	mg/L	DPD-Colorimetric	0.01	0.01	< 2	N/A	90
Flow Rate	Aqueous	EPA 3.1.9	L/hr	Ultrasonic Flowmeter	0.3–3.6	0.3–3.6	< 1	N/A	90
Temperature	Aqueous	EPA	°C	Thermometric	0.1	0.1	< 1	N/A	90
pH	Aqueous	EPA	pH	Electrometric	0.01	0.01	< 0.2	N/A	90
Specific Cond.	Aqueous	EPA	µS/cm	Wheatstone Bridge-Type	1.0	1.0	< 2	N/A	90
Membrane Flux	Aqueous	-	gfd	Calculated	N/A	N/A	N/A	N/A	N/A

EPA/821/C-99/004: EPA Methods and Guidance for Analysis of Water
EPA SW-846: EPA Test Methods for Evaluating Solid Waste
ICP-AES: Inductively Coupled Plasma-Atomic Emission Spectroscopy
N/A: Not applicable

Table 2: QA Objectives for Precision, Accuracy, and Detection Limits

4.0 VERIFICATION DATA

4.1 Analytical Results

A complete summary of analytical data for the HERO™ verification test is presented in **Table 3** and **Table 4** Samples were collected over a four-day period and analyzed for the parameters identified. During the four-day verification test, daily grab samples were collected from the HERO™ system influent, coded as "HERO IN"; the HERO™ system effluent, coded as "HERO EFF"; the HERO™ system RO waste solution, coded as "RO Waste"; the separate copper recovery WAC unit influent, coded as "WAC IN"; and the separate copper recovery WAC unit effluent, coded as "WAC EFF." Average values calculated for both operations' IN and EFF are also shown. The KCP water quality recycle standard results, obtained from sampling the KCP's tap water on a previous visit to KCP, are coded as "STD" in the table. The samples coded "FB" are field blank samples collected on the last day of testing utilizing store-bought deionized water.

The primary contaminants of the post-conventionally-treated KCP wastewater that are preventing the water from being recycled are Ba, Ca, Cu, Mo, Ni, Na, TDS, chloride, nitrate (as N), sulfate and total alkalinity. The separate copper recovery WAC unit influent and effluent were analyzed only for copper.

	WAC IN					WAC EFF				
Sample Day ➔	**1**	**2**	**3**	**4**	**Avg**	**1**	**2**	**3**	**4**	**Avg**
Copper	0.472	0.493	0.486	0.470	**0.480**	0.252	0.367	0.296	0.229	**0.286**

NOTE: All measurements are in mg/L.

Table 3. Summary of Analytical Results – Copper Recovery WAC

	HEROÔ IN					HEROÔ EFF					RO Waste					STD	FB
Sample Day ➔	**1**	**2**	**3**	**4**	**Avg**	**1**	**2**	**3**	**4**	**Avg**	**1**	**2**	**3**	**4**	**Avg**	**-**	**-**
Aluminum	<0.075	<0.075	<0.075	<0.075	<0.075	<0.075	<0.075	<0.075	<0.075	<0.075	<0.075	0.435	0.472	1.24	<0.56	<0.075	<0.075
Arsenic	<0.085	<0.085	<0.085	<0.085	<0.085	<0.085	<0.085	<0.085	<0.085	<0.085	<0.085	<0.085	<0.085	<0.085	<0.085	<0.085	<0.085
Barium	0.0286	0.0187	0.0226	0.0248	0.024	<0.004	<0.004	<0.004	<0.004	<0.004	0.0195	0.0179	0.0905	0.0532	0.045	0.0185	<0.004
Cadmium	<0.005	<0.005	<0.005	<0.005	<0.005	<0.005	<0.005	<0.005	<0.005	<0.005	<0.005	<0.005	<0.005	<0.005	<0.005	<0.005	<0.005
Calcium	131	88.7	105	124	112.2	0.121	0.172	0.227	0.217	0.2	9.06	21.5	336	298	166.1	31.8	<0.100
Chromium	<0.007	<0.007	<0.007	<0.007	<0.007	<0.007	<0.007	<0.007	<0.007	<0.007	0.0312	0.0218	0.0229	0.0255	0.025	<0.007	<0.007
Copper	<0.01	<0.01	<0.01	0.0453	<0.019	<0.01	<0.01	<0.01	<0.01	<0.01	0.025	0.025	0.0101	0.0562	0.029	<0.01	<0.01
Iron	<0.04	<0.04	0.045	<0.04	<0.041	<0.04	<0.04	<0.04	<0.04	<0.04	0.0559	<0.04	0.0527	<0.04	<0.047	0.0429	<0.04
Lead	<0.050	<0.050	<0.050	<0.050	<0.050	<0.050	<0.050	<0.050	<0.050	<0.050	<0.050	<0.050	<0.050	<0.050	<0.050	<0.050	<0.050
Magnesium	<0.050	0.186	0.175	<0.050	<0.115	<0.050	<0.050	<0.050	<0.050	<0.050	<0.050	<0.050	3.36	1.06	<1.13	6.88	<0.050
Manganese	<0.007	<0.007	<0.007	<0.007	<0.007	<0.007	<0.007	<0.007	<0.007	<0.007	0.0072	<0.007	<0.007	<0.007	<0.007	<0.007	<0.007
Mercury	<0.0002	<0.0002	<0.0002	<0.0002	<0.0002	<0.0002	<0.0002	<0.0002	<0.0002	<0.0002	<0.0002	<0.0002	<0.0002	<0.0002	<0.0002	<0.000	<0.0002
Molybdenum	0.203	0.447	0.193	0.166	0.252	<0.020	<0.020	<0.020	<0.020	<0.020	3.4	9.79	3.22	1.6	4.502	<0.020	<0.020
Nickel	<0.03	0.0322	<0.03	<0.03	<0.031	<0.03	<0.03	<0.03	<0.03	<0.03	0.131	0.239	0.129	0.0933	0.119	<0.03	<0.03
Silver	<0.007	<0.007	<0.007	<0.007	<0.007	<0.007	<0.007	<0.007	<0.007	<0.007	0.0301	0.0114	0.0135	0.0071	0.016	<0.007	<0.007
Sodium	60.9	40.9	42.9	80.3	56.2	19.1	11.2	7.0	8.7	11.5	1,760	<0.15	<0.15	<0.15	<440.1	31.6	0.249
Tin	<0.250	<0.250	<0.250	<0.250	<0.250	<0.250	<0.250	<0.250	<0.250	<0.250	<0.250	<0.250	<0.250	<0.250	<0.250	<0.250	<0.250
Zinc	<0.100	<0.100	<0.100	<0.100	<0.100	<0.100	<0.100	<0.100	<0.100	<0.100	<0.100	<0.100	<0.100	<0.100	<0.100	<0.100	<0.100
TDS	607	404	430	667	527	59	24	16	44	36	6,870	5,870	4,600	3,430	5,192	246	90
TSS	<5.0	<5.0	<5.0	<5.0	<5.0	<5.0	<5.0	<5.0	<5.0	<5.0	<5.0	5.0	<5.0	<5.0	<5.0	<5.0	<5.0
TOC	<10.0	<10.0	<10.0	<10.0	<10.0	<10.0	<10.0	<10.0	<10.0	<10.0	103.0	<10.0	47.7	<10.0	<42.7	<10.0	<10.0
O&G	<5.00	<5.00	<5.00	<5.00	<5.00	<5.00	<5.00	<5.00	<5.00	<5.00	<5.00	<5.00	<5.00	<5.00	<5.00	<5.00	<5.00
Chloride	13.9	13.5	12.0	36.0	18.8	<1.00	<1.00	<1.00	<1.00	<1.00	276	359	229	244	277	17.8	<1.00
Fluoride [1]	1.06	0.713	0.784	0.734	0.80	0.961	<0.200	0.220	<0.200	<0.395	16.4	12.4	13.0	8.5	12.6	1.5	<0.200
Nitrate as N	4.9	4.9	4.27	4.26	4.6	1.79	1.80	1.65	<1.0	<1.56	76.9	100.0	61.9	42.6	70.4	2.13	<1.0
Sulfate [1]	178	90.8	123	191	145.7	<1.00	<1.00	<1.00	<1.00	<1.00	3,090	2,420	2,220	1,480	2,302	93.9	<1.00
Sulfide	<0.500	<0.500	<0.500	<0.500	<0.500	<0.500	<0.500	<0.500	<0.500	<0.500	<0.500	<0.500	<0.500	<0.500	<0.500	<0.500	<0.500
Total Alkalinity	189	151	151	104	149	58.3	24.1	15.2	21.9	29.9	363	574	121	96.5	288.6	46	<1.00
Total Cyanide	<0.005	<0.005	0.0122	<0.005	<0.007	<0.005	<0.005	<0.005	<0.005	<0.005	0.121	0.0078	0.076	0.0894	0.074	0.0212	<0.005
Dissolved Silica	4.00	<1.0	4.39	4.77	<3.54	<1.0	<1.0	<1.0	<1.0	<1.0	40.3	46.4	39.1	34.7	40.1	5.73	<1.0

NOTE: All measurements are in mg/L.

[1] This data is an estimate only, due to a wide range of accuracy used by the lab

Table 4. Summary of Analytical Results – HEROÔ

4.2 Process Measurements

Certain process measurements were taken on a daily basis during verification testing. These data have been consolidated and are summarized in **Table 5**. Aqueous temperature and pH measurements were taken using a hand-held digital thermometer/pH meter. Aqueous flow rates were scheduled to be measured using a portable ultrasonic flow meter. However, due to the configuration of the wastewater piping inside the HERO™ pilot trailer, measurements with the portable device were not possible. Flow measurements were recorded from the in-pipe pulse flowmeters integral to the Hydrometrics HERO™ pilot trailer. Specific conductivity was measured using a Wheatstone Bridge-Type hand-held instrument, and total residual chlorine was measured using a field DPD-Colorimetric reagent meter.

	Day	Temperature (°C)	pH	Flow Rate (gpm)	Specific Conductivity (µS/cm)	Total Residual Chlorine (mg/L)
HERO™ IN	1	30.5	11.07	18.0	1,323	0.01
	2	31.4	10.59	17.9	876	<0.01
	3	30.1	11.11	17.9	1,041	0.02
	4	29.4	11.09	16.7	1,224	0.03
	Avg.	30.4	11.97	17.6	1,116	<0.02
HERO™ EFF	1	32.0	10.43	17.4	218	0.02
	2	31.4	10.08	16.5	124	0.01
	3	31.0	10.41	16.9	142	0.01
	4	30.0	10.11	15.7	83	0.01
	Avg.	31.1	10.26	16.6	142	0.01
RO Waste	1	32.7	9.40	0.82	8,620	0.01
	2	32.3	10.09	1.06	7,450	0.03
	3	31.6	10.62	1.3	7,273	<0.01
	4	31.1	10.80	2.4	3,120	<0.01
	Avg.	31.9	10.23	1.4	6,616	<0.02
WAC IN	1	32.3	10.48	15 (mL/min)	942	<0.01
	2	29.5	10.04	16 (mL/min)	916	<0.01
	3	28.5	10.08	15 (mL/min)	900	<0.01
	4	26.7	9.75	17 (mL/min)	850	<0.01
	Avg.	29.3	10.09	15.75 (mL/min)	902	<0.01
WAC EFF	1	33.8	10.49	15 (mL/min)	953	0.02
	2	29.1	10.09	16 (mL/min)	924	<0.01
	3	27.9	10.11	15 (mL/min)	934	<0.01
	4	25.9	9.88	17 (mL/min)	876	<0.01
	Avg.	29.2	10.14	15.75 (mL/min)	922	<0.01
STD	-	32.5	7.83	-	441	2.14
FB	-	23.0	5.39	-	0.70	<0.01

Table 5. Summary of Process Measurements

Membrane flux is calculated as the gal of permeate product per square foot of membrane per day (gfd). Increasing the flux results in lower capital costs and better effluent quality.

The HERO™ system reduces membrane fouling from scale, organics, and microbial growth by processing the wastewater at a high pH after metals removal. The HERO™ pilot system used for the verification test contains 1,468 ft^2 of membrane surface area. Membrane flux observed during the verification test was calculated to be 17.7 gfd (based on a 24-hour day). Compared to the accepted industry average membrane flux of 11 gfd [Ref. 3], this is 1.6 times better than the average traditional RO membrane flux.

The target wastewater flow rate range specified by Hydrometrics for the KCP's HERO™ system was 18 gpm. The target flow rate for the separate, bench-scale copper recovery WAC ion exchange unit was 15 mL/min. During operation of the system, operators adjusted the flow rates of the HERO™ and copper recovery WAC units within the recommended operating limits.

4.3 Wastewater Processing Data

Spent rinse water from the cyanide oxidation, chromium reduction, acid and caustic rinse water, and other finishing rinse water (aqueous degreasing, cleaning, and rinsing) are pumped at a rate of approximately 170 gpm into the conventional wastewater treatment system. According to a compilation of last years KCP historical records, an average of 86,000 gal of combined wastewater is treated by the KCP's conventional wastewater treatment system during the single 10-hour operating shift. The wastewater breakdown treated in the traditional KCP system during the verification test period is summarized in **Table 6**.

Test Day	Wastewater Type	Gal Processed
1	Chromium	12,000
	Acid/Caustic	23,000
	Dilute Industrial	38,000
	Subtotal	**73,000**
2	Acid/Caustic	34,000
	Dilute Industrial	133,000
	Subtotal	**167,000**
3	Chromium	15,000
	Dilute Industrial	104,000
	Subtotal	**119,000**
4	Cyanide	4,000
	Acid/Caustic	51,000
	Subtotal	**55,000**
Test Period Total		***414,000***

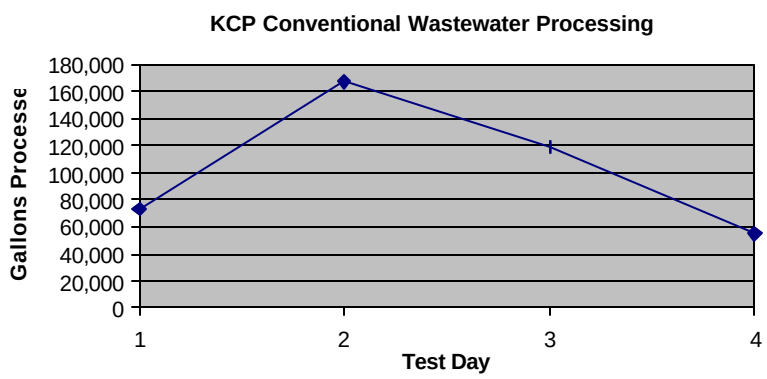

Table 6. KCP Conventional Wastewater Processing

The Hydrometrics HERO™ system processed a portion of the total KCP wastewater after it was processed by the conventional treatment system. While the KCP conventional wastewater treatment system processed approximately 170 gpm, the HERO™ system processed wastewater at approximately 17.6 gpm. A total of 33,286 gal of wastewater was treated during the verification test. The wastewater treated in the HERO™ system during the verification test period is summarized in **Table 7**.

Test Day	HERO™ Influent	HERO™ Effluent
1	8,640	8,352
2	8,861	8,168
3	7,518	7,098
4	8,267	7,772
AVG	**8,322**	**7,848**
TOTAL	***33,286***	***31,390***

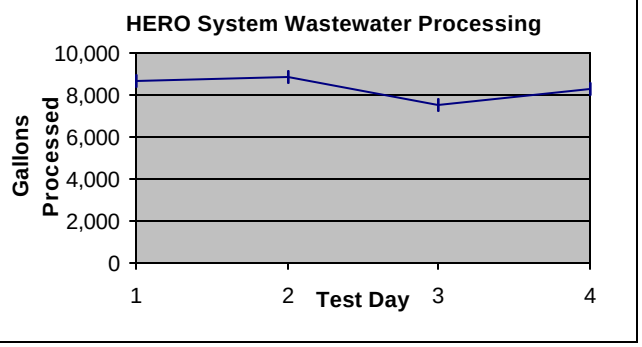

Table 7. HEROÔ System Wastewater Processing

4.4 Other Data

Other data collected during the course of the verification test are summarized in **Table 8**.

Description	Value
Cost of NaOH (25 percent)	$0.047/pound (lb.)
NaOH used during verification test (25 percent)	8.9 gal
Estimated* normalized cost of NaOH (25 percent)	$.2632/10,000 gal treated
Cost of NaCl (100 percent)	$0.035/ lb.
Estimated* normalized cost of NaCl (100 percent)	$1.47/10,000 gal treated
Cost of HCL (31.5 percent)	$0.042/gal
Estimated* normalized cost of HCL (100percent)	$0.8946/10,000 gal treated
Estimated* normalized cost of replacement RO membrane	$1.00/10,000 gal
Electricity by cost	$0.03816/kWh
Estimated* normalized power cost for HERO™ system	$1.40/10,000 gal treated
Total conventionally treated KCP wastewater during test	414,000 gal
Normalized cost of sewer disposal of KCP wastewater	$14.70/10,000 gal
Normalized cost of raw tap water at KCP	$16.70/10,000 gal
Labor cost (loaded rate)	$32.00/hr
KCP IWPF operating schedule	10 hrs./day, 7 days/week
Estimated* cost of full-scale 86,400 gpd HERO™ system	$216,000
Estimated* installation cost of full-scale HERO™ system	$54,000

*Estimates provided by Hydrometrics, Inc.

Table 8. Other Data Collected During Verification

5.0 EVALUATION OF RESULTS

5.1 Wastewater & Copper Recovery

The main purpose of the HERO™ system is to recover the post-conventionally-treated KCP wastewater for in-facility recycling. Recycled water from the HERO™ system must meet the minimum quality standards equal to the Kansas City tap water that the KCP metal finishing operations utilize. Recovery of this wastewater is calculated by a

relationship between the HERO™ system influent, effluent, and waste generation. The wastewater recovery is calculated and recorded by a chart recorder on the main control panel of the HERO™ system. The chart recorder's value was transcribed to the HERO™ system operator's daily checklist several times each day of the verification test.

The separate copper recovery WAC ion unit was sampled once each day of the verification test and analyzed for copper concentrations in the unit's influent and effluent. The ratio of these two analytical results yields the copper recovery efficiency of the WAC ion exchange unit. The equation for the copper recovery calculation is shown below. The recovery efficiency for the wastewater was calculated using a similar equation.

$$Cu_{re}\ (\%) = [[(Cu_{in} \times IN_{vol}) - (Cu_{eff} \times EFF_{vol})] / (Cu_{in} \times IN_{vol})] \times 100\%$$

where:

Cu_{re} = copper recovery efficiency
Cu_{in} = influent solution Cu concentration (mg/L)
IN_{vol} = influent solution volume processed during the cycle (L)
Cu_{eff} = effluent stream copper concentration (mg/L)
EFF_{vol} = effluent volume collected during the cycle (L)

The water & copper recovery efficiencies are shown in **Table 9**.

Test Day	Wastewater Recovery (%)	Copper Recovery (%)
1	96.7	46.6
2	92.2	25.6
3	94.4	39.1
4	94.0	51.3
AVG	***94.3***	***40.6***
Std. Dev.	**1.8**	**11.2**

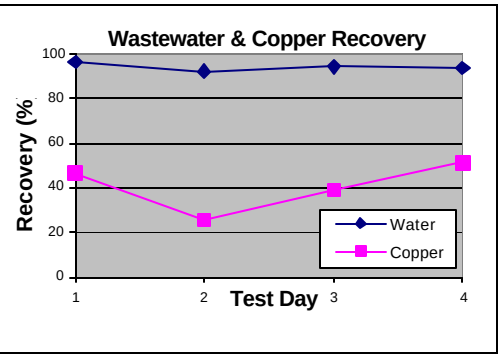

Table 9. Wastewater & Copper Recovery Efficiency

The average recovery percentage for the wastewater was high (94.3 percent), indicating that the HERO™ system was very efficient in recovering water for reuse within the facility. Copper recovery percentages from the separate WAC ion exchange unit were less pronounced (40.6 percent), showing that the HERO™ system did a fair job of recovering copper for resale or reuse. The relatively low concentration of copper in the influent could have had an effect on the copper recovery efficiency.

5.2 Contaminant Removal Efficiency

Since the wastewater that the HERO™ system processes has already been run through the KCP's traditional wastewater treatment process, the water already meets sewer discharge

limits. Parameters such as barium, copper, iron, magnesium, molybdenum, nickel, chloride, sulfate, fluoride, cyanide, and dissolved silica were present in the HERO™ influent, but were at or below regulatory levels for sewer discharge. All of these parameters were virtually reduced to non-detectable levels by the HERO™ system. Also in the HERO™ system influent were calcium, sodium, TDS, nitrate (as N), and total alkalinity; these were within regulatory limits for discharge, but were preventing the post-conventionally-treated wastewater from meeting the KCP water quality recycle standards. The HERO™ system reduced all of these parameters below the acceptable limits, making the water acceptable for recycle within the KCP facility. The contaminant removal efficiencies were calculated for these primary contaminants of the post-conventionally-treated wastewater. The equation for TDS removal efficiency is shown below. Calcium, sodium, nitrate, and total alkalinity removal efficiencies were calculated using similar equations.

$$TDS_{re}\ (\%) = [[(TDS_{in} \times IN_{vol}) - (TDS_{eff} \times EFF_{vol})] / (TDS_{in} \times IN_{vol})] \times 100\%$$

where:

TDS_{re}	=	TDS removal efficiency
TDS_{in}	=	influent solution TDS concentration (mg/L)
IN_{vol}	=	influent solution volume processed during the cycle (L)
TDS_{eff}	=	effluent stream TDS concentration (mg/L)
EFF_{vol}	=	effluent volume collected during the cycle (L)

The contaminant removal efficiencies for these key parameters are shown in **Table 10**.

	Test Day					
Parameter	**1**	**2**	**3**	**4**	**AVG**	**Std. Dev.**
Calcium – IN	131	88.7	105	124	**112.2**	
Calcium – EFF	0.121	0.172	0.227	0.217	**0.2**	
Calcium Recycle Std.	31.8	31.8	31.8	31.8	**31.8**	
Removal Efficiency	*99.9 %*	*99.8 %*	*99.8 %*	*99.8 %*	***99.8 %***	**0.05**
Sodium – IN	60.9	40.9	42.9	80.3	**56.2**	
Sodium – EFF	19.1	11.2	7.0	8.7	**11.5**	
Sodium Recycle Std.	31.6	31.6	31.6	31.6	**31.6**	
Removal Efficiency	*69.7 %*	*74.8 %*	*84.6 %*	*89.8 %*	***79.7 %***	**9.13**
Nitrate (as N) – IN	4.9	4.9	4.27	4.26	**4.6**	
Nitrate (as N) – EFF	1.79	1.80	1.65	<1.0*	**<1.56**	
Nitrate (as N) Recycle Std.	2.13	2.13	2.13	2.13	**2.13**	
Removal Efficiency	*64.7 %*	*66.1 %*	*63.5 %*	*>77.9 %*	***>68.0 %***	**6.65**
Total Alk. – IN	189	151	151	104	**149**	
Total Alk. – EFF	58.3	24.1	15.2	21.9	**29.9**	
Total Alk. Recycle Std.	46	46	46	46	**46**	
Removal Efficiency	*70.2 %*	*85.3 %*	*90.5 %*	*80.2 %*	***81.6 %***	**8.66**
TDS – IN	607	404	430	667	**527**	
TDS – EFF	59	24	16	44	**36**	
TDS Recycle Std.	246	246	246	246	**246**	
Removal Efficiency	*90.6 %*	*94.5 %*	*96.5 %*	*93.8 %*	***93.8 %***	**2.45**

*Post-HERO™ treatment nitrate (as N) level was below laboratory MRL
NOTE: Parameter measurements are in mg/L unless noted otherwise

Table 10. Contaminant Removal Efficiency

5.3 Mass Balance

Mass balance calculations were performed to evaluate how effectively the sampling and analytical procedures account for certain key parameters. The equation for mass balance uses the equation for recovery efficiency (section 5.1) and adds a calculated term for the quantity of material contained in the RO waste stream at the end of the verification test. A calculated result of 100 percent indicates that the quantity of a particular parameter found in the wastewater influent (IN) is fully accounted for in the effluent (EFF) and RO waste (Waste). Mass balance values were calculated for the following key parameters: calcium, sodium, nitrate (as N), total alkalinity, and TDS. The mass balance equation for TDS is shown below. The mass balances for the other constituents were calculated using similar equations.

$$\text{mass bal. (\%)} = [[(TDS_{eff} \times EFF_{vol}) + (TDS_{waste} \times Waste_{vol})] / (TDS_{in} \times IN_{vol})] \times 100\%$$

where:

TDS_{eff}	=	effluent stream TDS concentration (mg/L)
EFF_{vol}	=	effluent volume collected during the cycle (L)
TDS_{waste}	=	RO waste stream TDS concentration (mg/L)
$Waste_{vol}$	=	waste stream volume (L)
TDS_{in}	=	influent solution TDS concentration (mg/L)
IN_{vol}	=	influent solution volume processed during the cycle (L)

The mass balance results are shown in **Table 11**.

Test Day	Calcium (%)	Sodium (%)	Nitrate (as N) (%)	Total Alkalinity (%)	TDS (%)
1	0.4	162.1	106.9	38.6	61.0
2	1.6	25.3	154.8	37.2	91.6
3	23.4	15.4	141.8	15.3	81.2
4	34.7	10.2	165.8	33.1	80.1
AVG	***15.0***	***53.2***	***142.3***	***31.0***	***78.5***
Std. Dev.	**16.8**	**72.8**	**25.6**	**10.8**	**12.8**

Table 11. Mass Balance Results

The average mass balance result for TDS (78.5 percent) is within the acceptable percentage error of +/- 25, indicating that quantities of this parameter found in the influent (IN) are accounted for in the effluent (EFF) and RO waste (Waste) samples. The results for calcium, sodium, nitrate (as N), and total alkalinity were not within the acceptable percentage error. Primarily, these results can be attributed to the several steps of the HERO™ system that remove these types of contaminants during the normal operation of the equipment. The HERO™ system prefilter traps solids entrained in the wastewater. The HERO™ system's pretreatment SAC and WAC ion exchange units remove hardness and convert certain alkalinity compounds to carbon dioxide, which are then typically removed from the wastewater in the membrane degasifier. Since (1) the prefilters were not collected and sampled, (2) the SAC unit was only regenerated once during the test (right after the second day's sampling occurred), and (3) the WAC unit was not regenerated at all during the verification test period, much of the missing mass could be accounted for within these process vessels.

5.4 Energy Use

Energy requirements for operating the HERO™ pilot unit at the KCP included electricity for the four liquid feed pumps (HERO™ feed, pre-RO booster, RO feed pump, and RO booster pump). Electricity use was also estimated by Hydrometrics for HERO™ system instrumentation, compressed air and reagent feed pumps at 12.0 kWh/10,000 gal of

treated wastewater. Electricity for the pilot trailer lighting and air conditioning was not included in the HERO™ system energy use calculations.

Liquid transfer pump electricity use was calculated by dividing the total horsepower (HP) of all system pumps (26.5) by 1.341 HP-hr/kWh. The result is 197.6 kWh/day, based on 10 hours per day (the standard operating time of the KCP wastewater treatment plant). Using this figure, and the amount of wastewater typically processed through the wastewater treatment plant (86,000 gpd), an electricity/processed wastewater ratio of 24.7 kWh/10,000 gal of treated wastewater was calculated, for an overall consumption of 36.7 kWh/10,000 gal of treated wastewater.

5.5 Operating and Maintenance Labor Analysis

Hydrometrics personnel operated the HERO™ pilot system during verification testing. The HERO™ system requires an operator during startup and shutdown. The startup and shutdown procedures are summarized in the test plan [Ref. 1]. During operation, the system is self-regulating; however, for testing purposes, a Hydrometrics operator was on-site at all times during the HERO™ system operation. The operational tasks performed by the Hydrometrics operator during the verification test period included:

- Daily inspections of the unit
- Recording of system parameters
- Filter change-outs
- Minor adjustments
- Chemical additions

Estimates by Hydrometrics and validation of the operating tasks listed above indicate that for a full-scale 86,400 gpd HERO™ system, approximately seven hours of operating & maintenance (O&M) labor each week would be required.

5.6 Chemical Use Analysis

Chemical additions to the HERO™ system typically include water softener salt (NaCl) to the SAC regeneration tank, hydrochloric acid (HCl) to backwash the WAC ion exchange unit, sulfuric acid (H_2SO_4) between the WAC ion exchange and membrane degasifier steps to lower the pH to 4.5 for complete carbon dioxide conversion in the degasifier unit, and sodium hydroxide (NaOH) between the membrane degasifier and RO steps in order to raise the pH to 10 to avoid bio-fouling and silica scaling, and enhance silt rejection.

Due to the SAC unit being out of commission for the first half of the test, the membrane degasifier unit being out of operation the entire test, and the WAC unit not requiring regeneration during the test, the only chemical additions made during the test were the NaOH additions for pH adjustment to 10 prior to entering the RO step. A total of 8.9 gal of NaOH was added to the water over the four-day verification test period. However, this is an increased NaOH dosage due to the SAC unit being out of service during the first portion of the verification test. For actual NaOH, NaCl, HCl, and H_2SO_4 chemical usage

rates, Hydrometrics historical data was utilized. Estimates by Hydrometrics were determined, and normalized to treat 10,000 gal of wastewater similar in composition to the KCP's waste stream. H_2SO_4 was not required for the KCP's wastewater, since it already had a pH below 4.5 upon exiting the WAC step of the HERO™ system. Results for NaOH (25 percent), NaCl (100 percent) and HCL (31.5 percent) usage were calculated to be 5.6 lbs., 42 lbs., and 21.3 lbs. respectively. These numbers were utilized in the full-scale cost estimates and payback period calculation described in section 5.8.

Due to the small process scale, the chemical use for regeneration of the bench-scale copper recovery WAC ion exchange unit used during the KCP verification test was deemed insignificant. Thus, a resin regeneration and subsequent chemical use analysis was not conducted for the copper recovery process.

5.7 Waste Generation Analysis

A waste generation analysis was performed using operational data collected during the verification test period, and historical records from the KCP and Hydrometrics. The HERO™ system generates waste from several of its process steps, and combines them in a single waste stream. The most notable of these process streams is the RO reject waste solution. This is generated on a continual basis as the wastewater passes through the RO pressure vessels. During the verification test, approximately 2,653 gal of RO waste was generated while treating 33,286 gal of wastewater. This equates to an average of about one gal of waste for every 12.6 gal of wastewater treated, or a waste stream volume of 8 percent of the feed volume.

Implementation of the HERO™ system to recondition the wastewater for potential reuse within the KCP would eliminate the discharge of an average of 86,000 gpd of wastewater to the sanitary sewer. However, some of this waste reduction will be offset by the RO waste solution and WAC ion exchange backwash waste generated by the HERO™ system. Since the WAC ion exchange system was not backwashed during the verification test period, a theoretical extrapolation had to be considered. Calculations by Hydrometrics determined a WAC regeneration waste solution creation rate of approximately one gal for every 128.5 gal of wastewater processed, or a waste stream volume of 0.8 percent of the feed volume. Analytical characterization of this waste stream was not possible, but historical records of the HERO's™ WAC regeneration waste solution for similar wastewaters indicate that a standard dischargeable water-softener-like regeneration solution would be generated.

Waste from the pretreatment of the KCP wastewater, which is necessary to achieve the proper hardness-to-alkalinity ratio before entering the HERO™ system, consisted of backwash and rinse water from the multimedia filters and the SAC ion exchange unit. Since the SAC ion exchange unit was not in operation the first two days of the verification test, actual waste volumes were not obtainable during the test period. Hydrometrics has provided an estimate of approximately one gal of combined pretreatment waste for every 41.3 gal of wastewater processed, or a waste stream volume of 2.4 percent of the feed volume.

The combined HERO™ system waste stream would be a brine solution with a high hardness count, consisting primarily of sodium sulfate, but it may also contain heavy metals, suspended solids, O&G, biological materials, and other organic materials that have been removed from the wastewater. Hydrometrics claims that it is generally suitable for direct discharge to the sanitary sewer. Analytical testing of the RO waste portion of the combined waste stream, along with historical information regarding the WAC regeneration waste, supports this claim. The cumulative waste generation rate from the HERO™ system for the verification test was approximately one gal for every 8.93 gal of wastewater processed, for an overall sanitary sewer discharge waste reduction of 89 percent.

The WAC regeneration waste is generated in a batch mode, as the WAC resin becomes clogged with hardness and scale. However, for demonstration purposes, the WAC regeneration waste is reported as a normalized, per-gal waste in **Table 12**, and the results are summarized as well.

Test Day	Wastewater Processed (gallons)	Pretreatment Wastes (Multimedia & SAC) (gallons)	WAC Regeneration Waste (gallons)	RO Waste (gallons)	Total Waste Generation (gallons)
1	8,640	209*	69*	394	672
2	8,861	215*	71*	525	811
3	7,518	182*	60*	546	788
4	8,267	200*	66*	1,188	1,454
AVG	*8,322*	*202**	*66**	*663*	*931*
Total	**33,286**	**806***	**266***	**2,653**	**3,725**

*Estimates based on historical data and calculations provided by Hydrometrics, Inc.

Table 12. Results of Waste Generation Analysis

5.8 Cost Analysis

The estimated capital cost (2001) of a HERO™ system able to process the KCP average of 86,400 gpd of industrial wastewater, operating 24 hours per day, is $270,000 (includes $216,000 for the HERO™ system and $54,000 for installation costs).

Annual costs and savings associated with the high-pH RO wastewater treatment system are shown in **Table 13.** Since some cost items are normalized to the treated wastewater as measured in gal processed, and the workload varies from year to year, the figures in the table are based on a projected 31,390,000 gal of wastewater treated in a year (average 86,000/day, 365 days/year). The total average annual operating costs of the HERO™ system are approximately $38,499. The average sewage disposal costs at the KCP without the HERO™ system are typically $3,845/month (based on 86,000 gpd), and fresh water costs average $4,368/month (also based on 86,000 gpd), for a total average annual cost of $98,564. Therefore, use of the HERO™ system results in an estimated net annual

savings of $60,065. The simple payback period is 4.5 years (capital cost/net annual savings).

The payback period at other facilities may vary depending on water and wastewater disposal cost. By achieving high water recovery, the approximate 5 percent reject (waste) stream can be more cost-effectively evaporated to assist in becoming a zero liquid discharge facility, if appropriate. At some facilities, it may be appropriate to treat dilute wastewater before clarification, thereby reducing clarifier costs. Also, the high-purity, low-hardness water used for recycle may improve the performance of cooling towers and other operations.

	Without HEROô System			**With HEROô System**		
Item	**Units**	**Unit Cost $/unit**	**Costs/yr $**	**Units**	**Unit Cost $/unit**	**Costs/yr $**
HERO™ system O&M labor (see section 5.5)	0	N/A	0	365 hrs	32.00	11,680
NaCl additions (see section 5.6)	0	N/A	0	131,838 lbs	0.035	4,614
HCl (31.5%) additions (see section 5.6)	0	N/A	0	66,861 lbs	0.042	2,808
NaOH (25%) additions (see section 5.6)	0	N/A	0	17,578 lbs	0.047	826
RO membrane replacement	0	N/A	0	1,695 ft^2 of membrane	1.85	3,136
Electricity for HERO™ system (see section 5.4)	0	N/A	0	115,201 kWh	0.03816	4,396
Sewer disposal fees (see section 5.8)	31,390,000 gal	0.00147	46,143	3,515,680 gal	0.00147	5,168
Fresh water purchase costs (see section 5.8)	31,390,000 gal	0.00167	52,421	3,515,680 gal	0.00167	5,871
Total Costs			**98,564**			**38,499**

Table 13. Annual Costs/Savings

5.9 Project Responsibilities/Audits

Verification testing activities and sample analysis were performed according to section 6.0 of the verification test plan [Ref. 1].

In order to assess data quality, a single factor analysis of variance was performed on the laboratory results for total dissolved solids, total alkalinity, and nitrate concentration. The hypothesis tested was to determine for each analyte whether the influent concentrations were not in the same population as the effluent concentrations. For the number of samples, the minimum F value for 99 percent confidence was 13.75. The computed F value for TDS was 56.04; for alkalinity, 35.68; and for nitrates, 129.68. This means that, with over 99 percent confidence, the difference in the average concentration of these three analytes between the influent and effluent is due to the HERO™ technology.

There was a verification test audit conducted during the verification period for this technology. The audit was an external EPA Technical Systems Audit (TSA) conducted by a subcontractor, David Gratson of Neptune and Company, Inc., on July 24 & 25, 2001. There were no Findings, five Observations, and no Additional Technical Comments. All corrective actions were completed as instructed in the audit report issued by Mr. Gratson.

6.0 REFERENCES

1. Concurrent Technologies Corporation, "*Environmental Technology Verification Program for Metal Finishing Pollution Prevention Technologies Verification Test Plan, Evaluation of Hydrometrics, Inc. High Efficiency Reverse Osmosis (HERO®) Industrial Wastewater Treatment System*," June 15, 2001.

2. Concurrent Technologies Corporation, "*Environmental Technology Verification Program Metal Finishing Technologies Quality Management Plan*," Revision 1 – March 26, 2001.

3. Hydranautics, "*ROdesign7 – Comprehensive Reverse Osmosis Software Design Package.*" Version 7.0 – Copyright 2000.

APPENDIX A

PRECISION CALCULATIONS

PRECISION CALCULATIONS

Laboratory ID	*CTC* ID	Parameter	Units	Sample Value	Duplicate Value	RPD %	RPD % Limits	RPD Met Y/N
604477893	0724A	Mercury	mg/L	<0.0002	<0.0002	0	<30	Y
604476069	0724A	Aluminum	mg/L	<0.075	<0.075	0	<30	Y
604476069	0724A	Arsenic	mg/L	<0.085	<0.085	0	<30	Y
604476069	0724A	Barium	mg/L	0.0268	0.0265	1	<30	Y
604476069	0724A	Cadmium	mg/L	<0.005	<0.005	0	<30	Y
604476069	0724A	Calcium	mg/L	131.0	133.0	1	<30	Y
604476069	0724A	Chromium	mg/L	<0.007	<0.007	0	<30	Y
604476069	0724A	Copper	mg/L	<0.01	<0.01	0	<30	Y
604476069	0724A	Iron	mg/L	<0.04	<0.04	0	<30	Y
604476069	0724A	Lead	mg/L	<0.05	<0.05	0	<30	Y
604476069	0724A	Magnesium	mg/L	<0.05	<0.05	0	<30	Y
604476069	0724A	Manganese	mg/L	<0.007	<0.007	0	<30	Y
604476069	0724A	Molybdenum	mg/L	0.203	0.206	2	<30	Y
604476069	0724A	Nickel	mg/L	<0.03	<0.03	0	<30	Y
604476069	0724A	Silver	mg/L	<0.007	<0.007	0	<30	Y
604476069	0724A	Sodium	mg/L	60.9	62.4	2	<30	Y
604476069	0724A	Zinc	mg/L	<0.1	<0.1	0	<30	Y
604476069	0724A	Tin	mg/L	<0.25	<0.25	0	<30	Y
604477406	0724A	TDS	mg/L	607	598	1	<30	Y
604484758	0724A	Dissolved Silica	mg/L	4.00	4.96	21	<30	Y
604498097	0724A	O&G	mg/L	<5.0	<5.0	0	<30	Y
604476747	0724A	TOC	mg/L	<10.0	<10.0	0	<30	Y
604480301	0724A	Total Alk.	mg/L	189	244	25	<30	Y
604475996/604476002	0724A	Chloride	mg/L	37.15	37.43	1	<30	Y
604475996/604476002	0724A	Fluoride	mg/L	2.749	2.771	1	<30	Y [1]
604475996/604476002	0724A	Nitrate as N	mg/L	7.909	7.893	0	<30	Y
604475996/604476002	0724A	Sulfate	mg/L	209.9	210.6	0	<30	Y [1]
604484360/604484378	0724A	Cyanide	mg/L	0.0816	0.0821	1	<30	Y
604461863	Batch	Cyanide	mg/L	<0.005	<0.005	0	<30	Y
604474429	0724B	Chloride	mg/L	<1.0	<1.0	0	<30	Y
604474429	0724B	Fluoride	mg/L	0.961	0.920	4	<30	Y [1]
604474429	0724B	Nitrate as N	mg/L	1.79	1.79	0	<30	Y
604474429	0724B	Sulfate	mg/L	<1.0	<1.0	0	<30	Y [1]
604474304	0725A	Mercury	mg/L	<0.0002	<0.0002	0	<30	Y
604475541	0725A	Aluminum	mg/L	<0.075	<0.075	0	<30	Y
604475541	0725A	Arsenic	mg/L	<0.085	<0.085	0	<30	Y
604475541	0725A	Barium	mg/L	0.0187	0.0181	3	<30	Y
604475541	0725A	Cadmium	mg/L	<0.005	<0.005	0	<30	Y
604475541	0725A	Calcium	mg/L	88.7	85.7	3	<30	Y
604475541	0725A	Chromium	mg/L	<0.007	<0.007	0	<30	Y
604475541	0725A	Copper	mg/L	<0.01	<0.01	0	<30	Y
604475541	0725A	Iron	mg/L	<0.04	<0.04	0	<30	Y
604475541	0725A	Lead	mg/L	<0.05	<0.05	0	<30	Y
604475541	0725A	Magnesium	mg/L	0.186	0.178	4	<30	Y
604475541	0725A	Manganese	mg/L	<0.007	<0.007	0	<30	Y
604475541	0725A	Molybdenum	mg/L	0.447	0.420	6	<30	Y
604475541	0725A	Nickel	mg/L	0.0322	0.0303	6	<30	Y
604475541	0725A	Silver	mg/L	<0.007	<0.007	0	<30	Y
604475541	0725A	Sodium	mg/L	40.9	37.5	9	<30	Y
604475541	0725A	Zinc	mg/L	<0.1	<0.1	0	<30	Y
604475541	0725A	Tin	mg/L	<0.25	<0.25	0	<30	Y
604474387	0725A	Sulfide	mg/L	<0.5	<0.5	0	<30	Y
604474346	0725A	TDS	mg/L	404	384	5	<30	Y
604498113	0725A	O&G	mg/L	<5.0	<5.0	0	<30	Y

Laboratory ID	*CTC* ID	Parameter	Units	Sample Value	Duplicate Value	RPD %	RPD % Limits	RPD Met Y/N
604474361	0725A	TSS	mg/L	<5.0	<5.0	0	<30	Y
604484790	0725A	Dissolved Silica	mg/L	<1.0	1.72	172 [2]	<30	N
604474874	0725A	TOC	mg/L	<10.0	<10.0	0	<30	Y
604489963	0725A	Total Alk.	mg/L	151	150	1	<30	Y
604474437/604474445	0725A	Chloride	mg/L	35.03	34.85	1	<30	Y
604474437/604474445	0725A	Fluoride	mg/L	2.330	2.308	1	<30	Y [1]
604474437/604474445	0725A	Nitrate as N	mg/L	8.618	8.563	1	<30	Y
604474437/604474445	0725A	Sulfate	mg/L	128.7	127.9	1	<30	Y [1]
604484220/604484238	0725A	Cyanide	mg/L	0.0986	0.0944	4	<30	Y
604473975	0725B	Cyanide	mg/L	<0.005	<0.005	0	<30	Y
604480863	0726A	Mercury	mg/L	<0.0002	<0.0002	0	<30	Y
604475582	0726A	Aluminum	mg/L	<0.075	<0.075	0	<30	Y
604475582	0726A	Arsenic	mg/L	<0.085	<0.085	0	<30	Y
604475582	0726A	Barium	mg/L	0.0226	0.0239	5	<30	Y
604475582	0726A	Cadmium	mg/L	<0.005	<0.005	0	<30	Y
604475582	0726A	Calcium	mg/L	105	108	3	<30	Y
604475582	0726A	Chromium	mg/L	<0.007	<0.007	0	<30	Y
604475582	0726A	Copper	mg/L	<0.01	<0.01	0	<30	Y
604475582	0726A	Iron	mg/L	0.045	<0.04	11	<30	Y
604475582	0726A	Lead	mg/L	<0.05	<0.05	0	<30	Y
604475582	0726A	Magnesium	mg/L	0.175	0.194	10	<30	Y
604475582	0726A	Manganese	mg/L	<0.007	<0.007	0	<30	Y
604475582	0726A	Molybdenum	mg/L	0.193	0.193	0	<30	Y
604475582	0726A	Nickel	mg/L	<0.03	<0.03	0	<30	Y
604475582	0726A	Silver	mg/L	<0.007	<0.007	0	<30	Y
604475582	0726A	Sodium	mg/L	42.9	41.3	4	<30	Y
604475582	0726A	Zinc	mg/L	<0.1	<0.1	0	<30	Y
604475582	0726A	Tin	mg/L	<0.25	<0.25	0	<30	Y
604475244	0726A	Sulfide	mg/L	<0.5	<0.5	0	<30	Y
604475137	0726A	TDS	mg/L	430	404	6	<30	Y
604475178	0726A	TSS	mg/L	<5.0	<5.0	0	<30	Y
604487488	0726A	Dissolved Silica	mg/L	4.39	4.87	12	<30	Y
604498139	0726A	O&G	mg/L	<5.0	<5.0	0	<30	Y
604476853	0726A	TOC	mg/L	<10.0	<10.0	0	<30	Y
604489971	0726A	Total Alk.	mg/L	151	145	4	<30	Y
604475483/604475491	0726A	Chloride	mg/L	35.58	35.33	1	<30	Y
604475483/604475491	0726A	Fluoride	mg/L	2.607	2.604	0	<30	Y [1]
604475483/604475491	0726A	Nitrate as N	mg/L	8.299	8.268	0	<30	Y
604475483/604475491	0726A	Sulfate	mg/L	165.0	164.6	0	<30	Y [1]
604484279/604484287	0726A	Cyanide	mg/L	0.0984	0.0862	13	<30	Y
604484295	Batch	Cyanide	mg/L	<0.005	<0.005	0	<30	Y
604480889	0727A	Mercury	mg/L	<0.0002	<0.0002	0	<30	Y
604481002	0727A	Aluminum	mg/L	<0.075	<0.075	0	<30	Y
604481002	0727A	Arsenic	mg/L	<0.085	<0.085	0	<30	Y
604481002	0727A	Barium	mg/L	0.0248	0.0229	8	<30	Y
604481002	0727A	Cadmium	mg/L	<0.005	<0.005	0	<30	Y
604481002	0727A	Calcium	mg/L	124	122	2	<30	Y
604481002	0727A	Chromium	mg/L	<0.007	<0.007	0	<30	Y
604481002	0727A	Copper	mg/L	0.0453	0.0440	3	<30	Y
604481002	0727A	Iron	mg/L	<0.04	<0.04	0	<30	Y
604481002	0727A	Lead	mg/L	<0.05	<0.05	0	<30	Y
604481002	0727A	Magnesium	mg/L	<0.05	<0.05	0	<30	Y
604481002	0727A	Manganese	mg/L	<0.007	<0.007	0	<30	Y
604481002	0727A	Molybdenum	mg/L	0.166	0.161	3	<30	Y
604481002	0727A	Nickel	mg/L	<0.03	<0.03	0	<30	Y

Laboratory ID	*CTC* ID	Parameter	Units	Sample Value	Duplicate Value	RPD %	RPD % Limits	RPD Met Y/N
604481002	0727A	Silver	mg/L	<0.007	<0.007	0	<30	Y
604481002	0727A	Sodium	mg/L	80.3	75.5	6	<30	Y
604481002	0727A	Zinc	mg/L	<0.1	<0.1	0	<30	Y
604481002	0727A	Tin	mg/L	<0.25	<0.25	0	<30	Y
604483818	0727A	Sulfide	mg/L	<0.5	<0.5	0	<30	Y
604479154	0727A	TDS	mg/L	667	646	3	<30	Y
604479170	0727A	TSS	mg/L	<5.0	<5.0	0	<30	Y
604487504	0727A	Dissolved Silica	mg/L	4.77	7.66	46 [2]	<30	N
604498170	0727A	O&G	mg/L	<5.0	<5.0	0	<30	Y
604490482	0727A	TOC	mg/L	<10.0	<10.0	0	<30	Y
604489989	0727A	Total Alk.	mg/L	104.0	98.7	5	<30	Y
604480541/604480558	0727A	Chloride	mg/L	56.16	56.40	0	<30	Y
604480541/604480558	0727A	Fluoride	mg/L	2.679	2.683	0	<30	Y [1]
604480541/604480558	0727A	Nitrate as N	mg/L	8.578	8.582	0	<30	Y
604480541/604480558	0727A	Sulfate	mg/L	224	225	0	<30	Y [1]
604480533	Batch	Chloride	mg/L	95.7	95.4	0	<30	Y
604480533	Batch	Fluoride	mg/L	<0.2	<0.2	0	<30	Y [1]
604480533	Batch	Nitrate as N	mg/L	2.08	2.08	0	<30	Y
604480533	Batch	Sulfate	mg/L	177	176	0	<30	Y [1]
604484311/604484329	0727A	Cyanide	mg/L	0.0576	0.0822	35 [2]	<30	N
604484337	0727B	Cyanide	mg/L	<0.005	<0.005	0	<30	Y
604498782	0727FB	Total Alk.	mg/L	<1.0	<1.0	0	<30	Y

[1] This data is an estimate only, due to a wide range of accuracy used by the lab.

[2] The spike recovery was outside acceptable limits for the Matrix Spike due to matrix interference. The Laboratory Control Sample (LCS) was within acceptable limits showing that the laboratory was in control, and the data is acceptable.

APPENDIX B

ACCURACY CALCULATIONS

ACCURACY CALCULATIONS

CTC SAMPLE ID	Parameter	Units	Sample Value	Sample +Spike Value	Spike Value	Recovery %	Target % Recovery	Accuracy Met Y/N
0724A	Mercury	mg/L	0.00001481	0.009567	0.010000	96	70-130	Y
0724A	Aluminum	mg/L	0	8.919	10.000	89	70-130	Y
0724A	Arsenic	mg/L	0	0.9431	1.0000	94	70-130	Y
0724A	Barium	mg/L	0.02678	0.9245	1.0000	90	70-130	Y
0724A	Cadmium	mg/L	0.000049	0.09366	0.10000	94	70-130	Y
0724A	Calcium	mg/L	130.9	138.1	10.0	72	70-130	Y
0724A	Chromium	mg/L	0.002328	0.938600	1.000000	94	70-130	Y
0724A	Copper	mg/L	0.005523	0.955400	1.000000	95	70-130	Y
0724A	Iron	mg/L	0.02527	9.27300	10.00000	92	70-130	Y
0724A	Lead	mg/L	0.001357	0.890500	1.000000	89	70-130	Y
0724A	Magnesium	mg/L	0.03130	9.04700	10.00000	90	70-130	Y
0724A	Manganese	mg/L	0.000747	0.930300	1.000000	93	70-130	Y
0724A	Molybdenum	mg/L	0.2028	1.1110	1.0000	91	70-130	Y
0724A	Nickel	mg/L	0.01577	0.96300	1.00000	95	70-130	Y
0724A	Silver	mg/L	0.004051	0.099430	0.100000	95	70-130	Y
0724A	Sodium	mg/L	60.930	70.870	10.000	99	70-130	Y
0724A	Zinc	mg/L	0.009784	0.917500	1.000000	91	70-130	Y
0724A	Tin	mg/L	0.009942	8.915000	10.000000	89	70-130	Y
0724A	Dissolved Silica	mg/L	4.004	14.980	10.000	110	70-130	Y
0724A	O&G	mg/L	0.8889	26.2500	40.0000	63	61-127	Y
0724A	TOC	mg/L	7.53	12.54	5.00	100	70-130	Y
0724A	Chloride	mg/L	13.90	37.15	25.00	93	70-130	Y
0724A	Fluoride	mg/L	1.057	2.749	2.500	68	16-178	Y [1]
0724A	Nitrate as N	mg/L	4.903	7.909	5.000	60 [2]	70-130	N
0724A	Sulfate	mg/L	178.4	209.9	50.0	63	10-170	Y [1]
0724A	Cyanide	mg/L	0.0044	0.0816	0.1000	77	61-113	Y
0725A	Mercury	mg/L	0.00000679	0.009087	0.0100000	91	70-130	Y
0725A	Aluminum	mg/L	0	9.314	10.000	93	70-130	Y
0725A	Arsenic	mg/L	0	0.9426	1.0000	94	70-130	Y
0725A	Barium	mg/L	0.01869	0.9711	1.0000	95	70-130	Y
0725A	Cadmium	mg/L	0.000049	0.09716	0.10000	97	70-130	Y
0725A	Calcium	mg/L	88.72	95.27	10.00	66 [2]	70-130	N
0725A	Chromium	mg/L	0.000694	0.979400	1.000000	98	70-130	Y
0725A	Copper	mg/L	0.0033	0.9856	1.0000	98	70-130	Y
0725A	Iron	mg/L	0.03174	9.51200	10.00000	95	70-130	Y
0725A	Lead	mg/L	0.000591	0.872400	1.000000	87	70-130	Y
0725A	Magnesium	mg/L	0.1857	9.6280	10.0000	94	70-130	Y
0725A	Manganese	mg/L	0.000612	0.973900	1.000000	97	70-130	Y
0725A	Molybdenum	mg/L	0.4471	1.3950	1.0000	95	70-130	Y
0725A	Nickel	mg/L	0.03224	1.02000	1.00000	99	70-130	Y
0725A	Silver	mg/L	0.001981	0.100500	0.100000	98	70-130	Y
0725A	Sodium	mg/L	40.90	49.55	10.00	87	70-130	Y
0725A	Zinc	mg/L	0.01489	0.96330	1.00000	95	70-130	Y
0725A	Tin	mg/L	0.02525	9.41800	10.00000	94	70-130	Y
0725A	Dissolved Silica	mg/L	0.899	12.850	10.000	120	70-130	Y
0725A	O&G	mg/L	1.222	39.470	40.000	96	61-127	Y
0725A	TOC	mg/L	3.18	8.69	5.00	110	70-130	Y
0725A	Chloride	mg/L	13.47	35.03	25.00	86	70-130	Y
0725A	Fluoride	mg/L	0.7134	2.3300	2.5000	65	16-178	Y [1]
0725A	Nitrate as N	mg/L	4.901	8.618	5.000	74	70-130	Y
0725A	Sulfate	mg/L	90.77	128.70	50.00	76	10-170	Y [1]
0725A	Cyanide	mg/L	0	0.0986	0.1000	94	61-113	Y
0726A	Mercury	mg/L	0	0.009588	0.010000	96	70-130	Y

CTC SAMPLE ID	Parameter	Units	Sample Value	Sample +Spike Value	Spike Value	Recovery %	Target % Recovery	Accuracy Met Y/N
0726A	Aluminum	mg/L	0	9.442	10.000	94	70-130	Y
0726A	Arsenic	mg/L	0	0.9805	1.0000	98	70-130	Y
0726A	Barium	mg/L	0.02264	1.01600	1.00000	99	70-130	Y
0726A	Cadmium	mg/L	0	0.0989	0.1000	99	70-130	Y
0726A	Calcium	mg/L	105.0	114.7	10.0	97	70-130	Y
0726A	Chromium	mg/L	0.003091	1.004000	1.000000	100	70-130	Y
0726A	Copper	mg/L	0.003477	1.01400	1.00000	101	70-130	Y
0726A	Iron	mg/L	0.04496	9.96900	10.00000	99	70-130	Y
0726A	Lead	mg/L	0	0.899	1.000	90	70-130	Y
0726A	Magnesium	mg/L	0.1751	9.8460	10.0000	97	70-130	Y
0726A	Manganese	mg/L	0.000639	0.997400	1.000000	100	70-130	Y
0726A	Molybdenum	mg/L	0.1928	1.1560	1.0000	96	70-130	Y
0726A	Nickel	mg/L	0.01037	1.02300	1.00000	101	70-130	Y
0726A	Silver	mg/L	0.001676	0.102800	0.100000	101	70-130	Y
0726A	Sodium	mg/L	42.91	50.61	10.00	77	70-130	Y
0726A	Zinc	mg/L	0.01334	0.98010	1.00000	97	70-130	Y
0726A	Tin	mg/L	0.01929	9.59600	10.00000	96	70-130	Y
0726A	Dissolved Silica	mg/L	4.389	14.300	10.000	99	70-130	Y
0726A	O&G	mg/L	0.6667	30.3300	40.0000	74	61-127	Y
0726A	TOC	mg/L	3.19	7.85	5.00	93	70-130	Y
0726A	Chloride	mg/L	12.04	35.58	25.00	94	70-130	Y
0726A	Fluoride	mg/L	0.7839	2.6070	2.5000	73	16-178	Y [1]
0726A	Nitrate as N	mg/L	4.267	8.299	5.000	81	70-130	Y
0726A	Sulfate	mg/L	123.1	165.0	50.0	84	10-170	Y [1]
0726A	Cyanide	mg/L	0.01224	0.09840	0.10000	86	61-113	Y
0727A	Mercury	mg/L	0	0.009754	0.010000	98	70-130	Y
0727A	Aluminum	mg/L	0	9.129	10.000	91	70-130	Y
0727A	Arsenic	mg/L	0	0.9624	1.0000	96	70-130	Y
0727A	Barium	mg/L	0.02475	0.98560	1.00000	96	70-130	Y
0727A	Cadmium	mg/L	0.000593	0.095080	0.100000	94	70-130	Y
0727A	Calcium	mg/L	124.5	135.0	10.0	105	70-130	Y
0727A	Chromium	mg/L	0.001789	0.961400	1.000000	96	70-130	Y
0727A	Copper	mg/L	0.0453	1.0140	1.0000	97	70-130	Y
0727A	Iron	mg/L	0.01767	9.84200	10.00000	98	70-130	Y
0727A	Lead	mg/L	0.002909	0.869800	1.000000	87	70-130	Y
0727A	Magnesium	mg/L	0	9.296	10.000	93	70-130	Y
0727A	Manganese	mg/L	0.000439	0.952700	1.000000	95	70-130	Y
0727A	Molybdenum	mg/L	0.1661	1.0950	1.0000	93	70-130	Y
0727A	Nickel	mg/L	0.01299	0.98250	1.00000	97	70-130	Y
0727A	Silver	mg/L	0.00308	0.10320	0.10000	100	70-130	Y
0727A	Sodium	mg/L	80.31	88.90	10.00	86	70-130	Y
0727A	Zinc	mg/L	0.004257	0.929300	1.000000	92	70-130	Y
0727A	Tin	mg/L	0.2069	9.6060	10.0000	96	70-130	Y
0727A	Dissolved Silica	mg/L	4.77	15.58	10.00	108	70-130	Y
0727A	O&G	mg/L	0.9091	26.4200	40.0000	64	61-127	Y
0727A	TOC	mg/L	6.31	12.28	5.00	119	70-130	Y
0727A	Chloride	mg/L	36.04	56.16	25.00	80	70-130	Y
0727A	Fluoride	mg/L	0.7343	2.6790	2.5000	78	16-178	Y [1]
0727A	Nitrate as N	mg/L	4.257	8.578	5.000	86	70-130	Y
0727A	Sulfate	mg/L	190.7	224.0	50.0	67	10-170	Y [1]
0727A	Cyanide	mg/L	0	0.0576	0.1000	58 [2]	61-113	N

[1] This data is an estimate only, due to a wide range of accuracy used by the lab.

[2] The spike recovery was outside acceptable limits for the Matrix Spike due to matrix interference. The Laboratory Control Sample (LCS) was within acceptable limits showing that the laboratory was in control, and the data is acceptable.

APPENDIX C

REPRESENTATIVENESS CALCULATIONS

REPRESENTATIVENESS CALCULATIONS

CTC ID SAMPLE ➔	0724A – HERO® IN			0724B – HERO® EFF			0725D – RO Waste			0726E – Cu Recovery WAC IN			0726F – Cu Recovery WAC EFF		
PARAMETER ➔	*Result*	*Dup. Result*	*% Diff.*	*Result*	*Dup. Result*	*% Diff.*	*Result*	*Dup. Result*	*% Diff.*	*Result*	*Dup. Result*	*% Diff.*	*Result*	*Dup. Result*	*% Diff.*
Mercury (µg/L)	<0.200	<0.200	0.0	<0.200	<0.200	0.0	<0.200	<0.200	0.0	-	-	-	-	-	-
Aluminum (µg/L)	<75.0	<75.0	0.0	<75.0	<75.0	0.0	435	458	5.2	-	-	-	-	-	-
Arsenic (µg/L)	<85.0	<85.0	0.0	<85.0	<85.0	0.0	<85.0	<85.0	0.0	-	-	-	-	-	-
Barium (µg/L)	26.8	25.7	4.2	<4.0	<4.0	0.0	17.9	19.7	9.6	-	-	-	-	-	-
Cadmium (µg/L)	<5.0	<5.0	0.0	<5.0	<5.0	0.0	<5.0	<5.0	0.0	-	-	-	-	-	-
Calcium (µg/L)	131000	129000	1.5	121	114	6.0	21500	21800	1.4	-	-	-	-	-	-
Chromium (µg/L)	<7.0	<7.0	0.0	<7.0	<7.0	0.0	21.8	22.3	2.3	-	-	-	-	-	-
Copper (µg/L)	<10.0	<10.0	0.0	<10.0	<10.0	0.0	25.0	26.1	4.3	486	504	3.6	296	295	0.3
Iron (µg/L)	<40.0	48.7	19.6	<40.0	<40.0	0.0	<40.0	52.9	27.8	-	-	-	-	-	-
Lead (µg/L)	<50.0	<50.0	0.0	<50.0	<50.0	0.0	<50.0	<50.0	0.0	-	-	-	-	-	-
Magnesium (µg/L)	<50.0	<50.0	0.0	<50.0	<50.0	0.0	<50.0	<50.0	0.0	-	-	-	-	-	-
Manganese (µg/L)	<7.0	<7.0	0.0	<7.0	<7.0	0.0	<7.0	<7.0	0.0	-	-	-	-	-	-
Molybdenum (µg/L)	203	205	1.0	<20.0	<20.0	0.0	9790	10100	3.1	-	-	-	-	-	-
Nickel (µg/L)	<30.0	<30.0	0.0	<30.0	<30.0	0.0	239	244	2.1	-	-	-	-	-	-
Silver (µg/L)	<7.0	<7.0	0.0	<7.0	<7.0	0.0	11.4	12.3	7.6	-	-	-	-	-	-
Sodium (µg/L)	60900	59800	1.8	19100	19000	0.5	<150	<150	0.0	-	-	-	-	-	-
Zinc (µg/L)	<100	<100	0.0	<100	<100	0.0	<100	<100	0.0	-	-	-	-	-	-
Tin (µg/L)	<250	<250	0.0	<250	<250	0.0	<250	<250	0.0	-	-	-	-	-	-
Sulfide (mg/L)	<0.500	<0.500	0.0	<0.500	<0.500	0.0	<0.500	<0.500	0.0	-	-	-	-	-	-
TDS (mg/L)	607	610	0.5	59.0	56.0	5.2	5870	5950	1.4	-	-	-	-	-	-
TSS (mg/L)	<5.0	<5.0	0.0	<5.0	<5.0	0.0	5.00	<5.00	0.0	-	-	-	-	-	-
Diss. Silica (mg/L)	4.00	4.58	13.5	<1.0	<1.0	0.0	46.4	37.6	21.0	-	-	-	-	-	-
O&G (mg/L)	<5.0	<5.0	0.0	<5.0	<5.0	0.0	<5.0	<5.0	0.0	-	-	-	-	-	-
Chloride (mg/L)	13.9	13.9	0.0	<1.0	<1.0	0.0	359	355	1.1	-	-	-	-	-	-
Fluoride (mg/L)	1.06	1.06	0.0	0.961	0.513	60.8	12.4	12.3	0.8	-	-	-	-	-	-
Nitrate as N (mg/L)	4.90	4.91	0.2	1.79	1.79	0.0	100	99.8	0.2	-	-	-	-	-	-
Sulfate (mg/L)	178	180	1.1	<1.0	6.33	145.4	2420	2390	1.2	-	-	-	-	-	-
TOC (mg/L)	<10.0	<10.0	0.0	<10.0	<10.0	0.0	<10.0	<10.0	0.0	-	-	-	-	-	-
Total Alk. (mg/L)	189	156	19.1	58.3	58.3	0.0	574	586	2.1	-	-	-	-	-	-
Cyanide (mg/L)	<0.005	<0.005	0.0	<0.005	<0.005	0.0	0.0078	0.014	56.9	-	-	-	-	-	-