December 2004

Environmental Technology Verification Report

ENVIRONICS USA INC.
M90-D1-C CHEMICAL WARFARE AGENT DETECTOR

Prepared by
Battelle

Battelle
The Business of Innovation

Under a contract with

EPA U.S. Environmental Protection Agency

ETV ETV ETV

December 2004

Environmental Technology Verification Report

ETV Safe Buildings Monitoring and Detection Technology Verification Program

Environics USA Inc. M90-D1-C Chemical Warfare Agent Detector

by

Kent Hofacre
Tricia Derringer
Dale Folsom
Thomas Kelly
Loraine Sinnott
Zachary Willenberg

Battelle
Columbus, Ohio 43201

Notice

The U.S. Environmental Protection Agency (EPA), through its Office of Research and Development, has financially supported and collaborated in the extramural program described here. This document has been peer reviewed by the Agency. Mention of trade names or commercial products does not constitute endorsement or recommendation by the EPA for use.

Foreword

The U.S. Environmental Protection Agency (EPA) is charged by Congress with protecting the nation's air, water, and land resources. Under a mandate of national environmental laws, the Agency strives to formulate and implement actions leading to a compatible balance between human activities and the ability of natural systems to support and nurture life. To meet this mandate, the EPA's Office of Research and Development provides data and science support that can be used to solve environmental problems and to build the scientific knowledge base needed to manage our ecological resources wisely, to understand how pollutants affect our health, and to prevent or reduce environmental risks. EPA also addresses responsibilities in homeland security through the National Homeland Security Research Center, by means of research programs in Drinking Water Security, Safe Buildings, and Rapid Risk Assessment.

The Environmental Technology Verification (ETV) Program has been established by the EPA to verify the performance characteristics of innovative environmental technology across all media and to report this objective information to permitters, buyers, and users of the technology, thus substantially accelerating the entrance of new environmental technologies into the marketplace. Verification organizations oversee and report verification activities based on testing and quality assurance protocols developed with input from major stakeholders and customer groups associated with the technology area. ETV consists of six verification centers. Information about each of these centers can be found on the Internet at http://www.epa.gov/etv.

The ETV approach has also been applied to verification of homeland security technologies. The verification reported herein was conducted by Battelle as part of the Safe Buildings Monitoring and Detection Technology Verification Program, which is funded by EPA. Information concerning this specific environmental technology area can be found on the Internet at http://www.epa.gov/etv/centers/center11.html.

Acknowledgments

The authors wish to acknowledge the support of all those who helped plan and conduct the verification test, analyze the data, and prepare this report. We also would like to thank Donald Stedman of the University of Denver and Bernadette Johnson of the Massachusetts Institute of Technology for their reviews of this report.

Contents

Page

Notice ii

Foreword iii

Acknowledgments iv

List of Abbreviations viii

1 Background 1

2 Technology Description 2

3 Test Design and Procedures 4
- 3.1 Introduction 4
- 3.2 Test Design 5
  - 3.2.1 Chemical Test Compounds 5
  - 3.2.2 Test Matrix 5
  - 3.2.3 Test Locations 6
  - 3.2.4 Test Sequence and Schedule 7
  - 3.2.5 Reference Methods 7
  - 3.2.6 Interferents 9
  - 3.2.7 Materials and Equipment 11
- 3.3 Test Procedure 14
  - 3.3.1 Response Time 15
  - 3.3.2 Recovery Time 16
  - 3.3.3 Accuracy 16
  - 3.3.4 Repeatability 16
  - 3.3.5 Response Threshold 16
  - 3.3.6 Temperature and Humidity Effects 17
  - 3.3.7 Interference Effects 17
  - 3.3.8 Cold-/Hot-Start Behavior 18
  - 3.3.9 Battery Life 18
  - 3.3.10 Operational Characteristics 18

4 Quality Assurance/Quality Control 20
- 4.1 Equipment Calibration 20
  - 4.1.1 Reference Methods 20
  - 4.1.2 Instrument Checks 21

4.2 Audits 21
4.2.1 Performance Evaluation Audit 21
4.2.2 Technical Systems Audit 21
4.2.3 Data Quality Audit 22
4.3 QA/QC Reporting 22

5 Statistical Methods 23
5.1 Statistical Analyses 23
5.1.1 Analysis of Response, Response Time, and Recovery Time 24
5.1.2 Analysis of Accuracy 25
5.1.3 Analysis of Repeatability 25
5.1.4 False Negatives and Positives Analysis 26
5.1.5 Analysis of Response to Oscillating Concentrations 26
5.2 Other Analyses 27

6 Test Results 28
6.1 Response Time 29
6.2 Recovery Time 30
6.3 Accuracy 30
6.4 Repeatability 31
6.5 Response Threshold 31
6.6 Temperature and Humidity Effects 32
6.7 Interference Effects 32
6.8 Cold-/Hot-Start Behavior 33
6.9 Battery Life 34
6.10 Operational Characteristics 34

7 Performance Summary 36

8 References 38

Appendix A. Detailed Statistical Analysis Results

Figures

Figure 2-1. Environics USA M90-D1-C CW Agent Detector 2

Figure 3-1. Planned Sequence of TIC Verification Tests 8

Figure 3-2. Logic Diagram for Determining TIC/CW Agent Test Sequence 9

Figure 3-3. Test System Schematic 13

Tables

Table 3-1. Target TIC and CW Agent Challenge Concentrations 5

Table 3-2 Summary of Evaluations Conducted on the M90-D1-C 6

Table 3-3. Test Schedule 9

Table 3-4. Primary Reference Methods 9

Table 3-5. Test Concentrations for Interferents 10

Table 3-6. Temperature and Relative Humidity Conditions 12

Table 4-1. Performance Evaluation Audit Results 21

Table 6-1. GB Test Results 29

Table 6-2. Response Threshold Data 31

Table 6-3. Interference Effects Data 32

List of Abbreviations

AC	hydrogen cyanide
CW	chemical warfare
DEAE	N,N-diethylaminoethanol
EPA	U.S. Environmental Protection Agency
ETV	Environmental Technology Verification
FID	flame ionization detection
FPD	flame photometric detection
GB	sarin
GC	gas chromatography
HD	sulfur mustard
HMRC	Hazardous Materials Research Center
IDLH	immediately dangerous to life and health
IMS	ion mobility spectrometer(ry)
L	liter
L/min	liter per minute
LCD	liquid crystal display
$\mu g/m^3$	microgram per cubic meter
µL	microliter
mg/m^3	milligrams per cubic meter
mL	milliliter
mm	millimeter
PE	performance evaluation
ppb	part per billion
ppm	parts per million
ppmC	parts per million of carbon
psig	pounds per square inch gauge
QA	quality assurance
QC	quality control
QMP	quality management plan
RH	relative humidity
THC	total hydrocarbon
TIC	toxic industrial chemical
TSA	technical systems audit
VOC	volatile organic compound

Chapter 1
Background

The U.S. Environmental Protection Agency (EPA) supports the Environmental Technology Verification (ETV) Program to facilitate the deployment of innovative environmental technologies through performance verification and dissemination of information. The goal of the ETV Program is to further environmental protection by accelerating the acceptance and use of improved and cost-effective technologies. ETV seeks to achieve this goal by providing high-quality, peer-reviewed data on technology performance to those involved in the design, distribution, financing, permitting, purchase, and use of environmental technologies.

ETV works in partnership with recognized testing organizations; with stakeholder groups consisting of buyers, vendor organizations, and permitters; and with the full participation of individual technology developers. The program evaluates the performance of innovative technologies by developing test plans that are responsive to the needs of stakeholders, conducting field or laboratory tests (as appropriate), collecting and analyzing data, and preparing peer-reviewed reports. All evaluations are conducted in accordance with rigorous quality assurance (QA) protocols to ensure that data of known and adequate quality are generated and that the results are defensible.

Subsequent to the terrorist attacks of September 11, 2001, this ETV approach has been applied to verify the performance of homeland security technologies. Monitoring and detection technologies for the protection of public buildings and other public spaces fall within the Safe Buildings Monitoring and Detection Technology Verification Program, which is funded by EPA and conducted by Battelle. In this program, Battelle recently evaluated the performance of the Environics USA Inc. M90-D1-C chemical warfare (CW) agent detector.

Chapter 2
Technology Description

The objective of the ETV Safe Buildings Monitoring and Detection Technology Verification Program is to verify the performance characteristics of monitoring technologies for chemical and/or biological contaminants that might be introduced into the building environment. This verification report provides results for the verification testing of the M90-D1-C CW agent detector. Following is a description of the M90-D1-C, based on information provided by the vendor. The information provided below was not subjected to verification in this test.

The M90-D1-C CW agent detector is designed to detect and identify nerve, blister, blood, and choking agents using Environics' patented open-loop ion mobility spectrometry (IMS) technology to provide continuous real-time operation without the need for expendable desiccant cartridges or membranes. The M90-D1-C is fully automatic and provides the operator with audible and visible alarms upon detecting CW agents. The M90-D1-C display identifies the agent class (Nerve, Blister, Blood), indicates the relative agent concentration (Low/Medium/High), and indicates whether the concentration is increasing or decreasing. This alarm information can be provided to a remote computer/control station through the data connector on the M90-D1-C. The M90-D1-C can be upgraded to detect new agents by changing data libraries. It is fully ruggedized to meet appropriate military standards.

Figure 2-1. Environics USA M90-D1-C CW Agent Detector

The M90-D1-C is a multiapplication instrument, capable of operating as a point detector to provide an early warning of approaching toxic chemical gas or as a chemical agent monitor to identify and monitor personnel, vehicles, and equipment for contamination. The M90-D1-C is generally carried by people, but it can be installed on vehicles. It also can be used as a fixed detector, operating without constant supervision. Both local and distant alarms are provided, and the M90-D1-C can be used to automatically trigger closing down ventilation systems to secure buildings and positions from further agent contamination.

The M90-D1-C contains two sensor units: an aspiration-type IMS sensor and a semiconductor sensor. A simulant tube is provided for each sensor to allow performance checks during operation. The M90-D1-C can operate from 115/240 volts alternating current, from batteries, or from vehicle power supplies. It weighs 4.7 kilograms (10 pounds, 6 ounces), and it is 28 centimeters (cm) (11.02 inches) long, 10.5 cm (4.12 inches) wide, and 28 cm (11.02 inches) high. The M90-D1-C is designed to operate in temperatures between -30°C and 55°C (-22°F and 131°F) and at relative humidities up to 99%. The M90-D1-C has a programmed initial startup delay of less than 10 minutes and not less than a 5-minute delay after power is recycled. It comes with a carrying case so that the M90-D1-C can be carried over the shoulder or as a front or rear backpack.

Chapter 3
Test Design and Procedures

3.1 Introduction

When first responders arrive at a potentially contaminated site, they need to immediately and accurately identify chemicals that may be present. Chemicals and chemical agents that may pose a threat in a building could include both toxic industrial chemicals (TICs) and CW agents.

The objective of this verification test of the M90-D1-C, a commercially available CW agent detector, was to evaluate its ability to detect CW agents in indoor air. This verification focused on the scenario of a detector used by first responders to identify contaminants and guide emergency response activities after chemical contamination of a building. This verification was conducted according to a peer-reviewed test/quality assurance (test/QA) plan[1] that was developed according to the requirements of the *Quality Management Plan for the Safe Buildings Monitoring and Detection Technology Verification Program.*[2] The following performance characteristics of the M90-D1-C were evaluated:

- Response time
- Recovery time
- Accuracy
- Repeatability
- Response threshold
- Temperature and humidity effects
- Interference effects
- Cold-/hot-start behavior
- Battery life
- Operational characteristics.

Response time, recovery time, accuracy, and repeatability were evaluated by challenging the M90-D1-C with known vapor concentrations of one target TIC and two CW agents. M90-D1-C performance at low target analyte concentrations was evaluated to assess the response threshold. Similar tests conducted over a range of temperatures and relative humidities (RH) were used to establish the effects of these factors on detection capabilities. The effects of potential interferences in an emergency situation were assessed by sampling those interferences both with and without the target TIC and CW agents present. The M90-D1-C was tested after a cold start (i.e., without the usual warm-up period) both from room temperature and from cold storage conditions, and after hot storage, to evaluate the delay time before readings could be obtained. Battery

life was determined as the time until M90-D1-C performance degraded as battery power was exhausted in continuous operation. Operational factors such as ease of use, data output, and cost were assessed by observations of the test personnel and through inquiries to the vendor. All testing was carried out on a single unit of the M90-D1-C.

Testing was limited to detecting chemicals in the vapor phase because that mode of application is most relevant to use by first responders. Testing was conducted in two phases: detection of one TIC (conducted in a non-surety laboratory at Battelle) and detection of two CW agents (conducted in a certified surety laboratory at Battelle's Hazardous Materials Research Center [HMRC]).

3.2 Test Design

3.2.1 Chemical Test Compounds

Hydrogen cyanide (North Atlantic Treaty Organization designation AC) was the only TIC used in testing, because the vendor indicated prior to the test that this was the only TIC in the M90-D1-C software library. The CW agents used in testing were sarin (GB) (Lot 7852, 85.1% purity) and sulfur mustard (HD) (Lot 7864, 95.8% purity).

Table 3-1 summarizes the concentrations of each TIC and CW agent used in this verification test. For AC, tests were conducted at the immediately-dangerous-to-life-and-health (IDLH) level. For the CW agents GB and HD, testing was conducted at a single concentration level that produced less than full-scale readings on the M90-D1-C under normal temperature and humidity conditions. The concentration used for GB was 0.13 parts per million (ppm) (0.75 milligrams per cubic meter [mg/m^3]), which is approximately four times the IDLH concentration of 0.035 ppm (0.2 mg/m^3). No IDLH level has been set for HD, so the concentration used was based on an alternative toxic effects guideline, as noted in the footnote to Table 3-1.

Table 3-1. Target TIC and CW Agent Challenge Concentrations

Chemical	Challenge Concentrations	Type of Level
AC	50 ppm (50 mg/m^3)	1 x IDLH
GB	0.13 ppm (0.75 mg/m^3)	4 x IDLH
HD	0.63 ppm (4.1 mg/m^3)	7 x AEGL-2[(a)]

[(a)] AEGL = Acute Exposure Guideline Level; AEGL-2 levels are those expected to produce a serious hindrance to efforts to escape in the general population. The AEGL-2 value of 0.09 ppm (0.6 mg/m^3) for HD is based on a 10-minute exposure.

3.2.2 Test Matrix

Table 3-2 summarizes the evaluations that were conducted in the verification test. As Table 3-2 indicates, except for cold-/hot-start behavior, battery life, and assessment of false positive inter-

ference effects (i.e., the interferent alone), all performance parameters were evaluated during both the TIC and CW agent testing.

Table 3-2. Summary of Evaluations Conducted on the M90-D1-C

Performance Parameter	Objective	Comparison Based On
Response Time	Determine rise time of M90-D1-C response	M90-D1-C readings with step rise in analyte concentration
Recovery Time	Determine fall time of M90-D1-C response	M90-D1-C readings with step decrease in analyte concentration
Accuracy	Characterize reliability of M90-D1-C identification of target chemicals	M90-D1-C identifier display
Repeatability	Characterize consistency of M90-D1-C readings with constant analyte concentration	M90-D1-C readings with constant input
Response Threshold	Estimate minimum concentration that produces M90-D1-C response	Reference method results
Temperature and RH Effects	Evaluate effect of temperature and RH on M90-D1-C performance	Repeat above evaluations with different temperature and RH
Interference Effects	Evaluate effect of building contaminants that may interfere with M90-D1-C performance	Sample interferents and target chemicals together (and interferents alone[(a)])
Cold Start	Characterize startup performance after cold storage	Repeat tests with no warm-up[(a)]
Hot Start	Characterize startup performance after hot storage	Repeat tests with no warm-up[(a)]
Battery Operation	Characterize battery life	Observe M90-D1-C duration of operation on batteries[(a)]

[(a)] Indicates this part of the test performed only during TIC testing.

3.2.3 Test Locations

Two laboratories were used to conduct the verification tests. Testing with the non-chemical surety materiel—AC and interferents—was conducted in a laboratory at Battelle's Columbus, Ohio, campus, which has the needed challenge generation, collection, and analysis equipment. This laboratory has been used previously to conduct IMS instrument and filter tests using AC under controlled environmental conditions. Testing with CW agents was conducted at the HMRC at Battelle's West Jefferson, Ohio, campus. Battelle's HMRC is an ISO 9001-certified facility that provides a broad range of materials testing, system and component evaluation, research and development, and analytical chemistry services requiring the safe use and storage of highly toxic substances. Battelle operates the HMRC in compliance with all applicable federal, state, and local laws and regulations, including Army regulations.

3.2.4 Test Sequence and Schedule

The sequence of tests planned to be performed with the TIC (AC) in this study is outlined in Figure 3-1. Since analyzer performance was not known *a priori*, the concentrations used in testing depended on the results of the first few tests performed. The decision logic used to determine the actual TIC concentration and the test sequence is shown in Figure 3-2. A similar, but slightly reduced, set of tests was performed with CW agents. Table 3-3 summarizes the actual schedule of testing for the TIC and CW agents. As described in Chapter 6, only minimal testing was conducted with AC because the M90-D1-C did not respond when challenged with this TIC. A nerve agent simulant was used instead of AC to allow completion of tests such as battery life and cold/hot start behavior.

3.2.5 Reference Methods

Table 3-4 summarizes the primary reference methods used to determine the challenge concentrations of the target TIC and CW agents. Listed in the table are the target TIC and CW agents, the sampling and analysis methods used for each compound, and the applicable concentration range of each method. For AC, low concentration samples were injected directly for determination by gas chromatography (GC) with flame ionization detection (FID). The CW agents GB and HD were collected in gas sample bags, and determined by GC with flame photometric detection (FPD), according to existing HMRC test procedures.

Summaries of these primary methods, and of supplemental methods also used, are as follows.

Hydrogen cyanide (AC)—The reference method for AC was GC/FID, using an Agilent 6890 GC with a capillary column and FID. This GC was positioned next to the laboratory hood containing the test system during the TIC testing and sampled automatically from the flow line delivering the challenge gas to the M90-D1-C.

Sarin (GB) and sulfur mustard (HD)—The analytical method for these CW agents involved collecting the agents by flowing air from the test apparatus into gas sample bags. The agent concentrations then were determined using a capillary GC with FPD. Concentrations were determined based on a linear regression of peak area with the amount of agent.

Total hydrocarbons—A continuous FID was used for the determination of the total hydrocarbon (THC) content of interferent mixtures provided to the M90-D1-C during testing. The THC concentrations characteristic of realistic interferent levels in buildings were determined, either by direct measurement or by interpretation of published data. The interferent delivery systems were then adjusted to achieve the desired THC indication in parts per million of carbon (ppmC) for each interferent during testing.

Test 1: Vapor challenge with TIC Alternating clean air with immediately dangerous to life and health (IDLH) level concentration of TIC five times with M90-D1-C fully warmed up per manufacturer's instructions prior to testing, and room temperature (22 ± 3°C) and 50 ± 5% RH.
Test 2: Vapor challenge with TIC at reduced concentration Test 1 is repeated at a lower concentration giving mid-range on-scale readings (only if off-scale response at IDLH). The concentration that gives a mid-range on-scale reading is then referred to as the target concentration for all subsequent tests.
Test 3: Vapor challenge with TIC at increased concentration Test 1 is repeated at roughly 10 times the IDLH concentration (only if no response at IDLH).
Test 4: Response threshold of TIC Test 1 is repeated at a concentration below IDLH. If a response is recorded, the concentration is cut in half until no response is recorded. If no initial response is recorded, the concentration is increased by a factor of 2 until a response is recorded.
Test 5: Target/low/clean air challenge Test 1 is repeated by alternating target concentrations, a low concentration (either 0.1 IDLH or response threshold concentration) and clean air six times and alternating order of low concentration and target concentration.
Test 6: Vapor challenge with TIC at room temperature, low humidity Test 1 is repeated at room temperature (22 ± 3°C) and less than 20% RH. The test is performed at the concentration determined via the logic in Figure 3-2.
Test 7: Vapor challenge with TIC at room temperature, high humidity Test 1 is repeated at room temperature (22 ± 3°C) and 80% RH. The test is performed at the concentration determined via the logic in Figure 3-2.
Test 8: Vapor challenge with TIC at high temperature, medium humidity Test 1 is repeated at high temperature (35 ± 3°C) and 50% RH. The test is performed at the concentration determined via the logic in Figure 3-2.
Test 9: Vapor challenge with TIC at high temperature, high humidity Test 1 is repeated at high temperature (35 ± 3°C) and 80% RH. The test is performed at the concentration determined via the logic in Figure 3-2.
Test 10: Vapor challenge with TIC at low temperature, medium humidity Test 1 is repeated at low temperature (5 ± 3°C) and 50% RH. The test is performed at the concentration determined via the logic in Figure 3-2.
Test 11: Interferent false positive tests Test 1 is repeated alternating interferent only with clean air. The test is repeated for all interferents.
Test 12: Interferent false negative tests Test 1 is repeated alternating TIC and interferent with clean air. The test is repeated for all interferents.
Test 13: Room temperature, cold start behavior Repeat Test 1 with the M90-D1-C at room temperature for a minimum of 12 hours and no warm-up.
Test 14: Cold-/cold-start behavior Repeat Test 1 after the M90-D1-C has been kept refrigerated (5-8°C) overnight for a minimum of 12 hours, with no warm-up.
Test 15: Hot-/cold-start behavior Repeat Test 1 after the M90-D1-C has been kept heated (40°C) overnight for a minimum of 12 hours, with no cool-down or warm-up.
Test 16: Battery test Repeat Test 1 with the M90-D1-C operating on battery power. The TIC at target concentration is alternated with clean air once every half hour until the unit stops responding or shuts down due to loss of power.

Figure 3-1. Planned Sequence of TIC Verification Tests

Step 1: Perform Test 1. Depending on the results of this test, go to Step 2a, 2b, or 2c as appropriate.
Step 2a: If there is no response in Test 1, perform Test 3, then go to Step 4.
Step 2b: If the response in Test 1 is on scale, skip to Step 3 and perform all subsequent tests at the IDLH concentration.
Step 2c: If the response in Test 1 is off-scale, perform Test 2. Establish the concentration that gives a mid-range on-scale response and proceed with Step 3, using that established concentration in all subsequent tests.
Step 3: Perform Test 4 (if not already done), Tests 5 through 10, and Test 12 at the concentration(s) determined above. For the first TIC, also perform Test 11 and Tests 13 through 16.
Step 4: Repeat Tests 1 through 10 and 12 for all CW agents.

Figure 3-2. Logic Diagram for Determining TIC/CW Agent Test Sequence

Table 3-3. Test Schedule

Chemical	Test Dates (2004)
AC	August 6
Nerve simulant	August 13-24
HD	September 13
GB	September 20 - October 1

Table 3-4. Primary Reference Methods

Analyte	Concentration Range (ppm)	Sampling Method	Analysis Method
AC	0.05 to 100	Air sample injected directly	GC/FID
GB	0.01 to 100	Air sample collected in gas sampling bag	GC/FPD
HD	0.01 to 100	Air sample collected in gas sampling bag	GC/FPD

3.2.6 Interferents

Interferents were selected for testing based upon their prevalence in a building. The interferents selected were the volatile chemicals in latex paint, air freshener, and ammonia-based floor cleaner, as well as gasoline engine exhaust hydrocarbons and N,N-diethylaminoethanol (DEAE). DEAE is a common additive to reduce corrosion in building boiler systems, and is released into the heating, ventilating, and air conditioning system when boiler steam is used to humidify the air. These selected interferents were tested for false positives by exposing the M90-D1-C to

selected levels of the interferents in clean air, to see whether the interferents generated a positive response from the M90-D1-C when no TIC or CW agents were present. Each interferent also was introduced to the M90-D1-C along with each CW agent, to determine false negatives, i.e., whether the interferent prevents the M90-D1-C from indicating that CW agent is present. The following sections describe the materials and concentrations used for testing.

The interferents are mixtures of chemicals and determining the interferent concentration requires the quantification of all the chemicals present. However, monitoring each component would be time and cost prohibitive. For this reason, interferent concentrations were monitored using a THC analyzer. THC analysis is appropriate because all the interferents consist of a significant amount of carbon-containing compounds. Because quantification is based on carbon content, the test concentrations are reported on a per carbon basis in ppmC. The use of the hydrocarbon analyzer also provided real-time continuous monitoring of the interferent concentration during testing.

Test concentrations for the interferents were based on direct measurements or published data. Concentrations found in published data were converted to a per carbon basis as described below. Table 3-5 is a summary of the interferent test concentrations. The following sections contain a detailed description of how the test concentrations were determined.

Table 3-5. Test Concentrations for Interferents

Interferent	Test Concentration (ppmC)
Latex Paint Fumes	5-10
Floor Cleaner Vapors	10
Air Freshener Vapors	1
Gasoline Exhaust Hydrocarbons	2.5
DEAE	0.02

3.2.6.1 Latex Paint Fumes

The appropriate concentrations of latex paint fumes were established directly by measurements in and around a freshly painted office. Samples were obtained using a 25-liter (L) Teflon bag and analyzed for THC content. Each wall in the office was painted, and the room dimensions were 11 feet by 11 feet with an alcove 4 feet by 10 feet and ceiling 12 feet high. Immediately after painting, the hydrocarbon concentration was 170 ppmC. After 2.5 hours, the hydrocarbon concentration in the office fell to 38 ppmC. At this time, the hydrocarbon content was determined just outside the entrance to the office and in the hallway 80 feet away from the office. Hydrocarbon content just outside the office was 20 ppmC; in the hallway 80 feet away from the office, it was 3 ppmC. Based on these measurements, the test concentration was maintained at 5 to 10 ppmC.

3.2.6.2 Floor Cleaner Vapors

The test concentration for the ammonia-based floor cleaner was inferred from the information cited in Section 3.2.6.1 on latex paint fumes. Similar to paint, floor cleaner is applied to a

surface and allowed to dry. Floor cleaner vapors containing both ammonia and fragrances will disperse into the hallway. Because of the similarity, a test concentration of 10 ppmC was used for the floor cleaner.

3.2.6.3 Air Freshener Vapors

Concentration levels of air freshener for interferent testing were based upon values reported at an indoor air quality conference. Volatile organic compound (VOC) emission for a plug-in air freshener was reported to be 30 to 80 milligrams per hour, resulting in a concentration of 300 to 500 micrograms per cubic meter ($\mu g/m^3$) for the average room. Assuming the VOC emitted consists of hydrocarbons similar to limonene, a common fragrance component, the concentration on a per carbon basis can be calculated. Limonene contains 10 carbons and has a molecular weight of 136. A concentration of 5.56 $\mu g/m^3$ of limonene is the same as 1 part per billion (ppb). With a room concentration of 500 $\mu g/m^3$ and limonene as a representative molecule, the fragrance concentration on a per carbon basis is estimated to be 1 ppmC. This THC level was maintained for all tests with the air freshener.

3.2.6.4 Gasoline Engine Exhaust

Of the constituents in gasoline engine exhaust fumes, the aromatic components were considered most likely to interfere with the performance of the M90-D1-C. A recent study reported that urban areas can have benzene concentrations of over 5 ppb with comparable concentrations of other aromatics.[3] The test mixture used to simulate exhaust contains 61 compounds ranging in size from 2 to 10 carbons, with an average concentration of 200 ppb for each component. To obtain a challenge concentration for the aromatic compounds, the test mixture was diluted 30:1. Assuming an average size of six carbons, the THC of the mixture was approximated to be 73 ppmC. After dilution, the THC content was 2.5 ppmC, and this target concentration was maintained for all the experiments.

3.2.6.5 DEAE

DEAE is a common additive to boiler systems to prevent corrosion. When boiler steam is used to humidify the air in a building, DEAE is released into the building as well. Generally, the DEAE concentration is kept below 40 ppb, the threshold for odor detection. One study has shown DEAE concentrations of 1 ppb in a building that uses direct steam injection for humidification.[4] For testing purposes, the concentration was set at 20 ppbC, which correlates to 3.3 ppb DEAE given that DEAE contains six carbons. This concentration was not detectable by THC analysis, so the interferent concentration was set by dilution of a concentrated standard.

3.2.7 Materials and Equipment

3.2.7.1 TIC and CW Agents

The commercial gas standard used as the source of AC for testing was a standard of 10,020 ppm AC in nitrogen (Cylinder B0005506, Scott Specialty Gases). The CW agents GB and HD were

obtained as neat materials from the U.S. Army under Bailment Agreement No. DAAD13-03-H-00-0003.

3.2.7.2 Vapor Delivery Equipment

The compressed gas mixture noted in Section 3.2.7.1 was diluted as the vapor source for AC. A two-way valve was included in the flow path downstream of the vapor generation source, so that the dilution and test equipment could be totally isolated from the source. A schematic diagram of the entire TIC vapor generation, dilution, and delivery system is shown in Figure 3-3. For the CW agents GB and HD, a diffusion cell containing the pure agent was substituted for the gas mixture. A temperature-controlled water bath was installed to control the temperature of the diffusion cell to maintain a stable vapor generation rate.

3.2.7.3 Temperature/Humidity Control

The M90-D1-C was evaluated at the temperature and humidity conditions indicated by an "X" in Table 3-6. Both the delivered air temperature and the M90-D1-C were maintained within the specified temperature range. For testing at 35°C, the vapor delivery system was warmed with a heat-traced line, using an electronic temperature controller. For testing at 5°C, the dilution and delivery system was enclosed in a cooled chamber to provide approximate temperature control. For all tests, thermocouples were installed in both the clean air plenum and the challenge plenum to provide real-time temperature monitoring.

Table 3-6. Temperature and Relative Humidity Conditions

	Temperature (°C)		
RH (%)	**5 ± 3**	**22 ± 3**	**35 ± 3**
≤ 20		X	
50 ± 5	X	X	X
80 ± 5		X	X

A commercial Nafion® humidifier (Perma Pure, Inc.) was used to generate controlled high-humidity air (50 to 100% RH), which was then mixed with dry dilution air and the target vapor stream to obtain the target RH (≤ 20% to 80%) in the challenge air.

3.2.7.4 Interferent Sources

Interference test concentrations were obtained by diluting a concentrated feed with air. For latex paint, floor cleaner, and air freshener, the concentrated feeds were made by purging the head space of a large boiling flask containing about 100 milliliter (mL) of the bulk liquid of each interferent using approximately 0.1 liter per minute (L/min) flow of clean air. THC analysis of the head space samples found that the concentrated feeds contained 394, 886, and 233 ppmC for latex paint, floor cleaner, and air freshener, respectively. Gasoline engine exhaust was simulated using a mixture of 61 organic compounds ranging from 2 to 10 carbon atoms (C_2 to C_{10}). This

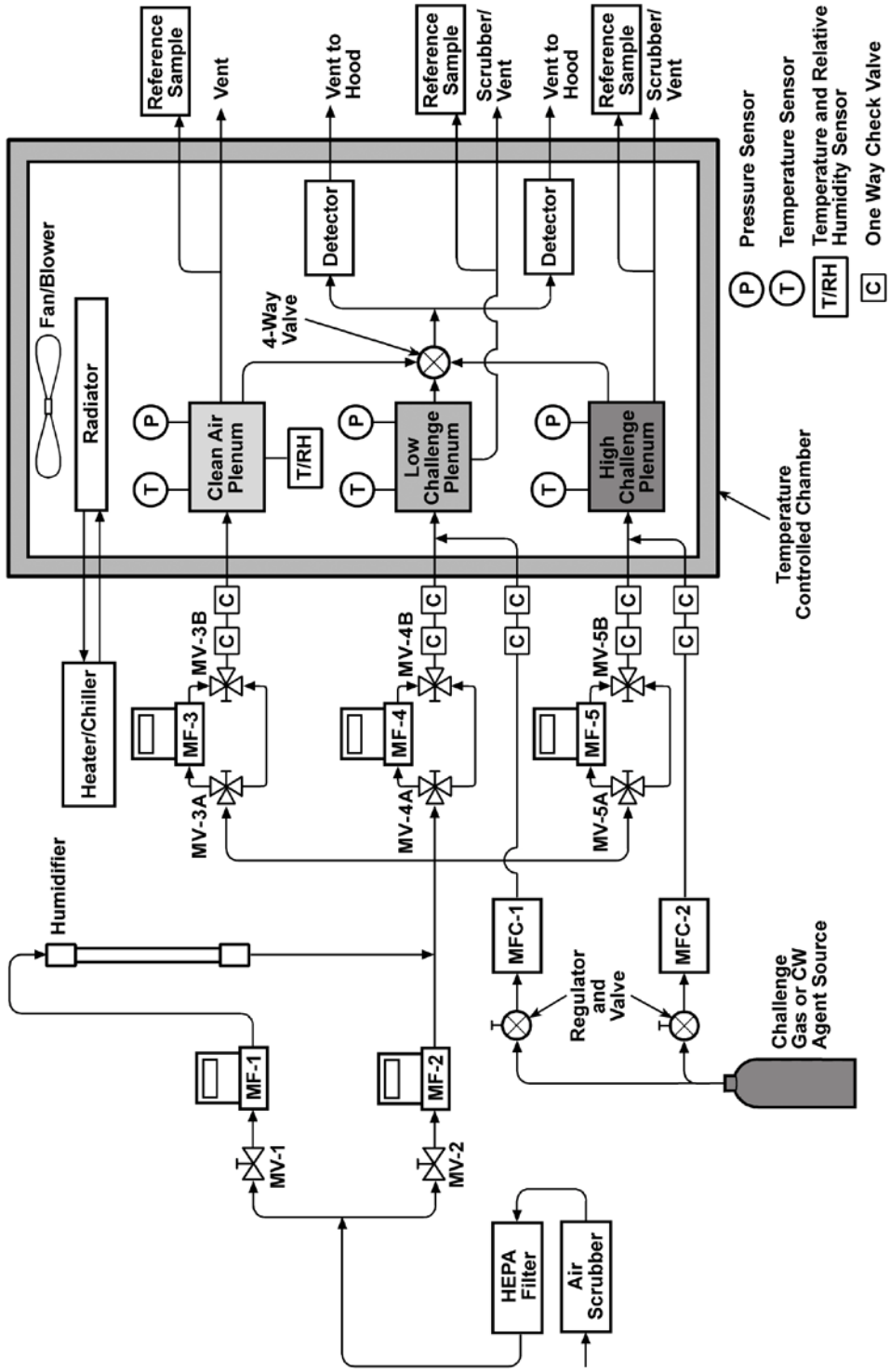

Figure 3-3. Test System Schematic

mixture was prepared by adding 1 microliter (μL) of 51 neat liquid components and 250 μL of 10 gaseous components into a 15.7-L cylinder and diluting to a final pressure of 1,200 pounds per square inch gauge (psig) with nitrogen. A concentrated standard of 1 ppm for DEAE was made by adding zero nitrogen to 6 μL of liquid neat DEAE to a final pressure of 1,200 psig. In all cases these cylinder gases or concentrated vapor streams were diluted to the appropriate level by addition to the large flows of clean air passing through the test apparatus (Figure 3-3).

3.2.7.5 Performance Evaluation Audit Materials

As part of the quality assurance effort in this verification, a performance evaluation (PE) audit was performed on reference methods used to confirm the AC concentration provided to the M90-D1-C. This audit involved conducting analysis on an independent standard, obtained from a different source than that used for the calibration standard, with the two standards diluted identically in the test apparatus. The result from the independent standard was then compared with that from the calibration standard to assess the degree of agreement. The target agreement in the PE audit was within 20% for AC. For AC, the PE audit standard was 10,000 ppm AC in nitrogen (Cylinder LL320) obtained from Linde Gas LLC.

A comparable PE audit could not be done for the CW agents because of the lack of independent standards. In lieu of a PE audit for the CW agents, check samples were prepared at the HMRC by an analyst other than the staff who conducted routine calibration of the reference method. These samples were analyzed by the same approach used for analysis of calibration samples from GB and HD testing, and the results were compared.

3.3 Test Procedure

The test system (Figure 3-3) consisted of a vapor generation system, a Nafion® humidifier, two challenge plenums, a clean air plenum, an RH sensor, thermocouples, and mass flow meters. The challenge vapor or gas was generated by the vapor generation system. The challenge vapor was then mixed with the humid dilution air and flowed into the challenge plenum. Interference vapors were added to the challenge mixtures as needed for testing.

The RH and target concentration of the challenge vapor were obtained by adjusting the mixing ratio of the humid air (from the Nafion® humidifier) to the dry dilution air, and the mixing ratio of the vapor generation stream to the humid dilution air, respectively. To avoid potential corrosion or malfunction of the RH sensor from exposure to the challenge vapor, the RH meter was installed upstream of the inlet of the vapor stream. The RH of the challenge vapor stream was calculated based on the measured RH of the humid dilution air and the mixing ratio of the vapor generation stream to the humid dilution air.

To establish the baseline reading of the M90-D1-C, a clean air plenum was used. Part of the humid dilution air was introduced directly into the clean air plenum. When establishing the M90-D1-C background, the four-way valve connected to the M90-D1-C was switched to the clean air plenum to collect baseline data.

After the baseline measurement, the four-way valve connected to the M90-D1-C was switched to one of the challenge plenums to allow the M90-D1-C to sample the challenge mixture. Switching between the challenge and clean air plenums was rapid, and the residence time of gas in the test system was short to allow determination of the response and recovery times of the M90-D1-C. The reference methods described in Section 3.2.5 were used to confirm that the concentration in the challenge plenums was within ± 20% of the target level for AC (or within 35% of the target level for the CW agent). Concentrations outside those tolerance ranges triggered a repeat of any test procedures conducted since the last analysis.

3.3.1 Response Time

To evaluate M90-D1-C response time, the target test conditions were established at 22 ± 3ºC and 50 ± 5% RH. Initially 10 L/min of clean humidified air were passed through the clean air plenum. The M90-D1-C sampled the clean air for a minimum of 30 seconds or until a stable reading was indicated, but not exceeding 10 minutes, to obtain a baseline reading for the M90-D1-C. The clean air plenum also was sampled with the appropriate reference method. This sampling took place after the M90-D1-C reading was stabilized.

Concurrent with the baseline measurements the target challenge concentration in the high challenge plenum was established. The high challenge concentration was generated at the target test conditions. For AC, the generator operating conditions and the dilution flow were adjusted as needed to establish a challenge concentration within ± 20% of the IDLH level. For the CW agents, a delivered concentration within 35% of the target level was acceptable. Reference samples were collected and analyzed immediately to establish the challenge concentration and demonstrate stability.

After a stable baseline reading was obtained from the M90-D1-C on clean air, and the challenge concentration was stable at the target concentration, the four-way valve at the M90-D1-C inlet was switched to sample from the challenge plenum. The response of the M90-D1-C was then recorded and the time to produce an alarm was considered the response time. The M90-D1-C sampled from the challenge plenum for a minimum of 30 seconds, up to a maximum of 10 minutes. The challenge concentration was determined by the reference method as frequently as possible during the procedure. For AC, a reference sample was taken prior to every challenge with the M90-D1-C.

After the challenge sampling, the sample inlet four-way valve was switched to again sample from the clean air plenum. The time required for the M90-D1-C to clear (i.e., the time to return to its starting baseline or non-alarm reading) was recorded as the recovery time. After a maximum of 10 minutes, regardless of whether the M90-D1-C returned to baseline, subsequent cycles of alternating challenge/clean air sampling were carried out, controlled by the four-way valve. A total of five such challenge/clean air cycles were completed.

The same sampling procedure was carried out at different temperature and RH conditions or challenge concentration to evaluate temperature and RH effects and response thresholds. For AC and each CW agent, the initial test was conducted at the levels shown in Table 3-1. If the instrument gave an over-scale reading when challenged at the initial level at the normal

temperature and RH conditions (22ºC and 50% RH), a lower challenge concentration was chosen that provided an on-scale reading. All subsequent tests for that TIC or CW agent used that lower challenge concentration. If the instrument did not respond to the IDLH or other initial concentration selected, then the response threshold procedure in Section 3.3.5 was conducted; but, all subsequent tests planned for that TIC or CW agent were eliminated. Otherwise, testing proceeded as described.

Following the five challenge/clean air cycles, six cycles were conducted in which the M90-D1-C sampled sequentially from the high, low, and clean air challenge plenums. The high challenge plenum provided the respective target concentrations (Table 3-1), and the low challenge plenum provided a concentration of approximately 0.1 times that level, or the response threshold (see Section 3.3.5), whichever was greater. Clean air was sampled alternately with sampling from the challenge plenums, and the order of sampling from the high (H) and low (L) challenge plenums was also alternated, i.e., the order of sampling was clean air/H/L/clean air/L/H/clean air/H/L/ . . ,. for a total of six such cycles. This procedure simulated use of the M90-D1-C in locations having different degrees of contamination.

3.3.2 Recovery Time

The time for the M90-D1-C to return to its baseline reading or non-alarm state after removing a challenge concentration was measured as described in Section 3.3.1.

3.3.3 Accuracy

In all of the response threshold and response time tests, the challenge concentration was measured using a reference method or monitor. Those measurements confirmed that the target TIC or CW agent was present at the appropriate challenge concentration. The degree to which the M90-D1-C correctly identified the challenge TIC or CW agent was evaluated as the measure of accuracy.

3.3.4 Repeatability

Repeatability was assessed using M90-D1-C responses obtained from the five repeated challenge/clean air cycles or the high challenge/low challenge cycles. The repeated test results at the same environmental and concentration conditions were used to quantify the repeatability of the measurements and the effects of test conditions on repeatability.

3.3.5 Response Threshold

The response threshold of the M90-D1-C was evaluated by repeating the procedure in Section 3.3.1 at successively lower (or if necessary, higher) concentrations. The response threshold was determined at the baseline environmental condition of 22 ± 3ºC and 50 ± 5% RH, in the absence of any interfering chemicals. The manufacturer's reported detection limit (± 50%) was used as the starting concentration. If the manufacturer did not provide a detection limit, a concentration at least 10 times lower that the IDLH or target concentration was chosen. If there was no response at the starting test concentration, then the concentration of the challenge was

increased by a factor of two. Similarly, if the M90-D1-C responded to the starting concentration, then the challenge concentration was decreased by a factor of two. The increase or decrease in concentration was continued accordingly, until the response threshold had been bracketed. The minimum concentration producing a M90-D1-C response was denoted as the response threshold.

3.3.6 Temperature and Humidity Effects

The tests described in Section 3.3.1 were repeated at the target concentrations shown in Table 3-1, over the range of environmental conditions shown in Table 3-6. Five repeat runs were performed at each set of test conditions (in one case, a sixth run was conducted and recorded at the operator's discretion, to ensure consistency of the challenges). The data at different temperature and RH conditions were used to infer whether these conditions affected the detection (i.e., accuracy, repeatability, response threshold) of the M90-D1-C for the target chemical. The effect on response time and recovery time also was assessed.

3.3.7 Interference Effects

To evaluate the effects of the interferents described in Section 3.2.6, the test system shown in Figure 3-3 was modified by adding an interferent vapor generator. The output from this source was directed as needed to mix with the humidified air flowing to the challenge plenum. The test chemical generation was independently controlled to generate interferent in the absence or presence of the test chemical. This allowed interference effects to be evaluated with the interferent alone and with each interferent and TIC or CW agent together. Testing with the interferent alone allowed evaluation of false positive responses, and testing with the interferent and chemical together allowed evaluation of false negative responses caused by the interferents. The test procedures also allowed observation of interferent effects on the response time and recovery time of the M90-D1-C. The target concentrations of the planned interferents are shown in Table 3-5. Those concentrations are shown in terms of the equivalent total hydrocarbon concentration in ppmC. These target concentrations are based on actual indoor measurements by Battelle or on published data, as described in Section 3.2.6.

Interferent testing involved only one interferent at a time. Testing was done by alternately sampling clean air and the interferent mixture, for a total of up to five times each, in a procedure analogous to that described in Section 3.3.1. However, if no interferent effect was observed after three such test cycles, the test was truncated. Testing with interferents alone involved alternately sampling from the clean air plenum and then from the challenge plenum, to which only the interferent in clean air was delivered. The same process was used for testing with interferents and TIC or CW agents together, with the two compounds diluted together in humidified air delivered to the challenge plenum. The same TIC and CW agent concentrations used in the initial testing under Section 3.3.1 were used in this test, i.e., the levels shown in Table 3-1.

A response from the M90-D1-C with the interferent alone was recorded as a false positive; and the absence of a response, or a reduced response, to the TIC or CW agent in the presence of the interferent was recorded as a false negative.

The replicate test runs conducted with the interferent plus TIC or agent also allowed the response time and recovery time of the M90-D1-C to be assessed with interferents present. Differences in response and recovery times, relative to those in previous tests with only the TIC or agent present, were attributed to the effect of the interferent vapor.

3.3.8 Cold-/Hot-Start Behavior

The cold-/hot-start tests were conducted in a manner similar to the response time test in Section 3.3.1. Prior to these tests, however, the M90-D1-C was not allowed to warm up per the manufacturer's recommendation. Only one cold-/hot-start test was performed per day.

The cold-start test was conducted twice, once with the M90-D1-C at room temperature and, subsequently, at reduced temperature, prior to start-up. In the former test, the M90-D1-C was stored with the power off at 22 ± 3ºC for at least 12 hours prior to testing. The cold-start effect was assessed by observing the time from powering up the M90-D1-C to its first readiness to provide readings. This was considered the start-up delay time.

For the reduced temperature cold start, the M90-D1-C was placed in a refrigerated enclosure (5 to 8ºC) with the power off for at least 12 hours overnight. At the start of the next test day, the cold-start test was repeated to record the start-up delay time.

For the hot-start test, the M90-D1-C was placed in a heated enclosure at 40 ± 3ºC for at least 12 hours overnight. At the start of the next test day, the hot-start test was conducted in the same fashion as the cold-start tests to determine start-up delay time.

In initial runs per Section 3.3.1 procedures, the M90-D1-C was found not to respond to AC. Therefore, the response time, recovery time, repeatability, and accuracy could not be determined with AC after a cold/hot start. Instead, qualitative evaluations of cold/hot start behavior were conducted, using a nerve agent simulant to obtain a response from the M90-D1-C.

3.3.9 Battery Life

Battery life was evaluated by assessing the duration of continuous M90-D1-C operation on battery power. Fully charged batteries were installed, and the M90-D1-C was turned on and allowed to fully warm up. For this test, a nerve agent simulant was used to produce an alarm on the M90-D1-C. The M90-D1-C then sampled clean air for 30 minutes, and the simulant was sampled again. This procedure was repeated with the M90-D1-C operating continuously until it no longer responded to the simulant challenge. The total time of operation was recorded as the measure of battery life. Any warnings of impending battery failure provided by the M90-D1-C are noted in this test.

3.3.10 Operational Characteristics

Key operational characteristics of the M90-D1-C were evaluated by means of the observations of test operators and by inquiry to the M90-D1-C vendor. Ease of use was assessed by operator observations, with particular attention to the conditions of use by emergency first responders.

Signal or data output capabilities were assessed by observations of the personnel who operated the M90-D1-C during testing. The type of data that was output was noted on the data sheets (e.g., audio and/or visual alarm, bar graph, low/med/high indication, and/or quantitative measure of concentration). In addition, the clarity and readability of the output were noted, especially in low light conditions or when holding the M90-D1-C while walking, as in use by a first responder. The availability of multiple forms of data output or display also was assessed (e.g., the availability of both a visual display and an analog voltage output for recording purposes).

The vendor was asked for the purchase and operational costs of the M90-D1-C as tested. Estimates for key maintenance items also were requested from the vendor.

Chapter 4
Quality Assurance/Quality Control

QA/quality control (QC) procedures were performed in accordance with the program quality management plan (QMP)[2] and the test/QA plan for this verification test.[1]

4.1 Equipment Calibration

4.1.1 Reference Methods

The reference methods used for determining AC and the CW agents are summarized in Section 3.2.5. The analytical equipment needed for these methods was calibrated, maintained, and operated according to the quality requirements of the reference methods and Battelle's normal documentation. Procedures for blank sampling during testing and for calibration of reference methods are described below.

For AC testing, blank reference samples were run before each challenge concentration. The sequence of reference sampling thus included establishing the concentration prior to testing the M90-D1-C, running a blank on clean air, switching to challenge gas and taking a reference sample immediately prior to challenging the M90-D1-C with the challenge gas, and again running a blank when the M90-D1-C was once more sampling clean air. In testing with GB and HD, blank gas sample bags were run at the start of each test day.

Calibration procedures for the reference and other analyses were as follows:

The GC reference method for AC was calibrated by preparing gas mixtures in 1-L gas sampling bags. For AC, calibration standards were prepared by diluting 0.5 to 4 mL of commercial concentrated AC gas standards (e.g., 10,000 ppm AC in nitrogen) in 800 mL of clean air in a bag. Three samples from each bag were injected by syringe into the GC, and the peak area was recorded. Several such calibration standards ranging from 12.5 to 50 ppm AC were prepared and analyzed over a three-day period. The regression of peak area versus AC standard concentration had the form Peak Area = 0.7192 × (AC, ppm), with an r^2 value of 0.9961.

Calibration standards for the CW agents were prepared by diluting stock agent to micrograms per milliliter concentrations and then injecting a 1-µL volume of each standard into the GC/FPD. Calibration was based on a regression of peak area versus amount of agent injected.

The THC analyzer used to document the interferent levels provided in testing was calibrated by filling a 25-L Tedlar bag with 33 ppm of propane in air from a commercial gas standard. Since propane is a three-carbon molecule, this standard constitutes a THC concentration of 99 ppmC. This standard was used for calibrating the THC analyzer throughout the verification. Clean air from the room was used for zeroing.

4.1.2 Instrument Checks

The M90-D1-C was operated and maintained according to the vendor's instructions throughout the verification test. Maintenance was performed according to predefined M90-D1-C diagnostics. Daily operational check procedures for the M90-D1-C were performed with two vendor-supplied simulant tubes. Proper response of the M90-D1-C to the simulants was required before testing could proceed.

4.2 Audits

4.2.1 Performance Evaluation Audit

As described in Section 3.2.7.5, a PE audit was conducted to assess the quality of reference measurements made in the verification test. For AC, the PE audit was performed once prior to the verification test by diluting and analyzing a standard that was independent of the standards used during the testing. The acceptable tolerance for this PE audit was ±20%. Table 4-1 shows that the result of the PE audit was within the target tolerance. For the CW agents, check standards of GB and HD were prepared by individuals other than the staff conducting the reference analyses. The reference data obtained for these standards were compared. For GB, standards were prepared at concentrations of 1.0, 0.75, 0.50, 0.25, 0.1, and 0.05 µg/mL. All results were within 5% for the separate standards made by the two individuals. For HD, standards were prepared at concentrations of 5, 2.5, 1.0, and 0.5 µg/mL. All results were within 9% for the separate standards made by the two individuals.

Table 4-1. Performance Evaluation Audit Results

TIC	Sample	Date of Audit	Concentration	Result	Agreement (%)
AC	Standard (Cylinder B0005506)	7/12/04	10,020 ppm	43.2 ppm	9.8
	PE Audit Std (Cylinder LL320)		10,000 ppm	47.8 ppm	

4.2.2 Technical Systems Audit

The Battelle Quality Manager also conducted a technical systems audit (TSA) to ensure that the verification test was performed in accordance with the test/QA plan[(1)] and the ETV QMP.[(2)] As part of the audit, the Battelle Quality Manager reviewed the reference sampling and analysis

methods used, compared actual test procedures with those specified in the test/QA plan,[1] and reviewed data acquisition and handling procedures. Observations and findings from this audit were documented and submitted to the Battelle Verification Test Coordinator for response. The records concerning the TSA are permanently stored with the Battelle Quality Manager.

4.2.3 Data Quality Audit

At least 10% of the data acquired during the verification test was audited. Battelle's Quality Manager traced the data from the initial acquisition, through reduction and statistical analysis, to final reporting, to ensure the integrity of the reported results. All calculations performed on the data undergoing the audit were checked.

4.3 QA/QC Reporting

Each assessment and audit was documented in accordance with the test/QA plan.[1] Once the assessment report was prepared, the Battelle Verification Test Coordinator ensured that a response was provided for each adverse finding or potential problem and implemented any necessary follow-up corrective action. The Battelle Quality Manager ensured that follow-up corrective action was taken.

Chapter 5
Statistical Methods

To extract the most information about the M90-D1-C performance from the test procedures, a statistical analysis of the test results was performed whenever appropriate. Such an analysis used all available data to explore the impact of test parameters on the M90-D1-C performance. Section 5.1 summarizes the statistical approaches and the parameters tested. The performance parameters of response threshold and battery life were assessed with simple comparisons that did not require statistical analysis. Section 5.2 describes the analyses used for these performance parameters.

5.1 Statistical Analyses

For a given chemical and test condition, several successive readings of the M90-D1-C response to the chemical were recorded. The chemical exposures alternated with clean air samples. Test conditions included a range of temperatures, relative humidities, and starting environments. Performance was also assessed in the presence of interferents alone and in the presence of interferents and GB. These data were the basis for the statistical analysis of M90-D1-C performance.

The statistical analyses focused on the following performance parameters:

- Response time
- Recovery time
- Accuracy
- Repeatability
- False positives/false negatives

and considered the following explanatory variables:

- Identity of the target TIC or CW agent
- Temperature
- Humidity
- Identity and presence/absence of interferent
- Fluctuation in chemical concentration.

As described in Chapter 6, statistical analysis could only be conducted using the data from testing with GB.

5.1.1 Analysis of Response, Response Time, and Recovery Time

The effects of temperature and humidity on the actual response were investigated using the Jonckheere-Terpstra test.[5] This non-parametric method tests the hypothesis of no association between response and temperature or humidity versus the hypothesis that the response increases or decreases as temperature or humidity increases. The test accommodates the categorical nature of the dependent (response) and independent (temperature or humidity) variable and is appropriate when both the dependent and the independent variables have a natural ordering (low, medium, and high in this case). Furthermore, the Jonckheere-Terpstra test is appropriate when the sample size is small or the data are sparse.

Unlike temperature and humidity, start state has no natural ordering. The Kruskall-Wallis test[5] was used to determine whether start state has an effect on machine response. This test is equivalent to an analysis of variance (ANOVA) performed on the ranked data. Unlike the Jonckheere-Terpstra test, the Kruskall-Wallis test simply tests for differences in response among the start state alternatives (i.e., the alternative hypothesis is not ordered). Like the Jonckheere-Terpstra test, it accommodates small sample sizes and sparse data.

For the analysis of response time, a standard ANOVA was used. This allowed testing for the effect of temperature, humidity, and start state on the response time. To investigate the effect of temperature, for example, the following model was fit:

$$Y_{ij} = \mu + \alpha_j + \epsilon_{ij} \qquad (1)$$

Here Y_{ij} denotes the log of the ith response time for a given TIC under temperature j. The term μ is a constant common to all observations, the term α_j denotes the effect of temperature j, and the term ϵ_{ij} accounts for variation not explained by the model components μ and α_j.

The log response time was modeled because time-to-event measurements are typically skewed to the right. The log transformation is a standard technique used to achieve normality of error[6] effects when the data are skewed in such a manner. This model provided the average log response time under a given set of conditions. This average was transformed back into the original scale (as opposed to log scale) by exponentiating it. Thus, the modeled geometric mean of the response times was reported under the given set of conditions. The significance of effects of interest was tested by evaluating the corresponding coefficients in the model. Thus, to test whether temperature had an effect on log response time, a standard F test was used to test whether α_j is equal to zero for all j. For more information on the ANOVA approach, see Kirk.[6]

The analysis of recovery time was similar to that of response time unless there were recovery times that were "censored." When the M90-D1-C did not recover within the maximum allotted time of 600 seconds, that particular recovery time was considered censored. In a censored model, instead of assuming that the log recovery times, Y_{ij}, have a joint normal density function, the likelihood for the vector of recovery times, Y, is assumed to be:

$$f(Y) = \prod_{C^*} g\left(Y_{ij}\right) \prod_{C} S\left(Y_{ij}\right) \qquad (2)$$

where C is the collection of censored observations and C^* is the collection of uncensored observations. Here g is a normal density function and S is the "survival" function:

$$S\left(Y_{ij}\right) = 1 - \Phi\left(\left(Y_{ij} - \left(\mu + \alpha_j\right)\right) / \sigma\right)$$

where Φ is the standard normal distribution function and σ is the standard deviation for the recovery times. The parameter μ represents the common constant; the parameter α_j represents the effect of treatment j. Once again, effects were investigated by testing the parameters of the model. Because the model addressed the log recovery times, the geometric mean of the recovery times was reported.[7]

5.1.2 Analysis of Accuracy

The M90-D1-C response was defined as "accurate" under a given set of conditions if the M90-D1-C:

1. Alarmed in the presence of a TIC or CW agent challenge
2. Correctly identified the TIC or CW agent.

The M90-D1-C accuracy was modeled under a given set of conditions via a binomial logit model.[8] The significance of an effect can be determined by investigating the corresponding coefficient(s) in the model. For example, to investigate accuracy under different temperatures, the following model applies:

$$\log(p_i / (1-p_i)) = \mu + \alpha_i \qquad (3)$$

where p_i is the proportion of accurate responses under temperature i. Here α_i again denotes the effect of temperature i and μ is the common mean. By testing the significance of the α_i's using a likelihood ratio test, the effect of each factor was tested.

5.1.3 Analysis of Repeatability

For testing the repeatability of response and recovery times for the M90-D1-C, a test of equal variances was used. Where there is a difference between the variability in response or recovery times for the different levels of temperature or humidity, there is evidence that temperature or humidity has an effect on the repeatability of the response or recovery time. The specific test used to test for equal variances was the Brown-Forsythe test.[6] This test is essentially an ANOVA run on the absolute deviation from the treatment (level of temperature or humidity) medians.

For testing repeatability of the M90-D1-C response, an approach was used that took into account the categorical nature of the response data. For all responses observed under a given set of conditions, the mode (the most common response) was computed. The number of observed

responses that equaled that mode was then determined. Thus, the proportion of responses equaling the most common response was the measure for the M90-D1-C response repeatability. This proportion was modeled using a binomial logit model.

5.1.4 False Negatives and Positives Analysis

To test whether interferents caused false negatives in the M90-D1-C response, Dunn's non-parametric multiple comparisons procedure was used.[9] To employ this procedure, the responses for all interferent tests are ranked (ties receive average ranks). The test statistic, which is asymptotically normal, is then:

$$\frac{R_i - R_C}{\sqrt{\left(\frac{N(N+1)}{12}\right)\left(\frac{1}{n_i} + \frac{1}{n_C}\right)}} \tag{4}$$

where R_i is the average rank for interferent i, R_C is the average rank for no interferent, n_i is the number of tests for interferent i, n_c is the number of tests for no interferent, and $N = n_i + n_c$. The smaller this test statistic is, the greater the evidence that the given interferent is creating a false negative response.

To investigate the proportion of false positives, a Clopper-Pearson approach[10] was used. To estimate the rate of false positives, the sample proportion was used (i.e., the number of false positives divided by the number of trials). Along with this point estimate, a measure of its uncertainty was calculated in the form of a 95% confidence interval. Simply because the process did not register a false positive for a particular interferent does not guarantee that it would never register a false positive for that interferent. This methodology makes an effort to quantify such a possibility by determining bounds for the false positive rate estimate based on its value and the number of trials. By assuming that the response obtained was representative of M90-D1-C performance, the individual tests may be modeled as a binomial distribution, and standard methods of confidence interval estimation may be employed. The Clopper-Pearson "exact" interval is commonly used in such instances. Its endpoints are directly calculated from the binomial distribution without approximation.

5.1.5 Analysis of Response to Alternating Concentrations

This analysis addressed the M90-D1-C response to varying concentrations of a target TIC or CW agent. As described in Section 3.3.1, the test procedure involved sequentially sampling clean air followed by high (H) and low (L) concentrations in varying order (i.e., clean air/H/L/clean air/L/H/clean air/H/L. . .). The data analysis involved two separate analyses. The first analysis assessed whether response to a high (low) concentration preceded by a low (high) concentration is different from response to a high (low) concentration preceded by clean air. The assessment was accomplished using a Cochran-Mantel-Hansel statistic.[8] Empty cells for this contingency table analysis were filled with counts of 0.01 to allow for convergence of the test statistic. In the second analysis, the difference between the response for the two challenge levels was investigated. More specifically, when challenged by a high concentration after being

challenged by a lower concentration, the machine response should increase. Similarly, when challenged by a low concentration after being challenged by a higher concentration, the machine response should decrease. The proportion of tests exhibiting this behavior for each target chemical was recorded. Clopper-Pearson bounds were placed on the probability that the machine response would increase or decrease as appropriate. Results of this analysis are presented in Section 6.3.

5.2 Other Analyses

The data used to evaluate the response threshold were the replicate M90-D1-C readings obtained at each succeeding TIC or CW agent concentration. These data were tabulated, along with the corresponding reference method data that established the challenge concentration. The response threshold was determined by inspection as the lowest reference method concentration that produced a positive M90-D1-C response in all replicate runs. In this evaluation, any positive M90-D1-C response was taken as detection of the target TIC or CW agent, i.e., M90-D1-C response of L (low) was sufficient in terms of the response threshold evaluation.

Battery life was assessed. Battery life is reported as the total time from start-up to battery exhaustion when the M90-D1-C unit was warmed up and operated continuously solely on battery power at room temperature and 50% RH. This time was measured from initial start-up to the point when the M90-D1-C no longer responded to a challenge mixture of a nerve agent simulant in air. Any warnings of impending battery failure provided by the detector are noted in this test.

Chapter 6
Test Results

As discussed in Chapter 5, statistical approaches were used to test for the effects of different conditions on the M90-D1-C performance. The following sections summarize the results from this verification. A more detailed presentation of the modeled statistical results is included in Appendix A of this report.

One M90-D1-C unit was used in all testing. Environics chose to provide a single engineering unit for this test because Battelle's surety license decontamination requirements prevent returning the entire instrument after exposure to CW agents. As stated in Chapter 3, the M90-D1-C was tested with AC, HD, and GB. In initial testing with AC, it was found that the M90-D1-C did not respond, though tested at concentrations up to 346 ppm AC (nearly seven times the IDLH level). This result was discussed with the vendor, who indicated (contrary to previous information) that the tested M90-D1-C was not programmed to alarm for AC. It should be noted that there may be M90-D1-Cs in use that are programmed to respond to AC. However, this can only be established definitively for a given unit by contacting the vendor or testing directly with an AC challenge. No further testing was conducted with AC, but a nerve agent simulant was used to carry out cold/hot start tests and the battery life test.

The M90-D1-C unit tested also was found not to respond to HD, although it was programmed to do so and did respond to the vendor-supplied simulants. This was an unexpected result, since a test report[11] written for the Domestic Preparedness Program by the Soldier and Biological Chemical Command lists results in which the M90-D1-C responded and alarmed to HD at concentrations above and below the AEGL-2 level. After discussion with the vendor of the M90-D1-C, at the vendor's direction the M90-D1-C was put through a "decontamination" program provided as part of the M90-D1-C software. The M90-D1-C was connected to a laptop computer, and the decontamination program was initiated. The M90-D1-C was then subjected to the decontamination program for one hour. At the conclusion of that hour, the M90-D1-C was tested again with 5.5 mg/m^3 of HD. Again, the M90-D1-C unit did not respond. After this observation, no further HD testing was performed with the M90-D1-C.

The M90-D1-C was provided to Battelle with Environics' M90-UIP (User Interface Program), which allows logging of raw detector data during operation via a data cable and computer. After running the decontamination program, data were collected during the HD challenge and subsequently e-mailed to Environics for analysis. Environics stated that its review of this raw data showed that the spectral signature produced by the M90-D1-C did not match the programmed profile for HD.Environics suggested that this indicated that the HD used in testing

may have been contaminated It should be noted that the HD used in this testing was determined to have a purity of 95.8%.

The M90-D1-C unit did respond as expected to the presence of GB, and the following sections provide the results from testing the M90-D1-C with GB. The GB used in this testing was determined to have a purity of 85.1%.

6.1 Response Time

Results of the response time analysis for GB are summarized here and detailed in Appendix A, Section A.1. Table 6-1 summarizes data used for the analysis of response time and other performance parameters.

Table 6-1. GB Test Results

CW Agent[a]	Environmental Conditions	M90-D1-C Response	Alarms (Indicated Chemical)	Response Time Range (s)	Recovery Time Range (s)
GB	Control (22°C/50% RH)	Low (4) – Medium (1)	5/5 (Nerve)	8-10	15-199
	22°C/<20% RH	Low (3) – Medium (2)	5/5 (Nerve)	8-10	12-110
	22°C/80% RH	Medium	5/5 (Nerve)	6-7	600[b]
	35°C/50% RH		5/5 NR[c]		
	35°C/80% RH	Low	4/5 (Nerve) 1/5 NR	13-25	12-28
	5°C/50% RH	High	6/6 (Nerve)	3-17	600[b]

[a] Results shown are from data at target concentration level in Table 3-1.
[b] M90-D1-C did not return to a cleared response within 600 seconds.
[c] NR - No Response.

At the medium RH condition (50 ± 5%), the modeled response time for GB at low temperature (5ºC) was about 5 seconds (range 3 to 17 seconds), and the modeled response time at room temperature (22ºC) was about 9 seconds (range 8 to 10 seconds). However, at the high temperature level (35ºC) with medium humidity, the M90-D1-C did not alarm at all for GB. Nevertheless, the M90-D1-C did alarm at high temperature and high humidity (35°C/80% RH), with a response time range of 13 to 25 seconds in 4 of 5 challenges. These results suggest longer response time for GD at higher temperatures.

At room temperature (22 ± 3°C), the modeled response time at low humidity (<20%) was about 9 seconds (range 8 to 10 seconds), at medium humidity was about 9 seconds (range 8 to 10 seconds), and at high humidity (80%) was about 6 seconds (range 6 to 7 seconds). These results indicate that the M90-D1-C response time was only minimally affected by humidity, with a slightly faster response at high humidity.

6.2 Recovery Time

Results of the recovery time analysis for GB are summarized here and detailed in Appendix A, Section A.2. Recovery time results are also illustrated in Table 6-1.

In both the temperature and RH tests of recovery times for GB, recovery times in excess of 600 seconds were observed. The recovery times for all runs of GB at low temperature and medium humidity exceeded 600 seconds. The recovery times for all runs of GB at room temperature and high humidity also exceeded 600 seconds.

At medium RH, the recovery time at low temperature was in excess of 600 seconds, whereas the modeled recovery time at room temperature was about 57 seconds (range of 15 to 199 seconds). However, the magnitude of the latter mean was greatly influenced by one outlier. For 4 of the 5 runs of GB at medium (50%) RH and room temperature, the M90-D1-C response was "low," and the recovery time took 32 seconds or less. For the other run of GB at those conditions, the M90-D1-C response was "medium," and the recovery time was 199 seconds. These results indicate longer recovery times for GB at the lower temperature. At the medium RH/high temperature level, the M90-D1-C did not alarm for GB.

At room temperature (22°C), the modeled recovery time at both low and medium humidity was approximately 30 seconds (excluding the outlier noted above). However, at high humidity the recovery time for GB exceeded 600 seconds in all runs. These results indicate longer recovery times for GB at higher humidity.

6.3 Accuracy

Results of the accuracy analysis for GB are summarized here and described in Appendix A, Section A.3. Results of tests that involved alternating different challenge concentrations, as opposed to alternating clean air and a single challenge concentration, are summarized below and detailed in Appendix A, Section A.8. Accuracy results are also illustrated in Table 6-1. The M90-D1-C was considered to be accurate if it alarmed in the presence of the agent and correctly identified the agent class.

At medium humidity (50% RH), the M90-D1-C performed with 100% accuracy to GB on all runs at low temperature and room temperature. However, at the medium humidity and high temperature, 0% accuracy was achieved, since the M90-D1-C did not respond to the presence of GB.

There was no evidence that relative humidity at room temperature had an effect on the M90-D1-C accuracy. Over all of the humidity conditions at room temperature for the GB testing, the M90-D1-C performed with 100% accuracy. At the high temperature and high humidity condition, an accuracy of 80% (4/5) was found.

For the alternating concentration tests (described in Section 3.3.1), the high concentration challenge for GB was 4 × IDLH and the low concentration challenge was 0.5 × IDLH. The purpose of the alternating concentration test is to assess whether instrument response to a given concentration is affected by initial exposure to an alternate concentration of GB, as compared to an initial exposure to clean air. There was no evidence that the M90-D1-C response to GB at a given concentration was affected by a preceding alternate concentration. The response to GB at both the high and the low concentrations tended to be "Low" whether or not the GB challenge was preceded by the alternate GB concentration or by clean air (which produced no response).

6.4 Repeatability

Results of the repeatability analysis are summarized below and detailed in Appendix A, Section A.4.

Repeatability addressed the consistency of the "Low," "Medium," and "High" readings of the M90-D1-C for GB. Even though temperature has an effect on the level of the M90-D1-C response to GB (Section 6.6), there was little evidence of a dependence of variation of response on temperature. At the low temperature setting, the M90-D1-C consistently alarmed as a "High" response for GB. At the room temperature setting, the M90-D1-C alarmed as a "Low" response for GB for four out of the five runs. At the high temperature setting, the M90-D1-C did not respond at all to the presence of GB at medium humidity. The same is true for the repeatability of response for the different RH conditions. For the low and medium humidity runs, the response tended to be "Low" in the presence of GB. For the high humidity response, the response was consistently "Medium."

There was no evidence that variation in either temperature or humidity had an effect on the repeatability of the response time for GB. Also, there was insufficient data to assess whether temperature had an effect on the repeatability of recovery time for GB. At the low temperature/ 50% RH setting, the recovery time exceeded the 600 second threshold; and at the high temperature/50% RH setting, there was no response to the GB and thus no recovery time. An assessment of the effect of humidity on repeatability of recovery time at room temperature showed no evidence of a humidity effect for the medium and low humidity settings, but for the room temperature/high humidity condition, the recovery time exceeded the 600-second threshold. However, tests at high temperature/high humidity (35°C/80% RH) showed recovery times of 12 to 28 seconds.

6.5 Response Threshold

Response threshold for GB was determined by challenging the M90-D1-C unit with successively lower concentrations until it no longer responded. Table 6-2 provides the results for the response threshold test. The responses listed in the table give the results for three successive challenge/ clean air cycles. For GB, the response threshold was between 0.05 and 0.1 mg/m^3 (0.008 and

0.017 ppm). This response level is below the IDLH concentration for GB of 0.2 mg/m^3 (0.035 ppm).

Table 6-2. Response Threshold Data

Agent (Concentration)	M90-D1-C Response
GB (0.75 mg/m^3) (0.13 ppm)	Low – Medium (Nerve)
GB (0.1 mg/m^3) (0.017 ppm)	Low (Nerve)
GB (0.05 mg/m^3) (0.008 ppm)	No Response

6.6 Temperature and Humidity Effects

The results of investigating temperature and humidity effects on the M90-D1-C response are summarized here and are detailed in Appendix A, Section A.5. Table 6-1 also illustrates temperature and humidity effect data.

Temperature had an effect on the M90-D1-C response to GB in the presence of medium (50%) RH. The M90-D1-C unit responded with a "High" response to all six runs at low temperature. As the temperature increased, the level of the response decreased. At the high temperature, the M90-D1-C unit did not respond to the presence of GB.

Humidity over the range of 20 to 80% RH did not appear to affect the M90-D1-C response to GB at room temperature.

6.7 Interference Effects

The results of investigating interference effects on M90-D1-C response are summarized here and are detailed in Appendix A, Sections A.6 and A.7. Table 6-3 summarizes data used for the analysis of interference effects in tests with both GB and an interferent present.

Table 6-3. Interference Effects Data

CW Agent[(a)]	Interferent	M90-D1-C Response	Alarms (Indicated Chemical)	Response Time Range (s)	Recovery Time Range (s)
GB	Control	Low (4) – Medium (1)	5/5 (Nerve)	8-10	15-199
	Latex Paint Fumes	Low	5/5 (Nerve)	11-19	17-249
	Ammonia Floor Cleaner	Low	5/5 (Nerve)	11-13	19-187
	DEAE	Low (3) – Medium (2)	5/5 (Nerve)	8-12	14-369
	Gasoline Engine Exhaust	Low	5/5 (Nerve)	9-11	16-124
	Air Freshener	Low	5/5 (Nerve)	9-13	11-288

[(a)] Results shown are with GB at the target concentration level in Table 3-1.

A false positive response would occur if the M90-D1-C responded and provided an alarm in the presence of an interferent, but in the absence of GB. A false positive was defined as any alarm under those conditions. For the five interferents tested, false positive alarms occurred consistently in the presence of ammonia floor cleaner vapors and latex paint fumes. In only one of the five DEAE challenges, the M90-D1-C responded with an alarm. The M90-D1-C did not respond to the presence of engine exhaust hydrocarbons or air freshener vapors.

False negative responses would occur if the presence of an interferent masked the presence of a TIC or CW agent and the M90-D1-C provided a lower response or did not respond to the TIC or CW agent. The M90-D1-C responded to all GB challenges when interferents were present; thus, false negative responses were not observed. Changes in response, response time, and recovery time due to interferences are discussed in the following paragraphs. The interferents did not affect the response or identification accuracy of the M90-D1-C to the presence of GB. The response tended to be a "Low" alarm in the presence of any interferent, and the correct indication of "Nerve" was always obtained (Table 6-3).

Some of the interferents did have a small affect on the response time of the M90-D1-C to the presence of GB. The modeled response time for GB went from a control of 9.4 seconds to 12 seconds in the presence of the ammonia floor cleaner and to 13.4 seconds in the presence of the latex paint fumes. These small increases in response time for GB are of no practical consequence. The modeled response times in the presence of DEAE, gasoline engine exhaust hydrocarbons, and air freshener vapors were within 2.5 seconds of the control result.

Overall, the interferents also did not affect the recovery time of the M90-D1-C after sampling GB. There was, however, a great deal of variability in the recovery time data. In general, during the GB and interferent testing, the recovery time for the first run was greater than 200 seconds. After the first run, the recovery time significantly decreased. By the third of the five runs in all cases except with DEAE, the recovery time was less than 60 seconds. The trend showed a decrease in recovery time upon each successive run, with the shortest recovery time being the fifth run for four of the five interferents

6.8 Cold-/Hot-Start Behavior

Qualitative analysis of the effects of insufficient warm-up time, under start-up conditions ranging from cold (5 to 8ºC) to hot (40ºC), is summarized here. These tests were conducted with a nerve agent simulant, and general observations are provided about start-up delay time and response.

In the room temperature cold-start test, the delay time, or time from powering the M90-D1-C on until it reached a ready state, was 8 minutes and 17 seconds, as programmed. The M90-D1-C responded to the simulant as a "Low" nerve alarm. Response times were generally less than 20 seconds, and recovery times ranged from 4 minutes 24 seconds to 33 seconds, showing a downward trend similar to that in tests conducted with GB (Section 6.7).

In the cold temperature cold-start test, the M90-D1-C was powered on and produced a "Failure" alarm after 8 minutes and 17 seconds. The M90-D1-C maintained the "Failure" alarm for 8 minutes and never reached a ready state. The M90-D1-C was then powered off and left off for 2 minutes. The M90-D1-C was turned on again, and the delay time was 6 minutes and 20 seconds. The M90-D1-C responded to the simulant as a "Low" nerve alarm, with response times ranging from about 30 to 80 seconds. Recovery times were short, ranging from 6 to 26 seconds.

For the hot temperature cold-start test, the delay time was 8 minutes and 20 seconds. The M90-D1-C responded to the simulant as a "Low" nerve alarm, with variable response and recovery times.

6.9 Battery Life

The M90-D1-C can be powered by several types of batteries (see Section 6.10). For this test, the M90-D1-C was powered with rechargeable nickel metal hydride (NiMH) batteries. The battery life test was conducted by placing a fully charged battery pack provided by the vendor in the M90-D1-C. The M90-D1-C was then powered on and allowed to warm up fully according to the manufacturer's directions. The battery life tests were conducted with a nerve agent simulant. The M90-D1-C responded to the simulant as a "Low" nerve alarm. The "Low Battery" light came on 1 hour and 47 minutes after start-up and quickly switched to a "Failure" alarm. At this time, the M90-D1-C did not respond when challenged with the simulant. After completion of verification testing, the vendor stated that the battery life documented in this report did not correspond with Environics' data and suggested that the reason for this difference was that the rechargeable battery provided by Environics for testing was not new.

6.10 Operational Characteristics

General performance observations noted during verification testing:

- Instrument Operation—The M90-D1-C has two caps that must be removed for the M90-D1-C to operate properly, the air inlet cap and the air outlet cap. After these caps are removed, the M90-D1-C can be powered on by switching the power/test switch from the "Off" to "On" position. This switch has two other options, SCCell and IMCell. These options are to be used when testing the M90-D1-C with a simulant to ensure proper operation. The M90-D1-C also has a separate switch to control the volume of the audio alarm.

- Instrument Indicators—The M90-D1-C has several lighted indicators to show the status of the detector. These indicators include Nerve, Blister, Blood, High, Med, Low, Low Batt, Failure, and Power Mode. When the M90-D1-C alarms to a challenge, it will indicate both the type of alarm (Nerve, Blister, or Blood) and the level of the alarm (High, Medium, or Low) by lighting up the lights that correspond to these alarms and by

producing an audible alarm. When the M90-D1-C detects a failure within its system, the "Failure" light and a different audible alarm occur.

- Warm-Up—The M90-D1-C generally took 8 minutes or more to reach a ready state after being turned on, whether starting from cold (5 to 8°C) room temperature or hot (40°C) storage conditions.

- Batteries—The M90-D1-C can operate on several types of batteries. There are two types of rechargeable batteries (NiMH and nickel cadmium) and two types of one-time-use batteries (lithium and magnesium).

- Errors—The M90-D1-C produced one "Failure" alarm during testing. In that case, after soaking at a cold temperature overnight, the M90-D1-C produced a "Failure" alarm during its warm-up period. The M90-D1-C was turned off, then restarted, and reached a ready state within about 6 minutes.

- Vendor Support—Before the verification testing, a vendor representative trained Battelle employees to operate the M90-D1-C. Testing proceeded according to the vendor's recommendations on how to operate the M90-D1-C for testing. The vendor also responded promptly when information was needed during the verification testing.

- Cost—The list price of the M90-D1-C, as used in this verification test, is approximately $17,500.

Chapter 7

Performance Summary

This chapter summarizes the overall performance results found in testing of one unit of the M90-D1-C with one TIC and two CW agents. This summary focuses on aspects of the performance that are most important in field use of the M90-D1-C by first responders. Consistent with that use, test procedures were conducted with challenge levels of the target chemicals that were at or near IDLH concentrations.

The M90-D1-C was tested with AC, HD, and GB. However, contrary to prior indications from the vendor, the M90-D1-C was not programmed to respond to AC. Also, the unit did not respond to HD challenges, although it was programmed to do so and did respond to the vendor-supplied simulants.

For GB, the M90-D1-C response time was minimally affected by temperature or humidity, with response times usually 10 seconds or less. However, in six of ten runs at the high temperature level (35°C), the M90-D1-C did not alarm for GB. The recovery times were about 30 seconds in most cases, but exceeded 600 seconds for all runs at low temperature (5°C) and medium humidity (50% RH) and for all runs at room temperature (22°C) and high humidity (80% RH).

The M90-D1-C identified GB accurately in most temperature and humidity conditions tested, and in all tests with interferents also present. The overall accuracy of identification in all tests was 91% (60/66) for GB. However, at the high temperature (35°C), the M90-D1-C did not respond to the presence of GB in six of 10 test runs (0/5 accurate responses at medium humidity and 4/5 accurate responses at high humidity). The M90-D1-C response at a given GB concentration was unaffected by a preceding higher or lower concentration.

Except for the absence of GB response in some tests at 35°C, there was no evidence that variation in either temperature or humidity had an effect on the repeatability of the response or response time for GB. Data were insufficient to assess whether temperature had an effect on the repeatability of recovery time for GB.

For GB, the M90-D1-C response threshold was between 0.05 and 0.1 mg/m^3 (0.008 and 0.017 ppm), which is below the IDLH concentration for GB of 0.2 mg/m^3 (0.035 ppm).

Temperature had an effect on the M90-D1-C response to GB. As the temperature increased with a 50% RH, the level of the response decreased. At the high temperature (35°C) , the M90-D1-C unit did not respond to the presence of GB. Humidity did not affect the M90-D1-C response to GB.

Ammonia floor cleaner vapors and latex paint fumes consistently produced false positive alarms when sampled by the M90-D1-C. However, none of the interferents had an effect on the response to GB when the agent and interferent were sampled together. Interferents did not significantly affect the response time or recovery time of the M90-D1-C in sampling GB. A decrease in recovery time was observed upon each successive run, with the shortest recovery time occurring in the last test run for four of the five interferents.

In the room temperature cold-start test using a nerve agent simulant, the delay time was 8 minutes and 17 seconds, as programmed. In the cold temperature cold-start test, the M90-D1-C produced a “Failure” alarm after 8 minutes and 17 seconds and never reached a ready state. After being powered off for 2 minutes, the delay time was 6 minutes and 20 seconds. For the hot temperature cold-start test, the delay time was 8 minutes and 20 seconds. In all three tests, the M90-D1-C responded to the simulant as a “Low” nerve alarm.

The battery life test was conducted by powering on a fully charged NiMH battery pack and allowing the M90-D1-C to warm up fully, then operate continuously until battery power was depleted. The battery life test was conducted with a nerve agent simulant. The M90-D1-C responded to the simulant as a “Low” nerve alarm. At 1 hour and 47 minutes after start-up the “Low Battery” light came on, followed immediately by a “Failure” alarm. At this time, the M90-D1-C did not respond when challenged with the simulant.

The M90-D1-C has two caps that must be removed for it to operate properly. The power/test switch has two options other than On/Off, which are to be used when testing the M90-D1-C with a simulant to ensure proper operation. The M90-D1-C also has a separate switch to control the volume of the audio alarm. The M90-D1-C has several lighted indicators (Nerve, Blister, Blood, High, Med, Low, Low Batt, Failure, and Power Mode) to show the status of the detector and took 8 minutes or more to reach a ready state after being turned on. It can operate on two types of rechargeable batteries (NiMH and nickel cadmium) and two types of one-time-use batteries (lithium and magnesium). The M90-D1-C produced only one “Failure” alarm during testing, i.e., that during the cold temperature cold start noted above.

Chapter 8

References

1. *Test/QA Plan for Verification of Portable Ion Mobility Spectrometers for Detection of Chemicals and Chemical Agents in Buildings,* Version 2, Battelle, Columbus, Ohio, June 2004.

2. *Quality Management Plan (QMP) for the ETV Safe Buildings Monitoring and Detection Technology Verification Program*, Version 1, Battelle, Columbus, Ohio, June, 2004.

3. Spicer, C. W., Gordon, S. M., Holdren, M. W., Kelly, T. J., and Mukund, R., *Hazardous Air Pollutant Handbook: Measurements, Properties, and Fate in Ambient Air*, ISBN 1-56670-571-1, CRC Press, Boca Raton, Florida, 2002.

4. Turpin, J. "Direct Steam Injection Humidification: Is It Safe for Building Occupants?" *Engineered Systems,* www.esmagazine.com/CDA/ArticleInformation/features/BNP__Features__Item/0,2503,23246,00.html.

5. Sprent, P. and Smeeton, M. C. *Applied Non-Parametric Statistical Methods*, Chapman and Hall, New York, 2001.

6. Kirk, R. E. *Experimental Design: Procedures for Behavioral Sciences*, Third Edition, Brooks/Cole Publishing Co., 1995.

7. Klein, J. P. and Moeschberger, M. L., *Survival Analysis: Techniques for Censored and Truncated Data*, Springer, New York, 1997.

8. Agresti, A. *Categorical Data Analysis*, John Wiley and Sons, New York, 1990.

9. Dunn, O. J., "Multiple comparisons using rank sums." *Technometrics* 6, 241-252, 1964.

10. Clopper, C. J. and Pearson, E. S.,"The use of confidence or fiducial limits illustrated in the case of the binomial," *Biometrika* 26, 404-13, 1934.

11. *Testing of M90-D1-C Chemical Warfare Agent Detector Against Chemical Warfare Agents Summary Report,* Soldier and Biological Chemical Command, Aberdeen Proving Ground, MD, http://hld.sbccom.army.mil/ip/md90_d1_detector_download.htm.