201-14835

HIGH PRODUCTION VOLUME (HPV) CHEMICAL CHALLENGE PROGRAM

RECEIVED
OPPT CBIC
05 DEC 19 AM 8:05

TEST PLAN

GAS OILS CATEGORY

Submitted to the US EPA

by

The Petroleum HPV Testing Group

www.petroleumhpv.org

Consortium Registration #

December 18, 2003

Updated December 16, 2005

Table of Contents

Plain Language Summary 3

Description of The Gas Oils Category 5

Category Rationale and Test Material Description 9

Evaluation of Existing Health Effects Data and Proposed Testing 10

Evaluation of Existing Physicochemical and Environmental Fate Data and Proposed Testing 18

Evaluation of Existing Ecotoxicity Data and Proposed Testing 22

Matrix of Available Data and Proposed Testing 23

References 24

Appendices

Appendix A. CAS Numbers and Descriptions of Category Members 30
Appendix B. Links to Additional Resources 35
Appendix C. Robust Summary (separate document) 36

Figures

Figure 1. Gas Oils Production Diagram 6
Figure 2. Refinery Stream Composition – Boiling Range vs. General Composition 7
Figure 3. Composition of Representative Samples of Gas Oils and Distillate Fuels 8
Figure 4. Olefin Content of Representative Samples of Gas Oils and Distillate Fuels 9

Tables

Table 1. Distillate Fuel Synonyms 5
Table 2: Matrix of Available Data and Proposed Testing 23

Plain Language Summary

The gas oils category includes both finished products (distillate fuels) and the refinery streams (gas oils) from which they are blended. The materials in this category, together with those in the Jet Fuel/Kerosene HPV category, constitute a generic class of petroleum substances commonly known as middle distillates. The distillate fuels covered in this category are used in diesel engines and for both industrial and domestic heating. While within the refinery the gas oil streams exist primarily as intermediates in closed systems. Selected gas oil streams may ultimately be blended into distillate fuels, marine bunker fuels and occasionally into lubricants. At ambient temperatures, all the substances in this category are liquids. Gas oil streams and distillate fuels are complex petroleum mixtures, composed primarily of saturated (paraffinic and naphthenic) or aromatic hydrocarbons with carbon numbers ranging from C_9 to C_{30}. The basic strategy of this test plan for characterizing the human health and environmental hazards of category members is to use data from gas oil streams that are higher in one of these two chemical classes to demonstrate the boundary of toxicity for materials in this test plan and to predict the potential hazards of untested gas oil streams.

The substances included in the Gas Oils category are similar from both a process and physical-chemical perspective, being differentiated from each other primarily by their aromatic and saturated hydrocarbon content. The compositions of the gas oil streams range from those that are predominantly saturated hydrocarbons to those that are predominantly aromatic hydrocarbons. Consequently, the category can be considered a continuum, bounded by materials that are compositionally either high in saturated hydrocarbons or aromatic hydrocarbons. While the ratio of the saturated and aromatic hydrocarbons may vary between category members the saturated and aromatic hydrocarbons species that make up the category members are similar. Based on the available data, the physical-chemical properties of an individual category member depend on its compositional makeup, vis a vis saturated and aromatic hydrocarbons. Therefore, gas oil streams that are predominantly saturated hydrocarbons will have similar physical-chemical properties, while those that are composed predominantly of aromatic hydrocarbons will have somewhat different properties. As products that are blended from the gas oil streams, the compositions of the distillate fuels fall within the range of the compositions shown by the gas oil streams and reflect the characteristics of the gas oils streams from which they are blended. Thus, the properties of representative samples of a blended distillate fuel and gas oils composed predominantly of saturated hydrocarbons or aromatic hydrocarbons can be used to demonstrate the boundary of toxicity for materials in this test plan and to understand the physical-chemical properties and toxicity of similar substances within the category.

A substantial body of data has been compiled on representative gas oil streams and distillate fuels. However, a thorough review of the existing data identified a lack of reproductive toxicity data on the materials in this category, and suggested the need for additional reproductive toxicity testing. Therefore, the Testing Group is proposing to perform reproductive/developmental screening studies (OECD 421) on two representative gas oil samples; one with a relatively high saturated hydrocarbons content and one with a relatively high aromatic hydrocarbons content. A reproductive/developmental screening study (OECD 421) will also be performed on a representative sample of a No. 2 distillate fuel, the substance in this category with the greatest potential for public exposure. As the data in the Robust Summary illustrate, distillate fuels and gas oil streams high in either saturated or aromatic hydrocarbons have similar effects with regard to several of the Screening Information Data Set (SIDS) mammalian toxicity endpoints, i.e. acute and repeat-dose mammalian toxicity. However, limited published literature indicate a gas oil's developmental toxicity, mutagenicity, and carcinogenicity correlate with the oil's aromatic content, specifically its 3-7 ring polycyclic aromatic compounds (PAC) content (Feuston, 1994). The Testing Group believes it is plausible that the gas oils reproductive toxicity also correlates with the PAC content.

Conducting these three studies will allow the Testing Group to:

- Complete the SIDS characterization of the mammalian toxicity on materials that represent the boundaries of the range of compositions found within the gas oils category, and
- Test the hypothesis that the reproductive toxicity of a gas oil stream correlates to its 3-7 ring PAC content.

The environmental fate characteristics of both gas oils and distillate fuels are due in large part to the physico-chemical parameters of the individual component hydrocarbons. Where physico-chemical data did not exist or were impractical to obtain, calculated physico-chemical and environmental data for selected constituents of gas

oils have been developed using the EPIWIN© computer model. Because biodegradation of gas oils has not been extensively studied, biodegradability testing of selected gas oils is proposed.

While the aquatic toxicity of distillate fuels has been adequately characterized, no data exist on the toxicity of individual gas oil streams. Therefore, the Testing Group proposes to test two gas oil streams, one with a relatively high saturated hydrocarbons content and one with a relatively high aromatic hydrocarbons content. Candidate streams also will be evaluated for their potential to produce the greatest water soluble (hence bioavailable) fraction in aqueous solutions (i.e., low carbon number).

The currently available data and that which will be generated by the proposed testing outlined in Table 2, combined with chemical characterization will provide sufficient information to predict the health and environmental hazards of the materials in the gas oils category.

Description of the Gas Oils Category

The Gas Oils category includes both finished products (distillate fuels) and the refinery streams (gas oils) from which they are blended. The specific CAS numbers and descriptions of category members are detailed in Appendix A. The nomenclature used to describe the distillate fuels (finished products) can be confusing. Table 1 shows synonyms that can be applied to various fuel types.

Table 1. Distillate Fuel Synonyms

	Fuel Oil No. 1-D	Fuel Oil No. 2	Fuel Oil No. 2-D	Fuel Oil No. 4
Synonym(s)	Diesel fuel; Diesel fuel oil no. 1 Diesel oil no. 1 No. 1 diesel Diesel oil (light) Arctic diesel	API no. 2 fuel oil Gas oil Home heating oil no. 2 No. 2 burner oil Diesel fuel Furnace oil no. 2	Diesel fuel Diesel fuel oil no. 2 Diesel oil no. 2 No. 2 diesel Diesel oil (medium)	Oil, fuel no. 4 Residual fuel oil no. 4 No. 4 fuel oil Residual fuel oil Marine boiler fuel Marine diesel fuel Diesel fuel no. 4 Grade 4

ATSDR, 1995

The fuel oils covered in this category are used primarily as heating oils and as fuels in many types of internal-combustion engines. Fuel oils No. 1-D and No. 2-D have been used for automotive diesel engines, while No. 4 diesel fuel is used for low and medium speed diesel engines in non-automotive applications. Diesel fuel #2 is almost identical in chemical composition to Fuel Oil #2, with the exception of the additives. Fuel oil #2 has been used as a home heating oil and as an industrial heating oil. Fuel Oil #4 has been used in commercial and industrial burners to generate steam, for space and water heating, pipeline pumping, and gas compression (ASTM, 2001; 2002). Two other classes of fuel oils, Fuel Oil #1(also known as kerosene) and Fuel Oil #6 (heavy fuel oil) are covered in separate API HPV Test Plans.

As shown in Figure 1, gas oil streams are produced either as distillates of atmospheric distillation or by secondary processing of the materials derived from the vacuum distillation of the residuum from the atmospheric distillation of crude oil. Materials from this secondary processing have higher aromatic and olefin contents than straight run gas oils. Distillate fractions that require only minor or no additional processing are known as "straight run" gas oils. The distillate fuels may be straight run or a blend of various gas oil streams (both straight run and cracked). Historically, straight-run gas oils are the major components of the distillate fuels, but rising demand has made it necessary to use increasing volumes of streams derived from the secondary processing of heavier fractions. Because they are manufactured to meet performance specification limits (and not specific chemical compositions), the chemical composition of a distillate fuel can vary since a product with the desired fuel properties can be formulated in a number of ways. Fuel oils are distinguished from each other based primarily on their boiling point ranges, chemical additives, and uses. However, whether straight run or blended, distillate fuels are produced to meet the ASTM specifications for either Fuel Oils or Diesel Fuel Oils (ASTM 2001, 2002). The ASTM specification for diesel fuels limits the aromatic content of No. 1 D and No. 2-D low sulfur diesel fuels to a maximum 35% by volume (ASTM, 2002).

Figure 1. Gas Oils Process Diagram

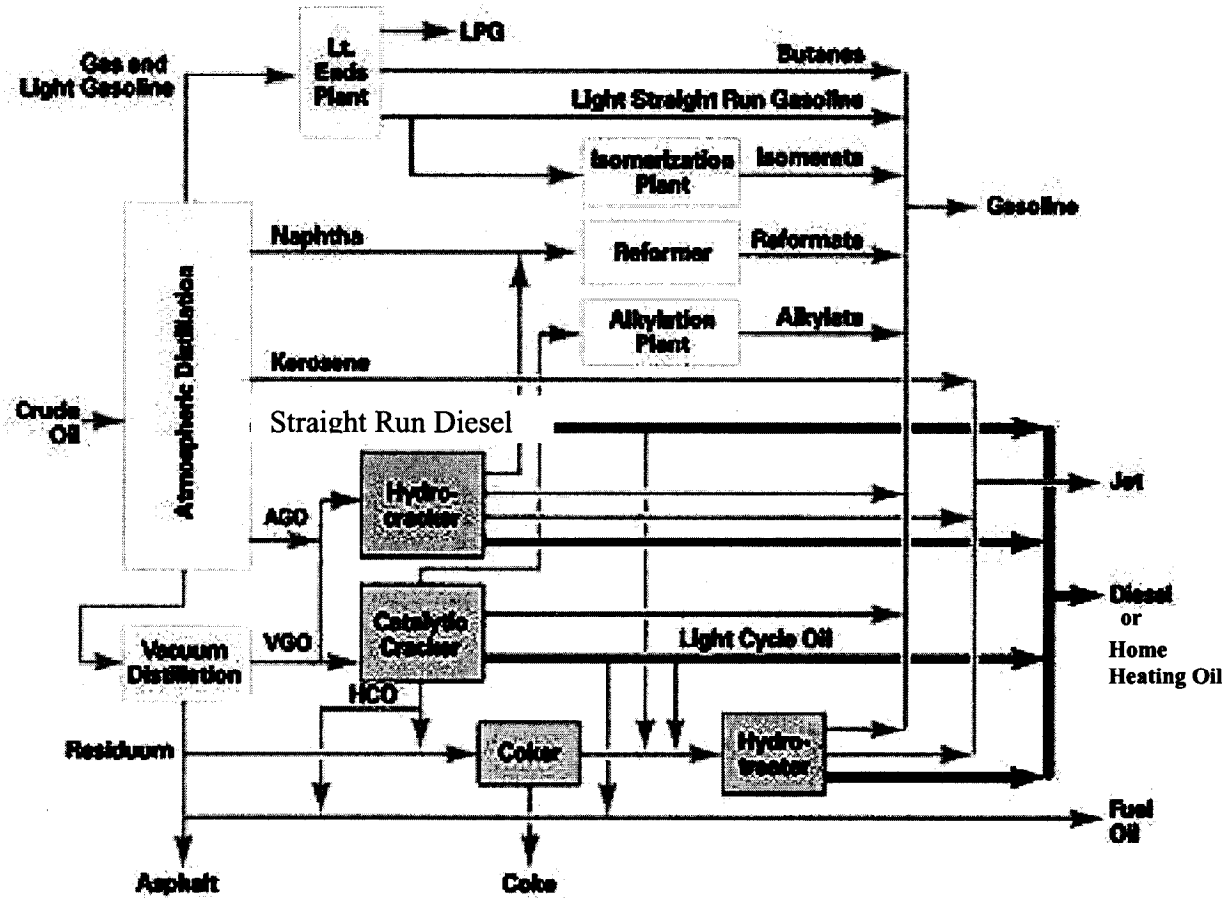

ChevronTexaco, 2003

Note: AGO = atmospheric gas oil
VGO = vacuum gas oil
HCO = heavy cycle oil

The materials in this category are complex petroleum mixtures that boil between 300 and 880°F (≈150 and 471°C) and are composed primarily of saturated and/or aromatic hydrocarbons with carbon numbers ranging from C9 to C30. Gas oils contain straight and branched chain alkanes (paraffins), cycloalkanes (naphthenes), aromatic hydrocarbons and mixed aromatic cycloalkanes. As the boiling ranges of the fractions increase, the levels of polycyclic aromatic compounds (PACs), polycycloparaffins and heteroatoms (N, O, S, and metals) increase, while the levels of paraffins decrease (see Figure 2). Most commercial gas oils contain polycyclic aromatic compounds (PACs). In straight-run gas oil components these are mainly 2 and 3-ring compounds, with relatively low concentrations of 4 to 6-ring PACs. The use of heavier atmospheric, vacuum or cracked gas oil components is likely to result in an increase in the content of 4 to 6-ring PACs, some of which are known to be carcinogenic (CONCAWE, 1996). Blended distillate fuels, in addition to containing the hydrocarbons from their blending stocks, may also contain low concentrations of performance additives such as flow improvers, corrosion inhibitors, defoamers, dyes/markers, anti-oxidants, stability improvers, cetane improvers, detergents and anti-static additives.

Links to additional resources on refining processes and petroleum-related glossaries are presented in Appendix B.

Figure 2. Refinery Stream Composition – Boiling Range vs. General Composition

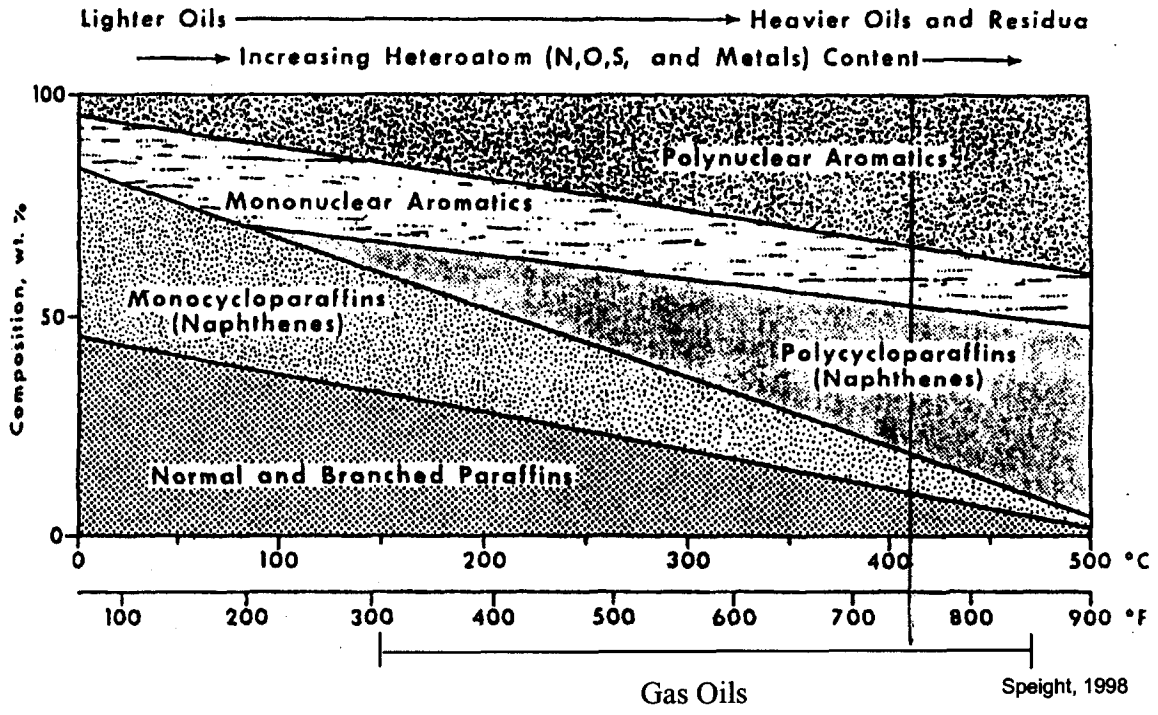

Because they are complex mixtures, the materials in this category are typically not defined by detailed compositional information but instead by process history, physical properties, and product use specifications (ASTM 2001, 2002). Whereas detailed compositional information may be limited, general compositional information can be inferred from the gas oil's physical properties and the type of processing it has undergone, e.g. the higher the boiling temperature range of a fraction, the higher the molecular weight of the oil's components. Similarly, streams that have been "cracked" have higher olefin and aromatic hydrocarbon content while straight run gas oil streams that have undergone a limited amount of additional processing are composed predominantly of saturated hydrocarbons.

Compositional information on 86 gas oil samples (representing 15 of the CAS numbers in this category) showed that the range of hydrocarbon types was:

Olefins: 0 – 19.0%
Saturates: 18 - 86%
Aromatics: 14 - 82 %

As shown in Figure 3, the saturate and aromatic hydrocarbon content of the Gas Oil category members forms a continuum from high saturate content to high aromatic content. Of the 86 samples graphed in Figure 3, one was reported to have an olefin content of 19%. As shown in Figure 4, this was a higher olefin content than any of the other 81 samples, which were all less than 8%, the majority containing less than 2% olefins. Olefins occur at very low levels (if at all) in crude oil, but may be found in higher concentrations in refinery streams that have undergone cracking reactions. The Testing Group thinks the 19%, while not unrealistic, is not representative of the olefin levels found in the majority of the materials within this category. The American Chemistry Councils Higher Olefins Panel's Test Plan on Higher Olefins and the API HPV Consortium's on Gasoline Blending Streams Test Plan both contain information regarding olefin toxicity.

Figure 3. Composition of Representative Samples of Gas Oils and Distillate Fuels

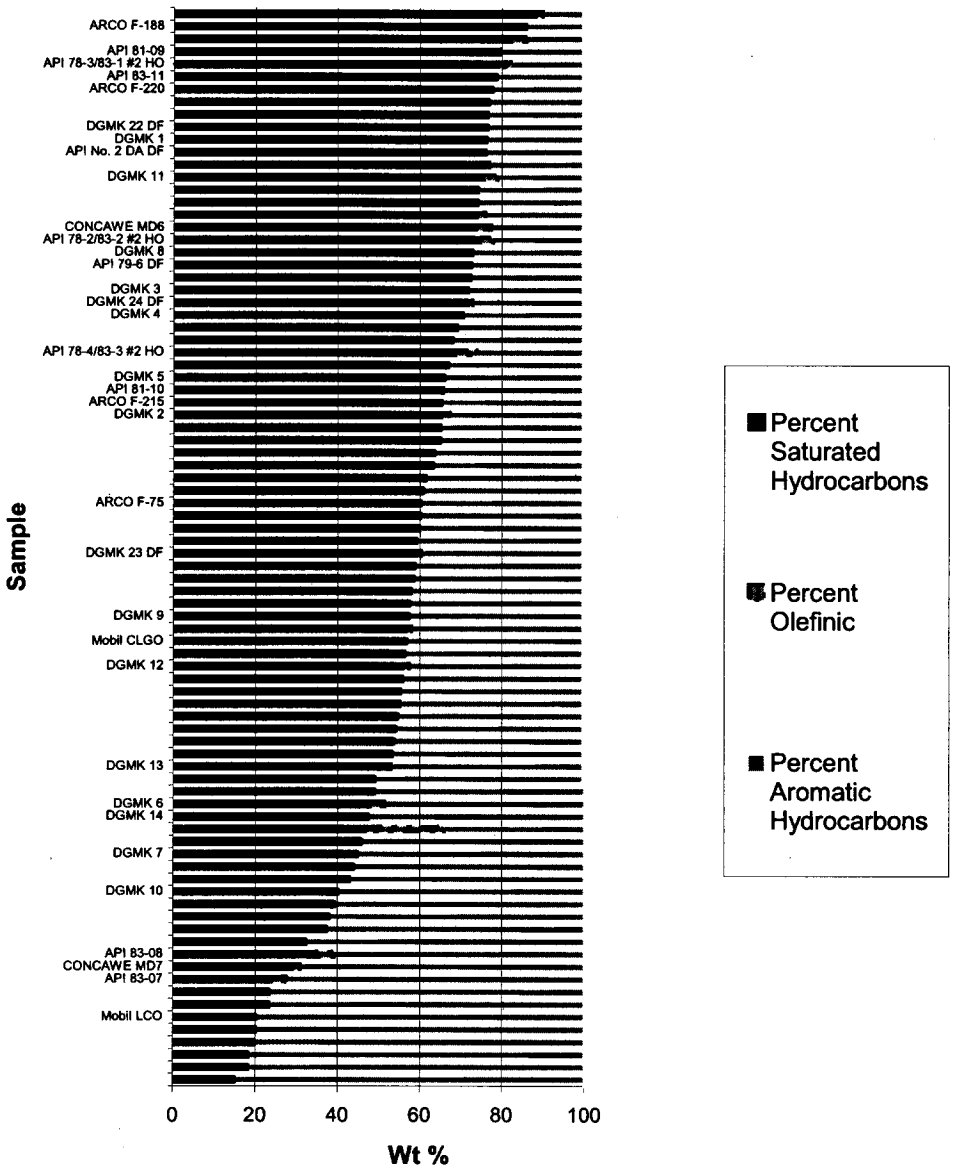

Note: Samples shown with a descriptive title, i.e. "ARCO F-188", are from studies described in the robust summary (Appendix C). Compositional information for 86 samples of gas oils and distillate fuels was obtained from the published literature and relevant company reports.

Figure 4. Olefin Content of Representative Samples of Gas Oils and Distillate Fuels

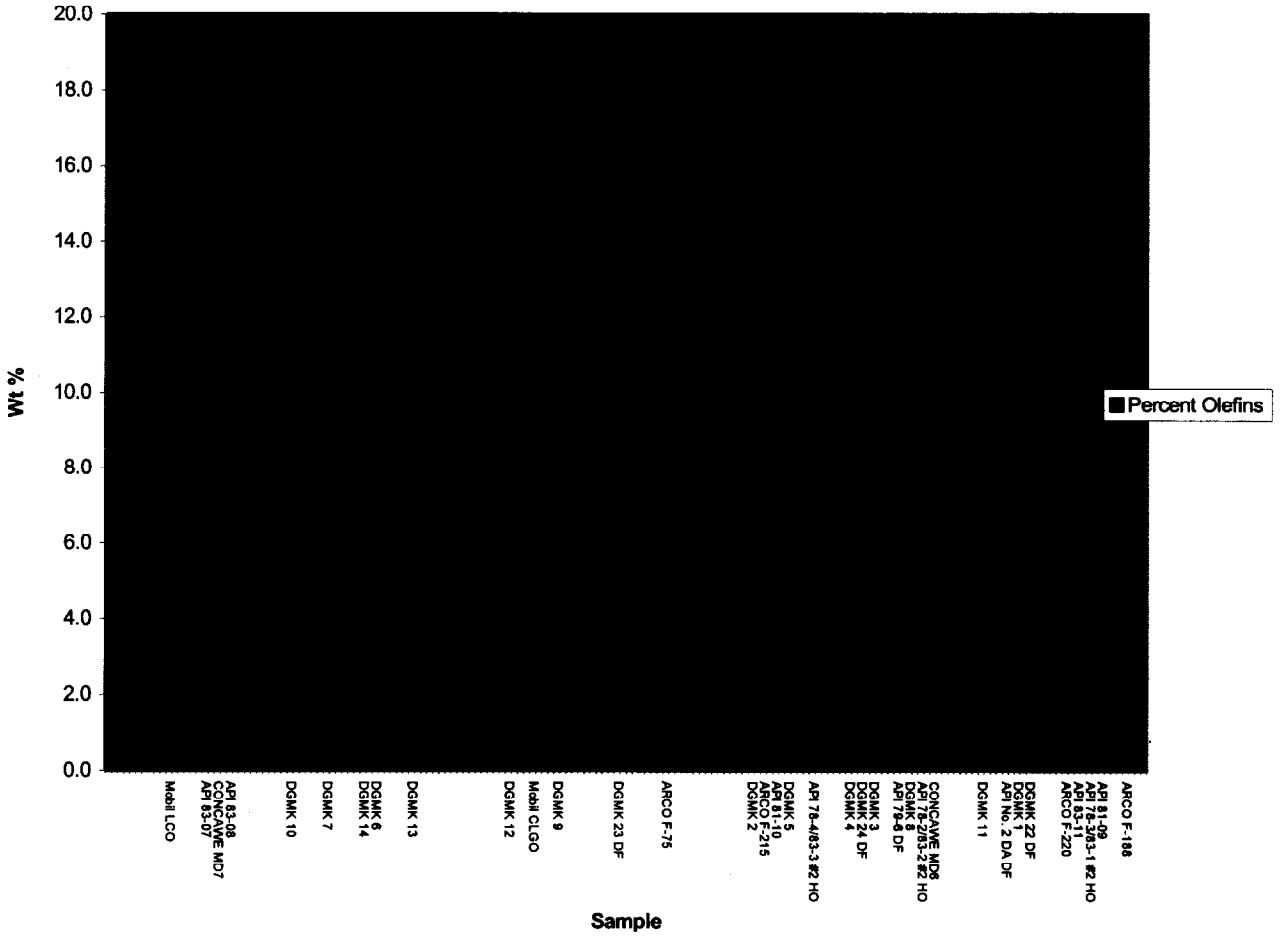

Note: Samples shown with a descriptive title, i.e. "ARCO F-188", are from studies described in the robust summary (Appendix C). Compositional information for 86 samples of gas oils and distillate fuels was obtained from the published literature and relevant company reports.

Category Rationale and Test Material Description

The Testing Group made the following assumptions when analyzing the existing data, proposing testing and identifying potential test materials:

- The materials included in the Gas Oils category are related from both process and physical-chemical perspectives;
- Chemical-oriented groupings based on two primary chemical classes, saturated and aromatic hydrocarbons, can be used to characterize the range of materials found in this category;
- The saturated and aromatic hydrocarbon content of the category members forms a continuum from high saturate content to high aromatic content;
- The properties (physical-chemical properties and toxicities) of the streams in the category are bounded compositionally by streams that are predominantly saturated hydrocarbons and streams that are predominantly aromatic hydrocarbons;

- Knowledge of the biological activity of representative gas oil streams "enriched" in either saturated or aromatic hydrocarbons, combined with data on the distillate fuels, make it possible to predict the toxicity potential for untested gas oil streams with defined saturated or aromatic hydrocarbon characteristics;
- Key parameters when analyzing this category are the percentage of aromatic and saturated hydrocarbons, and for some mammalian endpoints (developmental, reproductive, mutagenic) 3-7 ring polycyclic aromatic compounds (PAC) content.

The Testing Group is proposing to perform mammalian toxicity studies on two gas oil samples that represent the extremes of hydrocarbon composition found in this category; one that has a relatively high saturated hydrocarbons content and one that has a relatively high aromatic hydrocarbons content (see Figure 3 for potential compositional values). Mammalian testing will also be conducted on a representative sample of a No. 2 distillate fuel, the substance in this category with the greatest potential for public exposure.

Because the compositions of the materials in this category vary over time, it is not possible to specify in this Test Plan the exact chemical makeup of the test samples that will be used in the mammalian testing. However, specific analytical data on the test samples will be developed and made available when the samples are obtained. The Testing Group will attempt to maximize each of the test samples 3-7 ring polycyclic aromatic compound (PAC) content. This is being done because of the indications in the existing published literature that the mutagenic, carcinogenic and developmental toxicity of these materials correlate with their 3-7 ring PAC content (Feuston, 1994). The Testing Group also recognizes that while the olefin content of these materials is generally low, selected streams may have measurable levels of olefins. Consequently, the Testing Group will attempt to maximize the olefin content of the high aromatic hydrocarbon sample that is selected for mammalian toxicity testing. This information will supplement the data on olefins contained in the American Chemistry Councils Higher Olefins Panel's Test Plan on Higher Olefins and the API HPV Consortium's on Gasoline Blending Streams Test Plan.

The Testing Group is also proposing to perform biodegradability and aquatic toxicity testing of two gas oil samples. Samples will be chosen that represent the extremes of hydrocarbon composition found in this category; one having a relatively high saturated hydrocarbons content and one having a relatively high aromatic hydrocarbons content. Candidate gas oil streams also will be evaluated for their potential to produce the greatest water soluble fraction of hydrocarbons in aqueous solutions (i.e., low carbon number). In this way the boundaries of the saturated/aromatic hydrocarbons spectrum will be tested using samples expected to produce the greatest bioavailable fraction of petroleum hydrocarbons. Thus, the samples that will be selected for ecotoxicity testing may not be the same samples used for mammalian testing. Existing biodegradation and aquatic toxicity test data on distillate fuels are expected to fall within the range of the biodegradation and toxicity values of the two gas oil streams.

Evaluation of Existing Health Effects Data and Proposed Testing

General Evaluation

Many studies have been reported for this category of materials, ranging from acute to long-term carcinogenicity studies. Additional reviews by various expert panels have also been published (ATSDR, 1995; CONCAWE, 1991, 1996, 2001; IARC, 1988). Because fuel oils and transportation fuels of the same grade (e.g. No. 2 home heating oil and No. 2 diesel fuel) are virtually indistinguishable on the basis of their gross physical or chemical properties (IARC, 1988), data generated on either material can be used to characterize the toxicity of both materials.

The Test Plan addresses the health effects endpoints of the category by:

- Evaluating the extensive toxicology database for the gas oil refinery streams and the distillate fuels,
- Using read-across information whenever possible among category members, and
- Proposing the minimal amount of toxicity testing needed to characterize the category boundaries and test the hypothesis that the reproductive toxicity of a gas oil stream correlates to its 3-7 ring PAC content.

Acute Toxicity

Gas Oil Streams

- **Streams Composed Predominantly of Aromatic Hydrocarbons**
  Oral LD_{50}s for two gas oils (72.4% & 60.8% aromatic hydrocarbons) ranged from 3.2 to 7.18 g/kg_{bw} (API, 1982a; 1985d). The dermal LD_{50}s of the two gas oils were reported to be >2.0 g//kg_{bw} (API, 1982a; 1985d). Inhalation LC_{50} values for the same two samples were 5.4 and 4.65 mg/l (API, 1986a,b). When tested in rabbits for skin irritation, both streams produced "moderate" to "severe" irritation (API, 1982a; 1985d). When tested for eye irritation in rabbits, the two gas oils produced Draize scores of 1.7-3.2 and 0-2.0 (unwashed and washed eyes) at 24 hours (API, 1982a; 1985d). The same two materials were reported to be "not sensitizing" when tested in guinea pigs (API, 1982a, 1985d). A skin irritation test on a third sample (69.1% aromatic hydrocarbons) produced "moderate" to "severe" erythema in two of three animals at 60 minutes (Exxon, 1996b).

- **Streams Composed Predominantly of Saturated Hydrocarbons**
  Oral and dermal LD_{50}s of three samples of gas oils (65.6% - 79.4% saturated hydrocarbons) were >5 g/kg_{bw} and >2.0 g/kg_{bw}, respectively (API, 1982b,c; 1985e). In all the studies, clinical signs were similar irrespective of the test material. Inhalation LC_{50} values for the same three samples ranged from 1.78 to 7.64 mg/l (API, 1983a,b; 1987a). In rabbits, the three materials were reported to produce "moderate" to "severe" irritation on both intact and abraded skin (API, 1982b,c; 1985e). When tested for eye irritation in rabbits, the three gas oils produced Draize scores of 1.0 – 2.0 and 0.0 (unwashed/washed eyes) at 24 hours (API, 1982b,c; 1985e). The three materials, when tested in guinea pigs, were not skin sensitizers (API, 1984b,c; 1985e). An additional sample of a gas oil (73.7% saturated hydrocarbons), when tested for dermal irritation elicited "minimal" transient irritation (Exxon, 1996b).

Distillate Fuels

The oral LD_{50} in Sprague-Dawley rats of a market-place sample of diesel fuel (72.6% saturated hydrocarbons) was found to be 9.0 ml/kg_{bw} (95% confidence interval of 5.58 to 14.51 ml/kg) (API, 1980d). The dermal LD_{50} in New Zealand white rabbits of the same test material was reported to be greater than 5 ml/kg_{bw} (API, 1980d). When tested for skin irritation, the same market place sample was judged "extremely irritating" (API, 1980d). However, the same sample was found to be non-irritating and non-sensitizing in an eye irritation study in rabbits and a sensitization study in guinea pigs, respectively (API, 1980d).

Oral LD_{50}s of three samples of home heating oils (containing 67.8% - 79.2% saturated hydrocarbons) ranged from 14.5 to 21.2 ml/kg_{bw}, while the dermal LD_{50}s were all >5 gm/kg_{bw} (API, 1980a,b,c). In rabbits, the three materials produced primary skin irritation scores ranging from 3.37 to 3.98 (API, 1980a,b,c). When tested for eye irritation in rabbits, the three home heating oils produced Draize scores of 0 – 0.7 (rinsed eyes) and 0 –1.33 (unrinsed eyes) (API, 1980a,b,c).

Summary: No additional testing is planned. Multiple acute toxicity studies have been reported on both high saturate and high aromatic gas oil refinery streams high in either saturated or aromatic hydrocarbons, as well as on blended distillate fuels. The Testing Group thinks the existing data is sufficient to characterize the acute toxicities of this category of materials.

Repeat-Dose Toxicity

Six 28-day and two 90-day dermal studies have been reported for various gas oils. Two 28-day inhalation studies have also been conducted. In preparing this Test Plan, the approach of the Testing Group has been to review the available toxicology studies and include in the robust summary a detailed description(s) of the one study or a small number of studies that best address each SIDS Level 1 endpoint. Other studies are cited in the appropriate "Remarks" section of the Robust Summary and are intended to supplement the readers' knowledge. Therefore, the attached Gas Oils Robust Summary (Appendix C) contains complete summaries for two 28-day and both 90-day studies done via the dermal route. Results from the remaining four 28-day dermal studies are summarized on pages 34-35 of the Gas Oils Robust Summary. Complete summaries have also been included in the Robust Summary for the two 28-day inhalation studies.

Gas Oils Streams

- **Streams Composed Predominantly of Aromatic Hydrocarbons**
  Dose levels of 8, 25,125, 500 or 1,250 mg/kg_{bw}/day of a light cycle oil (distillates, light catalytic cracked; 79.8% aromatic hydrocarbons) were applied undiluted to the skin of male and female rats (Mobil, 1985). The test material was applied 5x/week for up to 13 weeks. After two weeks of exposure, the rats dosed with 1,250 mg/kg_{bw}/day were terminated due to poor growth and appearance. Rats dosed with 500 mg/kg_{bw}/day for 13 weeks had marked reductions in body weight (males only) and thymus size and weight, with decreased lymphocytes in the thymus. Males were more affected than females. Males dosed at 125 mg/kg_{bw}/day for 13 weeks had only slightly reduced body and thymus weights. The investigators judged the thymus weight differences to be attributable to a depletion of lymphocytes within the thymus. The livers of both males and females in the 500 mg/kg_{bw}/day groups were slightly larger than controls. The 500 mg/kg_{bw}/day males were found to have more fat in the liver cells than the controls. At the sites of application, light cycle oil caused marked, persistent effects including severe erythema and edema with visibly thick, stiffened skin. Microscopic examination of the skin from the 500 mg/kg_{bw}/day group revealed moderate chronic inflammatory changes of the skin and hair follicles. The investigators judged the NOAELs for males and females to be 25 and 125 mg/kg_{bw}/day, respectively.

  In a different study, a light catalytic cracked gas oil (72.4% aromatic hydrocarbons) was tested in a four-week dermal study using rabbits (API, 1985a). Undiluted test material was applied 3x/week to the skin of 5 male and 5 female rabbits at dose levels of 250, 500 and 1000 mg/kg_{bw}. Aside from skin irritation, there were no treatment-related clinical signs during the study. Mean body weights were also not affected by the test material. Treatment related skin irritation (up to "severe") was seen at the site of application. There were no treatment-related effects on hematological or clinical chemical values, or on absolute or relative organ weights. The only gross pathology findings that were treatment-related were skin changes found at the site of test material application. Microscopic examination of tissues from high dose group animals surviving to termination found moderate to severe proliferative and inflammatory changes in the skin of all animals. Associated with these skin changes was an increased granulopoiesis of the bone marrow, attributed to the stress of the severe skin irritation.

- **Streams Composed Predominantly of Saturated Hydrocarbons**
  A gas oil containing 85.86% saturated hydrocarbons was applied daily, 5x/week for 4 weeks to the skins of Sprague-Dawley rats (UBTL, 1992). Dose levels used included 0.05, 0.25 & 1.0 ml/kg_{bw}/day. No mortalities or dose-related clinical observations (except for skin irritation) were seen during the study. Body weights were unaffected by exposure to the test material. A dose-related increase in the degree of skin irritation was reported. The only treatment-related finding at necropsy was skin irritation. No treatment related effects were seen on a variety of hematological and clinical chemistry parameters. Furthermore, organ weights, organ weight/body weight ratios and organ/brain weight ratios were unaffected by exposure to the test material. Histological examination of tissues from the control and high-dose groups found no compound-related effects, other than dermal effects related to the irritating properties of the test material. The report authors concluded that the NOAELs for skin irritation and systemic toxicity were <0.05 ml/kg_{bw}/day and 1 ml/kg_{bw}/day, respectively.

  A coker light gas oil (56.9% saturated hydrocarbons) was applied to the skin of male and female rats at dose levels of 30, 125, 500 and 2000 mg/kg_{bw} (Mobil, 1991). The test material was applied 5 days each week for 13 weeks to animals in the 30 and 125 mg/kg_{bw} groups. Due to skin irritation and moribund conditions, the animals in the 500 and 2000 mg/kg_{bw} groups were sacrificed during weeks 9 and 2, respectively.

  During the weeks they were on study, perineal staining and skin irritation (generally severe) were seen in all treated animals. The body weights of the 2000 and 500 mg/kg_{bw} groups (both sexes) were significantly less than controls. Body weights of males in the 125 mg/kg_{bw} group were less than controls from day 36 onwards. Clinical chemical analyses at 13 weeks showed apparently compound-related effects on a number of parameters. At 13 weeks, increases in white blood cells and the number of segmented neutrophils were found in both male and female high dose (125 mg/kg_{bw}) animals. An increase in lymphocytes was found in both the 125 mg/kg_{bw} group (both sexes) and the 30 mg/kg_{bw} group (females). A reduction of approximately 10% was found in the absolute thymus weights of the

male animals in the 30 mg/kg$_{bw}$ group. In the 125 mg/kg$_{bw}$ group (males and females) a number of significant differences in absolute and relative weights were noted for several organs. The primary treatment-related changes seen during the histopathological examinations were severe skin irritation and slight effects on bone marrow and kidneys. The bone marrow effects included a severe reduction in erythropoietic cells and megakaryocytes (2000 mg/kg$_{bw}$) and changes in megakaryocytes, i.e. larger, vacuolated, and/or darkened nuclei and/or clumped cell effects (2000, 500 and 125 mg/kg$_{bw}$). Kidney effects included basophilia in the tubular cortex (predominantly in males), focal inflammation, and dilation of ducts in the medulla and tubules in the cortex.

Two gas oils (79.4% & 65.6% saturated hydrocarbons) have been tested in a four-week inhalation study (API, 1986f). In the study, Sprague-Dawley rats were exposed to aerosols of each of the gas oils at a nominal concentration of 25 mg/m^3. Exposures were for 6 hours/day, 5 days/week. For both materials, there were no treatment-related body weight changes or clinical observations. Apart from moderately increased leukocyte counts in animals exposed to the material containing 65.6% saturated hydrocarbons, no treatment related effects were found in any of the hematological or clinical chemical parameters that were measured. Nor were there any test material-related macroscopic pathology findings for either material. Subacute inflammation of the respiratory mucosa lining (trace – mild rhinitis) was observed microscopically in some of the animals exposed to the gas oil containing 65.6% saturated hydrocarbons.

Distillate Fuels

Diesel fuel No. 2 (60.41% saturated hydrocarbons) was applied daily, 5x/week for four weeks, to the skin of Sprague-Dawley rats (UBTL, 1986). The material was applied at dose levels of 0.5, 2.0 and 5.0 ml/kg$_{bw}$/day. There were no deaths or any other treatment-related effects observed during the study, with the exception of an effect on body weights and the occurrence of skin irritation. After the second week of the study, the body weights of the mid- and high dose males were less than those of the controls, with the difference persisting throughout the study. At the end of the study the weight gains of the mid and high dose males were 43% and 13% respectively of those of the controls. Skin irritation occurred at all dose levels, ranging from moderate (low dose) to severe (mid and high dose).

A diesel fuel was applied to the skin of New Zealand white rabbits 5 days/week for 3 weeks at dose levels of 0.2, 0.67 and 2.0 g/kg$_{bw}$/day (IITRI, 1984). Severe skin irritation was seen in all the dosed groups. One of ten males and two of the ten females in the highest dose group died prematurely. A variety of compound-related effects were seen.

One, 3 & 10 ml/kg$_{bw}$/day of a No. 2 home heating oil (67.8% saturated hydrocarbons) was applied undiluted to the skin of male and female New Zealand white rabbits (API, 1980c). The test material was applied daily for 5 days, the animals were given a two day dose-free rest and then the test material was applied daily for an additional 5 days. Severe skin irritation was seen at all dose levels. Two of eight and 7/8 animals died prematurely in the 3 and 10 ml/kg$_{bw}$ /day groups, respectively. The only significant histological findings were those associated with the severe skin lesions.

Two additional samples of home heating oils (containing 79.2% and 73.4% saturated hydrocarbons) have been tested for repeat-dose toxicity (API, 1980a,b). In these studies, material was applied to the skin of rabbits for two weeks. Doses in the first study were 2.5, 4 and 10 ml/kg$_{bw}$/day, while those in the second study 1, 2.5 and 10 ml/kg$_{bw}$/day. Both materials produced severe skin irritation at all dose levels. In the first study, 8/8 animals receiving 10 /kg$_{bw}$/day died prematurely. In the second study, 1/8 and 6/8 animals died prematurely in the 2.5 and 10 ml/kg$_{bw}$/day groups, respectively.

The market-place sample of diesel fuel that was summarized in the acute toxicity section was also tested in a two week repeat-dose study (API, 1980d). Applied to the skin of rabbits for two weeks at dose levels of 4 and 8 ml/kg$_{bw}$/day, the material produced a 67% mortality rate in the 8 ml/kg$_{bw}$/day group.

Carcinogenicity

In addition to the repeat-dose studies discussed above, a number of dermal carcinogenicity studies have been performed on gas oils and distillate fuels. Although carcinogenicity is not a required endpoint of the HPV

program, the Testing Group believes the results may be useful in evaluating the repeated dose endpoint. These studies have been fully summarized and reviewed elsewhere (ATSDR, 1995; CONCAWE, 1996; IARC, 1988). The general conclusions that can be drawn from the animal carcinogenicity studies are:

- Gas oils and distillate fuels are potential skin carcinogens after repeated skin application.
- When applied repeatedly to the skin, carcinogenic gas oils and distillate fuels are associated only with skin tumors and not with an increase in systemic tumors.
- The skin carcinogenicity of the gas oils and distillate fuels correlates with 3-7 ring PAC content.
- Skin tumors produced by materials containing low or no PAC is likely due to a non-genotoxic promotion effect and only observed in the presence of sustained severe skin irritation.

Gas Oils Streams

- **Streams Composed Predominantly of Aromatic Hydrocarbons**
  A cracked gas oil (69.7% aromatic hydrocarbons) was applied to the skins of male C3H mice 2, 4 or 7 days/week for 104 weeks (Exxon, 1996a). The test material was applied either undiluted or at 50% or 28.5% dilutions in mineral oil. The concentration and dosing frequencies were adjusted to ensure that each animal received the same total weekly dose of test material irrespective of dosing frequency. Thus, the 100% animals were dosed 2x/week, while the 50% and 28.5% groups were dosed 4x/week and 7x/week respectively. Survival was less in the treated groups compared to the negative controls; at the lower two concentrations (28.5 and 50 %) the difference was statistically significant. Dermal irritation occurred in the groups exposed to the gas oil, scores ranging from 0.0 to 4.0. There were no other treatment-related clinical findings. Treatment related findings at post mortem were limited to dermal irritation. A variety of skin tumors developed in the positive control and gas oil treated groups. Tumor types found included squamous cell carcinomas, fibrosarcomas, melanoma (only 1 treated animal) and papillomas.

  Two samples of gas oils with a high aromatic content (48.3% & 55.1% aromatic hydrocarbons) have been tested in an initiation-promotion assay in male CD-1 mice (DGMK, 1993). Animal survivals were not effected by exposure to the gas oil samples. During both the initiation and promotion phases, the gas oil samples caused slight to moderate skin irritation which was found to be reversible. There were no other treatment-related clinical findings. Of the two samples, both appeared to have weak initiating potentials, while only one showed a weak promoting effect.

- **Streams Composed Predominantly of Saturated Hydrocarbons**
  A straight run, hydrotreated gas oil (73.8% saturated hydrocarbons) was applied to the skins of male C3H mice 2, 4 or 7 days/week for 104 weeks (Exxon, 1996a). The test material was applied either undiluted or at 50% or 28.5% dilutions in mineral oil. The concentration and dosing frequencies were adjusted to ensure that each animal received the same total weekly dose of test material irrespective of dosing frequency. Thus, the 100% animals were dosed 2x/week, while the 50% and 28.5% groups were dosed 4x/week and 7x/week respectively. Survival figures of the gas oil treated groups were comparable to that seen in the negative control group. Dermal irritation scores in the gas oil groups ranged from 0.0 to 4.0. There were no other treatment-related clinical findings. Dermal irritation was the only treatment-related finding at post mortem. A variety of skin tumors developed in the positive control and the 100% and 28.5% gas oil groups. The tumor incidence was highest in the group in which skin irritation was greatest. The incidence of the tumors in the gas oil groups was much lower than that seen in the study of a cracked gas oil described above.

  Three gas oils with high saturated hydrocarbon contents (57.5% - 76.4%) have been tested in an initiation-promotion assay in male CD-1 mice (DGMK, 1993). Animal survivals were not effected by exposure to the gas oil samples. During both the initiation and promotion phases, two of the three gas oil samples caused reversible, slight to moderate skin irritation. There were no other treatment-related clinical findings. Of the three samples, two appeared to have weak, if any initiating potentials. And of those two materials, one had a very weak, if any promoting potential.

Distillate Fuels

A dermal carcinogenicity study of a diesel fuel (saturate content unknown) in C3H mice has been reported by IITRI (IITRI, 1985). Over the lifetime of the animals, 50µl of undiluted test material was applied 2x/week to the

shaved skin of male mice. There was a significant increase in the incidence of malignant skin tumors (squamous cell carcinoma or fibrosarcoma) in the treated mice compared to the controls. Other lesions of the treated skin included sloughing of the skin and lesions resembling infection, both of which were seen more frequently in the treated animals.

A sample of a diesel fuel (76.6% saturated hydrocarbons) has been tested in an initiation-promotion assay in male CD-1 mice (DGMK, 1993). Animal survivals were not effected by exposure to the diesel fuel. The study's authors concluded that the diesel fuel sample might be a promoter.

Summary: No additional repeat-dose testing is planned for either gas oils or distillate fuels. Multiple repeat-dose toxicity studies have been reported on a variety of gas oils and distillate fuels. Petroleum hydrocarbons, and specifically gas oils and distillate fuels have been shown to produce dermal and systemic effects when applied dermally. The Testing Group thinks the existing data are sufficient to characterize the repeat-dose toxicity of this category of materials.

***In-Vitro* (Mutagenicity)**

Gas Oils Streams

- **Streams Composed Predominantly of Aromatics Hydrocarbons**
  Modified Ames assays on three gas oils (52.4% - 59.8% aromatic hydrocarbons) produced mutagenicity indices ranging from 7.6 to 9.3 (DGMK, 1991).

  A sample of a light catalytic cracked gas distillate (72.4% aromatic hydrocarbons) produced mixed results in a mouse lymphoma assay (API, 1985i). The report's authors concluded that the sample produced a positive response in the presence of S-9 activation but was not mutagenic in the absence of activation. A second mouse lymphoma assay on a different sample of light catalytic cracked distillate (60.8% aromatic hydrocarbons) produced a positive response both with and without S9 activation (API, 1985f). Testing of a separate aromatic fraction from another gas oil sample produced negative results with and without S9 activation (API, 1987b).

  A sample of a light catalytic cracked gas distillate (72.4% aromatics) was tested with and without S9 activation in the sister chromatid exchange (SCE) assay using Chinese Hamster Ovary (CHO) cells (API, 1988b). While the investigators did find an increase in SCEs above the spontaneous background level, there was no clear dose-response. Consequently the report concluded that the light catalytic cracked gas distillate test sample was equivocal in the test system.

- **Streams Composed Predominantly of Saturated Hydrocarbons**
  Results of modified Ames assays on eleven gas oils (saturates content 51.7% to 79.0%) were reported by DGMK (1991). The eleven test samples had mutagenicity indices ranging from 0.7 to 4.0.

  Three samples of gas oil streams (65.6 - 79.4% saturated hydrocarbons) have been tested in the mouse lymphoma assay, with and without activation (API, 1984a;1985g,h,j;1986d;1987e). Two of the samples have undergone multiple tests. The six separate assays on these three samples have produced, with one exception, positive results, with or without S9 activation. Testing of a separate saturate fraction from one of the samples produced negative results with and without S9 activation (API, 1987c).

  A sample of a hydrodesulfurized middle distillate (65.6% saturates) was tested with and without S9 activation in the sister chromatid exchange (SCE) assay using Chinese Hamster Ovary (CHO) cells (API, 1988c). While the sample was negative without S9 activation, when tested with S9 activation, the results were equivocal, with no clear dose-response.

Distillate Fuels
Results of modified Ames assays on three diesel fuels (59.4% - 76.6% saturated hydrocarbons) were reported by DGMK (1991). The three test samples had mutagenicity indices ranging from 1.7 to 3.9.

An additional Ames assay has been reported on a diesel fuel sample (API, 1978). The diesel fuel was negative in these assays, with and without rat liver S9 activation. The same report also included the results of a mouse lymphoma assay on a No. 2 –D fuel (76.1% saturated hydrocarbons) (API, 1978). With and without activation the test material was negative. However, a sample of home heating oil (67.8% saturated hydrocarbons) was positive with and without S9 activation (API, 1979a).

***In-Vivo* (Chromosomal Aberrations)**

Gas Oils Streams

- **Streams Composed Predominantly of Aromatic Hydrocarbons**
  An *in vivo* bone marrow cytogenetic test in Sprague-Dawley rats has been conducted on light catalytic cracked distillate (72.4% aromatic hydrocarbons) (API, 1986e). The study was conducted according to the OECD Guideline No. 475. The authors of the study report concluded the test material did not induce a significant increase in the percentage of aberrant cells in either male or female animals. This same test material was positive when tested in an *in vivo* sister chromatid exchange assay using mice (API, 1989). A second *in vivo* bone marrow cytogenetic test on a different sample of light catalytic cracked distillate (60.8% aromatic hydrocarbons) was also negative (API, 1985b).

- **Streams Composed Predominantly of Saturated Hydrocarbons**
  Three samples of gas oil streams (65.6% - 79.4% saturated hydrocarbons) have been tested in *in vivo* bone marrow cytogenetic tests using Sprague-Dawley rats (API, 1984a; 1985c,h; 1986c). The assays on these three samples produced consistently negative results. One of the samples (65.6% saturated hydrocarbons) also produced negative results when tested in an *in vivo* sister chromatid exchange assay using mice (API, 1988a).

Distillate Fuels
A sample of a No. 2-distillate fuel (76.1% saturated hydrocarbons) has been tested in an *in vivo* bone marrow cytogenetic test using male rats (API, 1978). Similar aberrations were observed in both the treatment and negative control groups, the only difference being the frequency of the aberrations. Based on the total number of cells with aberrations and the mean percent aberrations, the report concluded that at dose levels of 2 and 6 ml/kg_{bw} diesel fuel was clastogenic.

The same distillate fuel was also tested in a dominant lethal assay in male CD-1 mice (API, 1980e). Male mice were exposed by inhalation to diesel fuel at airborne concentrations of 100 and 400 ppm. Exposures were for 6 hours a day, 5 days per week for 8 weeks (40 doses). Following completion of the exposures, the males were sequentially mated to two females per week for 2 weeks. Two weeks after the middle of their mating week, females were killed and necropsied and the uteri examined. A variety of reproductive parameters were calculated. The report concluded that the test material did not cause any significant pre- or post implantation losses when compared to the negative control.

Summary: No additional testing is planned. Existing *in vitro, in vivo* and carcinogenicity studies are adequate to characterize the genotoxicity of gas oils and distillate fuels.

Reproductive/Developmental Toxicity

Gas Oils Streams

- **Streams Composed Predominantly of Aromatic Hydrocarbons**
  In a developmental toxicity study, a light cycle oil (79.8% aromatic hydrocarbons) was applied daily to the skin of pregnant Sprague-Dawley rats on days 0-19 of gestation (Mobil, 1988). Dose levels administered included: 25, 50, 125, 250, 500 and 1000 $mg/kg_{bw}/day$. All animals were euthanized on day 20. In the dams, erythema and flaking of the skin were observed in all gas oil exposed groups. Skin effects were observed in all but the 25 mg/kg_{bw} group. At doses greater than 25 mg/kg_{bw} there was a decrease in body weight and body weight gain compared to the controls, with an accompanying reduction in food consumption. There were no treatment-related findings at necropsy. Blood levels of triglycerides were increased in a dose-related manner in the 250, 500 and 1000 mg/kg_{bw} groups. Fetal

body weights were reduced in the 500 and 1000 mg/kg$_{bw}$ groups, with only the reduction in the 1000 mg/kg$_{bw}$ group being statistical significant. There were no significant increases in resorptions, soft tissue variations and malformations, and skeletal malformations in any of the dose groups.

- **Streams Composed Predominantly of Saturated Hydrocarbons**
  A developmental toxicity screening study has been reported on a gas oil composed of 65.4% saturated hydrocarbons (UBTL, 1994a). Undiluted test material was applied daily on days 0 to 20 of gestation to the clipped skin of resumed-pregnant female rats. Dose levels included 50, 150 and 500 mg/kg$_{bw}$/day. Signs of maternal toxicity considered by the study director to be related to administration of the test material included decreased body weights and body weight changes at a dose of 500.0 mg/kg$_{bw}$. Test material related dermal irritation was observed in all of the dose groups. Signs of developmental toxicity considered to be related to administration of the test material included lower pup body weights on Lactation Days 0 and 4 at doses of 150.0 and 500.0 mg/kg. The proportion of pups surviving to Lactation Day 4 was decreased at a dose of 500.0 mg/kg. Based on the results of this study, the study director concluded the no-observable-effect level (NOAEL) for maternal toxicity was less than 50.0 mg/kg$_{bw}$ (dermal irritation at 50.0 mg/kg$_{bw}$ and decreased body weight at 500.0 mg/kg$_{bw}$). The no-observable-effect level (NOAEL) for signs of developmental toxicity was 50.0 mg/kg$_{bw}$.

  A second developmental screening study, similar in design to the one described in the preceding paragraph, has been reported on a gas oil containing 77.7% saturated hydrocarbons (UBTL, 1994b). Dose levels in this second study were 125, 250 and 1000 mg/kg$_{bw}$/day. Dams in the 125 and 250 mg/kg$_{bw}$ dose groups were administered test material on days 0-20 of gestation. Dams in the 1000 mg/kg$_{bw}$ were dosed only on days 5-9 of gestation. Signs of maternal toxicity considered by the study authors to be related to be compound-related included dermal irritation (all dose groups), decreased body weights, body weight changes, and food consumption in the 1,000.0 mg/kg$_{bw}$ dose group. The study authors also concluded there were no signs of developmental toxicity related to administration of the test material in any of the dose groups. Based on the results of this study, the no-observable-effect level (NOEL) for maternal toxicity was less than 125 mg/kg (dermal irritation at 125, 250 and 1000 mg/kg; decreased body weights, body weight changes and food consumption at 1000 mg/kg). In the groups of animals administered 125 or 250 mg/kg$_{bw}$ of the test material, the no-observable-effect level (NOEL) for maternal toxicity and signs of developmental toxicity was concluded to be 250.0 mg/kg$_{bw}$. Administration of the test article at a higher dose level (1,000 mg/kg$_{bw}$), but for a shorter dosing period, (Gestation Days 5 to 9), produced signs of maternal toxicity without signs of developmental toxicity.

Distillate Fuels
A developmental toxicity study has been reported on a diesel fuel consisting of 76.1% saturated hydrocarbons (API, 1979b). In the study, groups of presumed-pregnant Sprague-Dawley rats were exposed to nominal atmospheric concentrations of 100 and 400 ppm. Exposures were for 6 hours each day from day 6 through day 15 of gestation. On day 20 all the animals were killed and both dams and fetuses thoroughly examined. One third of the fetuses were fixed for soft tissue examination. The remaining fetuses were examined for skeletal abnormalities. There were no deaths during the study and all animals were normal in appearance throughout. The 400 ppm group had a reduced food intake during days 7-15 of gestation. No treatment-related differences were found in a variety of parameters, including sex ratios of the fetuses, number of implantation sites, resorptions, and live fetuses. With the exception of subcutaneous hematomas that occurred at a higher rate in the test article exposure groups, there were no test article-related abnormalities found in either the soft tissues or skeletons of the fetuses.

Summary: Reproductive/developmental screening studies (OECD 421) will be performed on two representative gas oil samples; one that has a relatively high saturated hydrocarbons content and one that has a relatively high aromatic hydrocarbons content. A No. 2 distillate fuel (the substance in this category with the greatest potential for public exposure) will also be tested in a reproductive/developmental screening study (OECD 421). After reviewing the available data, the Testing Group thinks there is adequate developmental toxicity data on gas oils and distillate fuels. However, none of the developmental studies provides data on pre-mating exposure of males or females. This lack of reproductive toxicity data on gas oils suggests the need for additional studies on representative samples of gas oils that span the range of saturated and aromatic hydrocarbons composition. Similarly, the lack of reproductive data on a distillate fuel and the positive result in the *in vivo* bone marrow cytogenetic assay support the reproductive

toxicity testing of a distillate fuel. The Testing Group thinks the dermal route of exposure is appropriate for use in these studies since:

- the dermal route is a major route of human exposure,
- systemic effects have been seen in numerous studies of petroleum hydrocarbons done using the dermal route of exposure,
- historic data in the rat shows absorption of PACs via both the dermal and oral routes of exposure, and
- the dermal route of exposure minimizes the potential "first pass" metabolism by the liver of the biologically available/active impurities.

However, the Testing Group recognizes that the irritating properties of these materials may adversely affect the conduct of the studies. Therefore, when designing the studies, the Testing Group will include techniques to reduce the dermal irritation and associated stress (e.g., rotating dose sites or mixing the test material with mineral oil) and will consider the results of a pilot study before finalizing the protocols for the full studies.

While the Testing Group is proposing to perform a Reproductive/developmental screening study (OECD 421) on a distillate fuel, the Group is aware that scientists with oil companies in the European Union have also identified the need for a reproductive toxicity study on a distillate fuel. The Testing Group will discuss a joint testing effort with the European group. This may result in a more in depth study protocol than the OECD 421 test being proposed in this Test Plan. The Agency will be notified if a collaborative effort is agreed upon.

Evaluation of Existing Physico-Chemical and Environmental Fate Data and Proposed Testing

The physicochemical endpoints for the EPA HPV chemical program include melting point, boiling point, vapor pressure, octanol/water partition coefficient (log Kow), and water solubility. Environmental fate endpoints include photodegradation, hydrolysis, environmental transport and distribution (fugacity), and biodegradation. Although some data for products in this category exist, not all of these endpoints are defined and a consensus database for chemicals that represent products in this category does not exist. Therefore, calculated and measured representative data have been identified and a technical discussion provided, where appropriate. The EPIWIN© computer model, as discussed in the US EPA document entitled "The Use of Structure-Activity Relationships (SAR) in the High Production Volume Chemicals Challenge Program" has been used to calculate physical-chemical properties of representative constituents of gas oils (EPA, 2000).

The substances covered under this HPV testing plan are mixtures of differing compositions. Because of the diversity of compounds encompassing gas oils, it is not feasible to model the physicochemical endpoints for each potential compound. Rather, modeling efforts were directed towards those hydrocarbon components of the gas oils that would most likely disperse to various environmental media. Since molecular weight and structural conformation determine in large part the solubility and vapor pressure characteristics of the hydrocarbons, representative isomeric structures of the lower (C_9) and higher molecular weight (C_{30}) hydrocarbons of each group of the chemical species found in these materials (paraffinic, naphthenic, olefinic and aromatic) were modeled for relevant physicochemical and fate processes. This provided a range of values that were considered to encompass the majority of the compounds in gas oils.

<u>Physico-Chemical Data</u>

Melting Point

For complex mixtures like petroleum products, melting point may be characterized by a range of temperatures reflecting the melting points of the individual components. To better describe the physical phase or flow characteristics of petroleum products, the pour point is routinely used. The pour point is the lowest temperature at which movement of the test specimen is observed under prescribed conditions of the test (ASTM, 1999). The pour point temperature falls as an oil's viscosity increases. Pour point values for a variety of gas oil types have been reported in the literature. The pour point of two samples of a light catalytic-cracked gas oil (60.8% - 79.8% aromatic hydrocarbons) were measured by API (1987d) to be –15 ° and –12 °C. The pour points of various distillate fuels (59.4% - 79.2% saturated hydrocarbons) were found by CONCAWE (1996) to range from –6 ° to 0 °C for an automotive gas oil (diesel), a heating oil, and a marine distillate fuel. The pour point values for four diesel fuels reported by Jokuty et al. (2002) ranged from –50° to –14 °C. The wide range in pour point values

for distillate fuels is likely due to fuel additives that increase the flow characteristics of products distributed to cold regions.

Summary: No additional testing is proposed. The pour points of various gas oils and distillate fuels have been adequately measured.

Boiling Point
Gas oils do not have a single numerical value for boiling point, but rather a boiling or distillation range that reflects the individual components in the hydrocarbon mixture. Distillation ranges for a variety of gas oils have been reported for a number of blended gas oil products (CONCAWE, 1996; Jokuty et al., 2002) and individual gas oil production streams (API, 1987d). Typical distillation ranges for blended fuels are 160 to 390°C for an automotive gas oil (diesel fuel), 160 to 400 °C for a heating oil, and 170 to 420 °C for a distillate marine fuel (CONCAWE, 1996). Jokuty et al. (2002) gave distillation ranges from three sources of diesel fuel as 141 to 320 °C (diesel fuel – Alaska), 246 to 388 °C (diesel fuel – Canada), and 174 to 352 °C (diesel fuel – southern U.S.A.). Typical low end and high end distillation temperatures for gas oil production streams analyzed by API (1987d) were 172 and 344 °C for a hydrodesulfurized middle distillate (65.6% - 79.4% saturated hydrocarbons), 185 and 391 °C for a straight-run middle distillate (78.8 saturated hydrocarbons), and 185 and 372 °C for a light catalytic cracked distillate (60.8% - 79.8% aromatic hydrocarbons). These values are consistent with the distillation range of 150 to 450 °C described by CONCAWE (1996) for the general category of middle distillate oils having hydrocarbon components predominantly in the range of C_9 to C_{30}. No substantial differences in boiling range were apparent for gas oils with high concentrations of either aromatic or saturated hydrocarbons.

Summary: No additional testing is proposed. The distillation ranges of a variety of gas oils and distillate fuels have been adequately measured.

Vapor Pressure
For mixtures such as petroleum products, the vapor pressure of the mixture is the sum of the partial pressures of the individual components (Dalton's Law of Partial Pressures). Gas oils are expected to have low vapor pressure due to their boiling range (150 to 450 °C) and molecular weights of the constituent hydrocarbons (C_9 – C_{30} carbon atoms). Measured values according to ASTM Method D2889 for automotive gas oil (diesel fuel) and heating oil were approximately 0.4 kPa at 40 °C (CONCAWE, 1996), while measurements made on No. 2 fuel oil and diesel oil according to the Reid Method (ASTM, D323) were reported as 2 kPa at 38 °C (Jokuty et al., 2002). Because the physical-chemical characteristics of distillate fuels reflect the gas oil streams from which they were produced, these vapor pressure measurements are expected to approximate the vapor pressures of individual gas oils. Vapour pressure estimates of constituent hydrocarbons in gas oil streams made using EPIWIN (EPA, 2000) approximated the measured data. Vapour pressure estimates of low molecular weight hydrocarbons of varying isomeric structures fell within a range of 0.01 to 1.6 kPa, with higher molecular weight hydrocarbons showing very low vapour pressures (e.g., 10^{-8} to 10^{-10} kPa).

Summary: No additional testing is proposed. The vapor pressures of representative distillate fuels have been adequately measured. These measurements are expected to approximate the vapor pressures of individual gas oils.

Partition Coefficient
The percent distribution of the hydrocarbon groups (i.e., paraffins, olefins, naphthenes, and aromatics) and the carbon chain lengths of hydrocarbon constituents in gas oils largely determines the partitioning characteristics of the mixture. Generally, hydrocarbon chains with fewer carbon atoms tend to have lower partition coefficients than those with higher carbon numbers (CONCAWE, 2001). Because gas oils are complex mixtures, it is not possible to determine their log K_{ow} values. Rather, partition coefficients have been calculated for individual component hydrocarbons from known hydrocarbon composition (CONCAWE, 1996). Those calculated K_{ow} values ranged from 3.9 to >6.0 for a hydrodesulfurized middle distillate ((65.6% - 79.4% saturated hydrocarbons), straight-run middle distillate (78.8% saturated hydrocarbons), and a light cat-cracked distillate (60.8% - 79.8% aromatic hydrocarbons). Those estimates are in agreement with a range of log K_{ow} values of 3.7 to >6 determined by the Testing Group using EPIWIN (EPA, 2000) for various C_9 to C_{30} hydrocarbon components in gas oils. There are no apparent differences in the range of K_{ow} values determined for gas oils with high concentrations of either aromatic or saturated hydrocarbons.

Summary: No additional modeling is proposed. Partition coefficients (K_{ow}) of 3.9 to >6.0 have been estimated for representative C_9 to C_{30} hydrocarbon components of gas oils. A similar range of partition coefficients would be expected for component hydrocarbons in distillate fuels.

Water Solubility
When released to water, gas oils will float and spread at a rate that is viscosity-dependent. Component hydrocarbons in gas oils will partition to water according to their individual solubility values. For individual hydrocarbon constituents in gas oils, water solubility values vary by orders of magnitude. Molecular weight and chemical structure have a great influence on the ultimate degree of solubility. Water solubility of component hydrocarbon molecules was estimated using EPIWIN©, WSKOW V1.40 computer model (EPA, 2000). Water solubility ranged from essentially insoluble (approximately 10^{-8} mg/L) for the higher molecular weight fractions (e.g., C_{30}) within gas oil to approximately 52 mg/L for a C_9 alkylbenzene.

Summary: No additional modeling is proposed. Water solubility values have been calculated for various C_9 to C_{30} PONA constituents in gas oils. A similar range of water solubility values would be expected for component hydrocarbons in distillate fuels.

Environmental Fate Data
The typical battery of tests used to measure the environmental fate of a material is not easily performed on the materials of this category because of their physical and chemical properties. Therefore, when measured data are not available to describe a fate process, components of the gas oils will be modeled where necessary using EPIWIN® (U.S. EPA, 2000).

Photodegradation
The direct aqueous photolysis of an organic molecule occurs when it absorbs sufficient light energy to result in a structural transformation. Only light energy at wavelengths between 290 and 750 nm can result in photochemical transformations in the environment, although absorption is not always sufficient for a chemical to undergo photochemical degradation. Saturated and one-ring aromatic hydrocarbons do not show absorbance in the 290 to 800 nm range and would not be expected to be directly photodegraded. Polyaromatic hydrocarbons, on the other hand, have shown absorbance of the 290 to 800 nm range of light energy and could potentially undergo photolysis reactions. The degree and rate at which these compounds photodegrade depends upon whether conditions allow penetration of light with sufficient energy to effect a change.

Components in gas oils that do not directly photodegrade (e.g., paraffins, naphthenes, and one-ring aromatic compounds) may be subject to indirect photodegradation. Indirect photodegradation is the reaction with photosensitized oxygen in the atmosphere in the form of hydroxyl radicals (OH). The potential to undergo indirect photodegradation can be estimated using the atmospheric oxidation potential (AOP) model subroutine (AOPWIN V1.90) in EPIWIN© (EPA, 2000), which calculates a chemical half-life and an overall OH reaction rate constant based on a 12-hour day and a given OH concentration. Atmospheric oxidation rates and half-lives were calculated for the low and high end of the range of molecular weight constituents of gas oils (e.g., C_9 and C_{30} hydrocarbon structures). AOP half-life estimates for these compounds ranged from 0.1 (for various C9 to C30 olefinic structures and C30 2+ring aromatic compounds) to 1.5 days (for a C9 one-ring aromatic structure). Based on the half-life values calculated by AOPWIN, no substantial differences in indirect photodegradation potential is expected between gas oils with high concentrations of either aromatic or saturated hydrocarbons.

Summary: No additional modeling is proposed. Atmospheric half-lives of 0.1 to 1.5 days have been calculated for representative C_9 and C_{30} hydrocarbon components of gas oils.

Stability in Water
Chemicals that have a potential to hydrolyze include alkyl halides, amides, carbamates, carboxylic acid esters and lactones, epoxides, phosphate esters, and sulfonic acid esters (Harris, 1982). Because gas oils do not contain significant levels of these functional groups, materials in the gas oils category are not subject to hydrolysis.

Summary: No additional modeling is proposed. The materials in the gas oils category do not contain chemical moieties that undergo hydrolysis.

Transport and Distribution in the Environment (Fugacity)
Fugacity-based multimedia modeling can provide basic information on the relative distribution of chemicals between selected environmental compartments (i.e., air, soil, sediment, suspended solids, water and biota). The U.S. EPA has agreed that computer modeling techniques are an appropriate approach to estimating chemical partitioning. A widely used fugacity model is the EQC (Equilibrium Criterion) model. The EQC model is a Level 1 (i.e., steady state, equilibrium, closed system and no degradation) model that utilizes the input of basic chemical properties including molecular weight, vapor pressure, and water solubility to calculate distribution within a standardized unit environment. EPA cites the use of the EQC model in its document, "Determining the Adequacy of Existing Data", which was prepared as guidance for the HPV chemicals program. The EQC model was used by the Testing Group to estimate the percent distribution in environmental media (i.e., air, water, soil, sediment, and fish) of various C_9 to C_{30} compounds representing the different classes of hydrocarbons found in gas oils (e.g., paraffins, olefins, naphthenes, and aromatics). Hydrocarbons having nine carbon atoms showed a tendency to partition to air (up to 98%). As molecular weight increases, partitioning shifts to soil, which accounts for 98% of the distribution of the C_{30} components. This trend was similar for saturate and aromatic structures alike. Therefore, gas oils with high concentrations of either aromatic or saturated hydrocarbons are expected to partition in the environment in a similar manner.

Summary: No further modeling is proposed. Fugacity modeling has been done to provide an estimate of the percent distribution in environmental media of various C_9 to C_{30} PONA hydrocarbons found in gas oils.

Biodegradation
Little data are available on the behavior of specific gas oils in standard tests for biodegradability. Much of what is known is based on information gained from testing hydrocarbon mixtures of other petroleum products. Under standard biodegradability tests, hydrocarbon compounds representative of those found in gas oils typically do not pass ready biodegradability test conditions. Although those compounds are not recognized as being readily biodegradable, most hydrocarbon species present in gas oils are known to be ultimately degraded by aerobic microorganisms (Connell and Miller, 1980; CONCAWE, 1996). Lower molecular weight compounds may be expected to be degraded relatively quickly in aerobic conditions, while higher molecular weight compounds, particularly polycyclic aromatics, will degrade slower. Much of this evidence is based on bioremediation studies of contaminated soils, which have shown that hydrocarbon components in gas oils are degraded in the presence of oxygen (Hoeppel et al., 1991; Miethe et al., 1994). Bioremediation of a diesel fuel spill has also been demonstrated under Arctic conditions (Liddell et al., 1994).

Evidence of ultimate biodegradability is provided in a study performed on a high aliphatic content gas oil (Exxon, 1994). In that test, gas oil was incubated under aerobic conditions in the presence of an activated sludge inoculum. After 14 days, approximately 42% was degraded, with little or no biodegradation occurring thereafter. Battersby et al. (1992) observed approximately 40% biodegradation for a gas oil in a 28-day modified Sturm procedure. In two biodegradation studies of diesel fuel using the OECD 301F method, Mobil (1999) measured 57.5% biodegradation and Clark et al. (2003) measured 60% biodegradation. Although the level of degradation measured by Clark et al. (2003) achieved the ready biodegradation pass level for mixtures of similar substances (OECD, 2003), most studies have not shown this level of biodegradation.

Under anaerobic conditions, such as anoxic sediments, rates of biodegradation of gas oils components are negligible and the gas oils may persist under those conditions for some time (CONCAWE, 1996; Brown 1989). Degradation then will be dependent on bioturbation or resuspension to provide microbes with access to oxygen.

Summary: Biodegradability assays will be performed on samples of two gas oil streams.
One sample will be from a stream containing a predominance of saturated hydrocarbons while the second sample will be from a stream containing a predominance of aromatic hydrocarbons. The limited test data available on the biodegradability of gas oils underscores the need for these assays, and the results are expected to provide a range of biodegradation rates expected for substances in this category. The Testing Group does not think testing a gas oil containing olefinic hydrocarbons would be worthwhile due to the relatively low levels of olefins in most of the gas oil samples included in this test plan.

Evaluation of Existing Ecotoxicology Data and Proposed Testing

Multiple ecotoxicological studies on heating and transportation fuels (e.g., no. 2 fuel oil and diesel fuel) have been conducted. In general, these commercial distillate fuels show moderate toxicity to aquatic life. LL50 values for fish ranged from 3.2 to 65 mg/L (Exxon, 1998a-c; 1999; Shell, 1995a,b), while EL50 values for invertebrates ranged from 2.0 to 210 mg/L (Exxon, 2001; Fraunhofer, 2000; Shell, 1994, 1995c,d). All studies used exposures to water accommodated fractions of the gas oils. No differences in the sensitivity of fish and invertebrates to no. 2 fuel oil or diesel fuel were noted. In contrast, algal EL50 values were consistently lower for no. 2 fuel oil, suggesting a greater sensitivity of algae to no. 2 fuel oil than to diesel fuel. EL50 values for inhibition of algal growth rate and biomass ranged from 1.8 to 2.9 mg/L for no. 2 fuel oil and from 10 to 78 mg/L for diesel fuel (Exxon, 1998d,e; Shell, 1995 e,f).

Based on compositional data for gas oil refining streams, these substances span a wide compositional matrix including streams with predominantly saturated hydrocarbons and those with predominantly aromatic hydrocarbons. Although the Testing Group considers the aquatic toxicity data for distillate fuels to be adequate for assessing the aquatic hazard of those materials, there are water solubility and partitioning differences between saturated and aromatic hydrocarbons that could affect the aquatic toxicology of gas oil streams high in saturate or aromatic character. Hence, the Testing Group believes a data gap exists for gas oil streams containing either high levels of saturated or aromatic hydrocarbons and proposes to test two gas oils representing the ends of this spectrum. While olefins comprise a separate hydrocarbon group, their percentage of the total hydrocarbon component in gas oils is generally relatively low. This, and the consideration that olefinic hydrocarbons show water solubility and Log P values similar to saturated hydrocarbons of equal carbon numbers, argue that aquatic toxicity will be driven by either the saturated or aromatic fractions. Although gas oil samples targeted for aquatic toxicity testing may contain an olefinic component, it is not expected to play a significant role in defining their aquatic hazard.

Summary: Aquatic toxicity tests will be performed on samples of two gas oil streams. One sample will be from a stream containing a predominance of saturated hydrocarbons while the second sample will be from a stream containing a predominance of aromatic hydrocarbons.

Matrix of Available Data and Proposed Testing

Table 2. Matrix of Available Data and Proposed Testing

	GAS OIL STREAMS		DISTILLATE FUELS
TEST	PREDOMINANTLY SATURATED HYDROCARBONS	PREDOMINANTLY AROMATIC HYDROCARBONS	
Physical/Chemical Properties			
Melting Point	Adequate	Adequate	Adequate
Boiling Point	Adequate	Adequate	Adequate
Vapor Pressure	Adequate	Adequate	Adequate
Water Solubility	Adequate	Adequate	Adequate
Partition coefficient (log Kow)	Adequate	Adequate	Adequate
Ecotoxicity			
Algae Growth Inhibition	Test	Test	Adequate
Acute Freshwater Invertebrate	Test	Test	Adequate
Acute Freshwater Fish	Test	Test	Adequate
Environmental Fate			
Biodegradation	Test	Test	Adequate
Stability in Water	N/A	N/A	N/A
Photodegradation (estimate)	Adequate	Adequate	Adequate
Transport and Distribution	Adequate	Adequate	Adequate
Mammalian Toxicity			
Acute	Adequate	Adequate	Adequate
Repeat-dose	Adequate	Adequate	Test
Reprod/Develop	Test[1]	Test[1]	Test[1]
Genotoxicity, *in vitro*	Adequate	Adequate	Adequate
Genotoxicity, *in-vivo*	Adequate	Adequate	Adequate

[1] Data is adequate for Developmental endpoint

References

API (American Petroleum Institute). 1978. Mutagenicity evaluation of diesel fuel. API Med. Res. Publ. 26-60102, Washington D.C.

API (American Petroleum Institute). 1979a. In-vitro and in-vivo mutagenicity studies No. 2 home heating oil sample API 78-4. API Med. Res. Publ. 27-30140, Washington D.C.

API (American Petroleum Institute). 1979b. Teratology study in rats, diesel fuel. API Med. Res. Publ. 27-32174, Washington D.C.

API (American Petroleum Institute). 1980a. Acute toxicity tests on API 78-2 No. 2 home heating oil (30% cat) primary dermal irritation, primary eye irritation, skin sensitization, acute dermal toxicity, acute oral toxicity, subacute dermal toxicity. API Report No. 27-32771, Washington D.C.

API (American Petroleum Institute). 1980b. Acute toxicity tests on API 78-3 No. 2 home heating oil (10% cat) primary dermal irritation, primary eye irritation, skin sensitization, acute dermal toxicity, acute oral toxicity, subacute dermal toxicity. API Report No. 27-32773, Washington D.C.

API (American Petroleum Institute). 1980c. Acute toxicity tests on API 78-4 No. 2 home heating oil (50% cat) primary dermal irritation, primary eye irritation, skin sensitization, acute dermal toxicity, acute oral toxicity, subacute dermal toxicity. API Report No. 27-32068, Washington D.C.

API (American Petroleum Institute). 1980d. Acute toxicity tests on API 79-6, diesel fuel (market place sample). API Med. Res. Publ. 27-32817, Washington D.C.

API (American Petroleum Institute). 1980e. Mutagenicity evaluation of diesel fuel in the mouse dominant lethal assay. API Med. Res. Publ. 28-31346, Washington D.C.

API (American Petroleum Institute). 1982a. Acute oral toxicity study in rats, acute dermal study in rabbits, primary dermal irritation study in rabbits, primary eye irritation study in rabbits, dermal sensitization study in guinea pigs API 83-07, light catalytically cracked distillate CAS 64741-59-9. API Med. Res. Publ. 33-30162, Washington D.C.

API (American Petroleum Institute). 1982b. Acute oral toxicity study in rats, acute dermal toxicity study in rabbits, Primary dermal irritation study in rabbits, primary eye irritation study in rabbits API 81-09, hydrodesulfurized middle distillate. API Med. Res. Publ. 30-32347, Washington D.C.

API (American Petroleum Institute). 1982c. Acute oral toxicity study in rats, acute dermal toxicity study in rabbits, primary dermal irritation study in rabbits, primary eye irritation study in rabbits, API 81-10, hydrodesulfurized middle distillate. API Med. Res. Publ. 30-32348, Washington D.C.

API (American Petroleum Institute). 1983a. LC50 acute inhalation toxicity evaluation of a petroleum derived hydrocarbon in rats, API 81-09, hydrodesulphurized middle distillate. API Med. Res. Publ. 30-32856, Washington D.C.

API (American Petroleum Institute). 1983b. LC50 acute inhalation toxicity evaluation of a petroleum derived hydrocarbon in rats, API 81-10, hydrodesulfurized middle distillate. API Med. Res. Publ. 30-32857, Washington D.C.

API (American Petroleum Institute). 1984a. Mutagenicity evaluation in the rat bone marrow cytogenetic assay and the mouse lymphoma forward mutation assay API 81-10, hydrodesulfurized middle distillate. API Med. Res. Publ. 32-30535, Washington D.C.

API (American Petroleum Institute). 1984b. Dermal sensitization study in guinea pigs, closed patch technique, API 81-10, hydrodesulfurized middle distillate. API Report No. 31-31414, Washington D.C.

API (American Petroleum Institute). 1984c. Dermal sensitization study in guinea pigs, closed patch technique, API 81-09, hydrodesulfurized middle distillate. API Report No. 31-31352, Washington D.C.

API (American Petroleum Institute). 1985a. 28-Day dermal toxicity study in the rabbit, API 83-07 Light catalytically cracked distillate (CAS 64741-59-9). API Med. Res Publ. 32-32751, Washington D.C.

API (American Petroleum Institute). 1985b. Activity of API 83-08 in the acute in-vivo cytogenetic assay in male and female rats, TEM CAS No. 51-18-3. API Med. Res. Publ. 33-30493, Washington D.C.

API (American Petroleum Institute). 1985c. Acute in-vivo cytogenetics assay in male and female rats of API 83-11. API Med. Res. Publ. 32-32408, Washington D.C.

API (American Petroleum Institute). 1985d. Acute oral toxicity study in rats, acute dermal toxicity study in rabbits, primary dermal irritation study inrabbits, primary eye irritation study in rabbits, dermal sensitization study in guinea pigs, API 83-08 Light catalytically cracked distillate (CAS 64741-59-9). API Med. Res. Publ. 32-32859, Washington D.C.

API (American Petroleum Institute). 1985e. Acute oral toxicity study in rats, Acute dermal toxicity study in rabbits, primary dermal irritation study in rabbits, primary eye irritation study in rabbits, dermal sensitization study in guinea pigs, API 83-11, straight run middle distillate. API Med. Res. Publ. 32-32857, Washington D.C.

API (American Petroleum Institute). 1985f. L5158Y TK+/- Mouse lymphoma mutagenesis assay of API 83-08. API Med. Res. Publ. 32-31709, Washington D.C.

API (American Petroleum Institute). 1985g. L5178Y TK+/- Mouse lymphoma mutagenesis assay of API 83-11. API Med. Res. Publ. 32-31768, Washington DC.

API (American Petroleum Institute). 1985h. Mutagenicity evaluation in the rat bone marrow cytogenetic assay and the mouse lymphoma forward mutation assay API 81-09, hyrodesulfurized middle distillate. API Med. Res. Publ. 32-30965, Washington D.C.

API (American Petroleum Institute). 1985i. Mutagenicity evaluation of API 83-07 in the mouse lymphoma forward mutation assay. API Med. Res. Publ. 32-32167, Washington D.C.

API (American Petroleum Institute). 1985j. Mutagenicity evaluation of API 83-11 in the mouse lymphoma forward mutation assay. API Med. Res. Publ. 32-32166, Washington D.C.

API (American Petroleum Institute). 1986a. Acute inhalation toxicity evaluation in rats, API 83-07, light catalytic cracked distillate CAS No. 64741-59-9. API Med. Res. Publ. 33-30549, Washington D.C.

API (American Petroleum Institute). 1986b. Acute inhalation toxicity evaluation in rats, API 83-08, light catalytic cracked distillate CAS No. 64741-59-9. API Med. Res. Publ. 33-30444, Washington D.C.

API (American Petroleum Institute). 1986c. Mutagenicity evaluation in the rat bone marrow cytogenetic assay API 83-11, Straight run middle distillate (CAS 64741-44-2). API Med. Res. Publ. 33-30930, Washington D.C.

API (American Petroleum Institute). 1986d. Mutagenicity in a mouse lymphoma mutation assay API 81-10, hydrodesulfurized middle distillate CAS No. 64742-80-9. API Med. Res. Publ. 33-31224, Washington D.C.

API (American Petroleum Institute). 1986e. Mutagenic evaluation in the rat bone marrow cytogenetic assay, API 83-07 Light catalytically cracked distillate (CAS 64741-59-9). API Med. Res. Publ. 33-30929, Washington D.C.

API (American Petroleum Institute). 1986f. Four-week subchronic inhalation toxicity study in rats: Final report API 81-07, hydrodesulfurized kerosine (petroleum) (CAS 64742-81-0). API 81-09, hydro-desulfurized middle

distillate (petroleum) (CAS 64742-80-9). API 81-10, hydro-desulfurized middle distillate (petroleum) (CAS 64742-80-9). API Med Res. Publ. 33-32724, Washington D.C.

API (American Petroleum Institute). 1987a. Acute inhalation toxicity evaluation of a petroleum derived hydrocarbon in rats, API 83-11 Straight run middle distillate (CAS 64741-44-02). API Med. Res. Publ. 34-30635, Washington D.C.

API (American Petroleum Institute). 1987b. Mutagenicity of API 81-10 ARO. aromatic fraction of hydrodesulfurized middle distillate (CAS 64742-80-9) (coded as API 86-10 ARO) in a mouse lymphoma mutation assay. API Med. Res. Publ. 34-32644, Washington D.C.

API (American Petroleum Institute). 1987c. Mutagenicity of API 81-10 SAT. saturated fraction of hydrodesulfurized middle distillate (CAS 64742-80-9) (coded as API 86-10 SAT) in a mouse lymphoma mutation assay. API Med. Res. Publ. 34-32645, Washington D.C.

API (American Petroleum Institute). 1987d. Comprehensive analytical analysis of API generic petroleum streams. Washington, D.C.

API (American Petroleum Institute). 1987e. Mutagenicity of API 81-10, hydrodesulfurized middle distillate CAS No. 64742-80-9. API Med. Res. Publ. 34-32643, Washington D.C.

API (American Petroleum Institute). 1988a. In-vivo sister chromatid exchange assay, API 81-10 hydrodesulfurized middle distillate. API Med. Res. Publ. 35-32479, Washington D.C.

API (American Petroleum Institute). 1988b. Sister chromatid exchange assay in chinese hamster ovary (CHO) cells with API 83-07: Light catalytic cracked distillate. API Med. Res. Publ. 35-32432, Washington D.C.

API (American Petroleum Institute). 1988c. Sister chromatid exchange assay in Chinese hamster Ovary (CHO) cells with API 81-10 hydrodesulfurized middle distillate: Final Report. API Med. Res. Publ. 35-32433, Washington D.C.

API (American Petroleum Institute). 1989. In vivo sister chromatid exchange assay with API 83-07 (light catalytic cracked distillate). API Med. Res. Publ. 36-31429, Washington D.C.

ASTM (American Society for Testing and Materials). 1999. Standard Test Method for Pour Point of Petroleum Oils. ASTM D97, Volume 05.01. West Conshohocken, PA.

ASTM (American Society for Testing and Materials). 2001. Standard Specification for Fuel Oils. ASTM D396-01. West Conshohocken, PA.

ASTM (American Society for Testing and Materials). 2002. Standard Specification for Diesel Fuel Oils. ASTM D975-02. West Conshohocken, PA.

ATSDR (Agency for Toxic Substances and Disease Registry). 1995. Toxicological Profile for Fuel Oils

Battersby, N.S., et al. 1992. A correlation between the biodegradability of oil products in the CEC L-33-T-82 and modified Sturm tests. Chemosphere. 24:1989-2000. (As cited in CONCAWE, 1996).

Brown, M. 1989. Biodegradation of oil in freshwater In: The Fate and Effects of Oil in Freshwater. Green and Trett, eds. Elsevier, London.

Clark, R.H., Battersby, N. S., Louis, J.J.J., Palmer, A.P., Stradling, R.J and Whale, G.F. 2003. The Environmental Benefits of Shell GTL Diesel: Proceedings of the 4th Int. Colloquium, "Fuels". Tech. Akad. Esslingen, Ostfilern, Germany, January 15-16.

ChevronTexaco. 2003. A schematic layout of a modern, fully integrated refinery, http://www.chevron.com/prodserv/fuels/bulletin/diesel/L2_4_2_fs.htm.

CONCAWE. 1991. Middle distillates - a review of the results of a CONCAWE programme of short-term biological studies. CONCAWE, Brussels.

CONCAWE. 1996. Gas oils (diesel fuels/heating oils). Product Dossier No. 95/107. CONCAWE, Brussels.

CONCAWE 2001. Environmental classification of petroleum substances - Summary data and rationale. Report No. 01/54. CONCAWE, Brussels.

Connell, D.W., and G.J. Miller. 1980. Petroleum Hydrocarbons in Aquatic Ecosystems – Behavior and Effects of Sublethal Concentrations: Part I in: Critical Reviews in Environmental Control. pp. 37 – 104. C.P. Straub, ed. CRC Press, Boca Raton, Florida.

DGMK (Deutsche Wissenschaftliche Gesellschaft fur Erdol, Erdgas und Kohle -German Research Organization for Oil, Gas and Coal). 1991. Middle distillates: Analytical investigations and mutagenicity studies. Research Report 412-1. DGMK, Hamburg, Germany.

DGMK (Deutsche Wissenschaftliche Gesellschaft fur Erdol, Erdgas und Kohle (German Research Organization for Oil, Gas and Coal). 1993. Middle distillates: Dermal Initiation // Promotion study. Research Report 412-2 DGMK. Hamburg, Germany.

EPA (U.S. Environmental Protection Agency) 2000. Estimation Programs Interface (EPI) Suite, Version 3.10. U.S. Environmental Protection Agency, Washington, DC.

Exxon (Exxon Biomedical Sciences, Inc.). 1994. Internal test summary for Water Insoluble Biodegradation Test Method Development Using Concawe Reference Gas Oil:Phase III.

Exxon (Exxon Biomedical Sciences Inc.). 1996a. Two year dermal carcinogenicity study of middle distillates in mice: Final report. Project No. 117811A.

Exxon (Exxon Biomedical Sciences, Inc.). 1996b. Primary dermal irritation study in the rabbit, test materials MD-6 and MD-7: Final report. Project No. 117904A. Study performed for CONCAWE.

Exxon (Exxon Biomedical Sciences Inc.). 1998a. Acute toxicity of water accomodated fractions to Skeletonema costatum. Study #142967SK.

Exxon (Exxon Biomedical Sciences, Inc.). 1998b. Acute Fish Toxicity Test with Menidia beryllina. Study #142940MB.

Exxon (Exxon Biomedical Sciences, Inc.). 1998c. Rainbow Trout Acute Fish Toxicity Test. Study #142958.

Exxon (Exxon Biomedical Sciences, Inc.). 1998d. Sheepshead Minnow Acute Fish Toxicity Test. Study #142961.

Exxon (Exxon Biomedical Sciences Inc.). 1998e. Acute toxicity of water accommodated fractions to Selenastrum capricornutem. Study #142967

Exxon (Exxon Biomedical Sciences, Inc.). 1999. Fathead Minnow Acute Fish Toxicity Test. Study #142940FHM.

Exxon (Exxon Biomedical Sciences, Inc.). 2001. Static Daphnid Acute Toxicity Test . Study #146342A.

Feuston, M. H., Low, L. K., Hamilton, C. E and Mackerer, C.R. 1994. Correlation of systemic and developmental toxicities with chemical component classes of refinery streams. Fund. Appl. Toxicol. Vol 22, pp 622-630.

Fraunhofer-Institut, Umweltchemie und Okotoxikologie. 2000. Daphnia magna, Acute Immobiliation Test with Gas oil WAFs. GLP-Code: DGM-001/4-20.

Harris, J.C. 1982. Rate of Hydrolysis: In Handbook of Chemical Property Estimation Methods. Lyman, Reehl and Rosenblatt, eds. McGraw-Hill Book Co., New York.

Hoeppel, R.E. et al. 1991. Bioventing soils contaminated with petroleum hydrocarbons. J. Indust. Microbiol. 8:141-146.

IARC (International Agency for Research on Cancer). 1988. IARC Monographs on the evaluation of the carcinogenic risk of chemicals to humans, Volume 45: Occupational Exposures in Petroleum Refining; Crude Oil and Major Petroleum Fuels. Lyon, France.

IITRI (IIT Research Institute). 1984. Three week percutaneous toxicity study of diesel fuel in rabbits: Final Report. IITRI project No. L8100. Study sponsored by Standard Oil Co. (Ind). IIT Research Institute, Chicago.

IITRI (IIT Research Institute). 1985. Lifetime dermal tumorigenesis study of premier diesel fuel in male mice. Study No. 134 IITRI Project No. L8100. IIT Research Institute, Chicago.

Jokuty, P., Whiticar S., Wang Z., Fingas M., Fieldhouse B., Lambert P., and Mullin J.. 2002. Properties of Crude Oils and Oil Products. Environmental Protection Service, Environment Canada, Ottawa, Ontario. Internet Version 2002 via http://www.etcentre.org/spills.

Liddell, B.V., et al. 1994. Arctic bioremediation – a case study. SPE Prod. Facil. 9:132-136.

Miethe, D., et al. 1994. The relationship between the microbial activitiy of the autochthonous microorganisms of pristine and contaminated soils and their potential for the degradation of mineral oil hydrocarbons. Act. Biotechnmo. 14:131-140.

Mobil. 1985. Thirteen week dermal administration of light cycle oil to rats. Study No. 20535. Mobil Environmental and Health Science Laboratory, Princeton, New Jersey.

Mobil. 1988. Light cycle oil developmental toxicity screen in rats. Study No. 50511. Mobil Environmental and Health Science Laboratory, Princeton, New Jersey.

Mobil. 1991. Thirteen week dermal administration of Beaumont coker light gas oil to rats: Final report. Study No. 61996. Mobil Environmental and Health Sciences laboratory, Princeton, New Jersey.

Mobil, 1999. Determination of the aerobic ready biodegradability of Nigerian diesel fuel using the OECD 301F manometric respirometry test method. Mobil Business Resources Corp., Ecotoxicology Laboratory, Paulsboro, NJ.

OECD (Organisation for Economic Cooperation and Development). 2003. OECD guidelines for testing of chemicals, Section 3, Part 1: Principles and strategies related to the testing of degradation of organic chemicals. OECD, Paris, France.

Shell (Shell Research Limited.). 1994. Acute toxicity of water accomodated fractions (WAFs) to Daphnia magna. Study #6167.

Shell (Shell Research Limited.). 1995a. Acute toxicity of water accomodated fractions to Oncorhynchus mykiss. Study #6304.

Shell (Shell Research Limited.). 1995b. Acute toxicity of water accomodated fractions to Oncorhynchus mykiss. Study #6303.

Shell (Shell Research Limited.). 1995c. Acute toxicity of water accomodated fractions to Daphnia magna. Study #6304.

Shell (Shell Research Limited.). 1995d. Acute toxicity of water accomodated fractions to Daphnia magna. Study #6303.

Shell (Shell Research Limited.). 1995e. Acute toxicity of water accommodated fractions to Raphidocelis subcapitata. Study #6304.

Shell (Shell Research Limited.). 1995f. Acute toxicity of water accomodated fractions to Raphidocelis subcapitata. Study #6303.

Speight, J.G. 1998. Petroleum Chemistry and Refining. Applied Energy Technology Series. Taylor and Francis, Washington, D.C.

UBTL. 1986. Twenty-eight day dermal toxicity study in rat on Watson Cherry Point diesel fuel number 2. (F-75-01). Study No. 60764. UBTL Inc. Salt Lake City, USA. Study sponsored by the Atlantic Richfield Company.

UBTL. 1992. Twenty-eight (28) day dermal toxicity study in rats administered test article F-188. Study N0. 66197. UBTL Inc. Salt Lake City, USA. Study sponsored by the Atlantic Richfield Company.

UBTL. 1994a. A developmental toxicity screen in female rats administered F-215 dermally during gestation days 0 to 20: Final report. UBTL study 66476. UBTL Inc. Salt Lake City, USA. Study sponsored by the Atlantic Richfield Company.

UBTL. 1994b. A developmental toxicity screen in female Sprague-Dawley rats administered F-220 dermally during gestation days 0 to 20:Final Report. UBTL study 66358. UBTL Inc. Salt Lake City, USA. Study sponsored by the Atlantic Richfield Company.

APPENDIX A.

CAS Numbers and Definitions of Category Members

The CAS numbers and definitions of refinery streams, including gas oils and distillate fuels, were developed in response to Section 8(b) of the Toxic Substances Control Act. This section of TSCA required identification and registration with the Environmental Protection Agency before July 1979 of each "chemical substance" being manufactured, processed, imported or distributed in commerce. Due to analytical limitations and known variability in refinery stream composition, identification of every specific individual molecular compound in every refinery process stream under all processing conditions was impossible. Recognizing these problems, the American Petroleum Institute (API) recommended to the EPA a list of generic names for refinery streams consistent with industry operations and covering all known processes used by refiners. The list, including generic names, CAS numbers and definition of each stream, was published by the EPA as "Addendum I, Generic Terms Covering Petroleum Refinery Process Streams."

Because of the variability inherent in the processing of petroleum materials, the definitions API developed for the CAS numbers are qualitative in nature, written in broad, general terms. The definitions often contain only ranges of values for carbon numbers, with little if any quantitative analytical information or concern for possible compositional overlaps. As a result, the CAS descriptions are not useful in determining the exact composition of any specific refinery stream.

For example, included in Figure 3 are saturated hydrocarbons content values for samples of six gas oil streams with the CAS number 64741-49-7. The saturated hydrocarbon content of the six samples ranged from 49.1 to 67%. Thus, for the purposes of this test plan, one of the samples would be considered "predominantly aromatic" while the other five would be "predominantly saturated". It is because of this variability that the Testing Group has not grouped the CAS numbers of the gas oil streams listed in this appendix into "predominantly saturated" and "predominantly aromatic".

Distillate Fuels

068334-30-5

Diesel Oil ..C9-20 325F-675F
Petroleum products, diesel oil

A complex combination of hydrocarbons produced by the distillation of crude oil. It consists of hydrocarbons having carbon numbers predominantly in the range of C9 through C20 and boiling in the range of approximately 163 degrees C to 357 degrees C (325 degrees F to 675 degrees F).

068476-30-2

Fuel Oil No. 2 ..32.6 To 37.9 SSU

A distillate oil having a minimum viscosity of 32.6 SUS at 37.7 degrees C (100 degrees F) to a maximum of 37.9 SUS at 37.7 degrees C (100 degrees F).

068476-31-3

Fuel Oil No. 4 ..45 To 125 SSU

A distillate oil having a minimum viscosity of 45 SUS at 37.7 degrees C (100 degrees F) to a maximum of 125 SUS at 37.7 degrees C (100 degrees F).

068476-34-6

Diesel Fuel No. 2 ..32.6 To 40.1 SSU
Fuels diesel, no. 2

The distillate oil having a minimum viscosity of 32.6 SUS at 37.7 degrees C (100 degrees F) to a maximum of 40.1 SUS at 37.7 degrees C (100 degrees F).

Refinery Streams

064741-91-9

Solvent Refined Distillate, Middle..C9-20 302F-653F
Distillates (petroleum), solvent-refined middle

A complex combination of hydrocarbons obtained as the raffinate from a solvent extraction process. It consists predominantly of aliphatic hydrocarbons having carbon numbers predominantly in the range of C9 through C20 and boiling in the range of approximately 150 degrees C to 345 degrees C (302 degrees F to 653 degrees F).

064741-90-8

Solvent Refined Gas Oils..C11-25 401F-752F
Gas oils (petroleum), solvent refined

A complex combination of hydrocarbons obtained as the raffinate from a solvent extraction process. It consists predominantly of aliphatic hydrocarbons having carbon numbers predominantly in the range of C11 through C25 and boiling in the range of approximately 205 degrees C to 400 degrees C (401 degrees F to 752 degrees F).

064741-44-2

Gas Oil, Light ..C11-20 401F-653F
Distillates (petroleum), straight- run middle

A complex combination of hydrocarbons produced by the distillation of crude oil. It consists of hydrocarbons having carbon numbers predominantly in the range of C11 through C20 and boiling in the range of 205 degrees C to 345 degrees C (401 degrees F to 653 degrees F).

064742-30-9

Neutralized Distillate, Middle ..C11-20 401F-653F
Distillates (petroleum) chemically neutralized middle

A complex combination of hydrocarbons produced by a treating process to remove acidic materials. It consists of hydrocarbons having carbon numbers predominantly in the range of C11 through C20 and boiling in the range of approximately 205 degrees C to 345 degree C (401 degrees F to 653 degrees F).

064741-86-2

Sweetened Distillate ..C9-20 302F-653F
Distillates (petroleum), sweetened middle

A complex combination of hydrocarbons obtained by subjecting a petroleum distillate to a sweetening process to convert mercaptans or to remove acidic impurities. It consists of hydrocarbons having carbon numbers predominantly in the range of C9 through C20 and boiling in the range of approximately 150 degrees C to 345 degrees C (302 degrees F to 653 degrees F).

064742-38-7

Clay Treated Distillate ..C9-20 302F-653F
Distillates (petroleum), clay-treated

A complex combination of hydrocarbons resulting from treatment of a petroleum fraction with natural or modified clay, usually in a percolation process to remove the trace amounts of polar compounds and impurities present. It consists of hydrocarbons having carbon numbers predominantly in the range of C9 through C20 and boiling in the range of approximately 150 degrees C to 345 degrees C (302 degrees F to 653 degrees F).

064741-43-1

Gas Oil, Intermediate ..C11-25 401F-752F
Gas oils (petroleum), straight-run

A complex combination of hydrocarbons produced by the distillation of crude oil. It consists of hydrocarbons having carbon numbers predominantly in the range of C11 through C25 and boiling in the range of approximately 205 degrees C to 400 degrees C (401 degrees F to 752 degrees F).

064741-49-7

Vacuum Tower Condensate ..C11-25 401F-752F
Condensates (petroleum), vacuum tower

A complex combination of hydrocarbons produced as the lowest boiling stream in the vacuum distillation of the residuum from atmospheric distillation of crude oil. It consists of hydrocarbons having carbon numbers predominantly in the range of C11 through C25 and boiling in the range of approximately 205 degrees C to 400 degrees C (401 degrees F to 752 degrees F).

068915-97-9

Gas Oil, Heavy ..540F-660F
Gas oils (petroleum), straight-run, high-boiling

A complex combination of hydrocarbons produced by the atmospheric distillation of crude oil. It boils in the range of approximately 282 degrees C to 349 degrees C (540 degrees F to 660 degrees F).

064742-29-6

Neutralized Gas Oils..C13-25 446F-752F
Gas oils (petroleum), chemically neutralized

A complex combination of hydrocarbons produced by a treating process to remove acidic materials. It consists of hydrocarbons having carbon numbers predominantly in the range of C13 through C25 and boiling in the range of approximately 230 degrees C to 400 degrees C (446 degrees F to 752 degrees F).

068814-87-9

Gas Oil, Intermediate ..C9-25 320F-752F
Distillates (petroleum), full-range straight-run middle

A complex combination of hydrocarbons produced by the distillation of crude oil. It consists of hydrocarbons having carbon numbers predominantly in the range of C9 through C25 and boiling in the range of approximately 150 degrees C to 400 degrees C (302 degrees F to 752 degrees F).

064741-58-8

Vacuum Distillate, Light Paraffin ..C13-30 446F-842F
Gas Oils (petroleum), light vacuum

A complex combination of hydrocarbons produced by the vacuum distillation of the residuum from atmospheric distillation of crude oil. It consists of hydrocarbons having carbon numbers predominantly in the range of C13 through C30 and boiling in the range of approximately 230 degrees C to 450 degrees C (446 degrees F to 842 degrees F).

068915-96-8

Gas Oil Heavy ..550F-880F
Distillates (petroleum), straight-run, b. 557-880 degrees F.

064742-87-6

Hydrodesulfurized Gas Oil, Light Vacuum ..C13-30 446F-842F
Gas oils (petroleum), hydrodesulfurized light vacuum

A complex combination of hydrocarbons obtained from a catalytic hydrodesulfurization process. It consists of hydrocarbons having carbon numbers predominantly in the range of C13 through C30 and boiling in the range of approximately 230 degrees C to 450 degrees C (446 degrees F to 842 degrees F).

064742-79-6

Hydrodesulfurized Gas Oil ..C13-25 446F-752F
Gas oils (petroleum), hydrodesulfurized

A complex combination of hydrocarbons obtained from a petroleum stock by treating with hydrogen to convert organic sulfur to hydrogen sulfide which is removed. It consists predominantly of hydrocarbons having carbon numbers predominantly in the range of C13 through C25 and boiling in the range of approximately 230 degrees C to 400 degrees C (446 degrees F to 752 degrees F).

064742-46-7

Hydrotreated Distillate, Middle ..C11-25 401F-752F
Distillates (petroleum), hydrotreated middle

A complex combination of hydrocarbons obtained by treating a petroleum fraction with hydrogen in the presence of a catalyst. It consists of hydrocarbons having carbon numbers predominantly in the range of C11 through C25 and boiling in the range of approximately 205 degrees C to 400 degrees C (401 degrees F to 752 degrees F).

064742-80-9

Hydrodesulfurized Distillate, Middle ..C11-25 401F-752F
Distillates (petroleum), hydrodesulfurized middle

A complex combination of hydrocarbons obtained from a petroleum stock by treating with hydrogen to convert organic sulfur to hydrogen sulfide which is removed. It consists of hydrocarbons having carbon numbers predominantly in the range of C11 through C25 and boiling in the range of approximately 205 degrees C to 400 degrees C (401 degrees F to 752 degrees F).

064741-77-1

Hydrocracked Distillate, Light ..C10-18 320F-608F
Light Hydrocracked Distillate (Petroleum)

A complex combination of hydrocarbons from distillation of the products from a hydrocracking process. It consists predominantly of saturated hydrocarbons having carbon numbers predominantly in the range of C10 through C18, and boiling in the range of approximately 160 degrees C to 320 degrees C (320 degrees F to 608 degrees F).

068333-25-5

Hydrodesulfurized Distillate, Light Cat Cracked ..C9-25 302F-752F
Distillates (petroleum), hydrodesulfurized light catalytic cracked

A complex combination of hydrorcarbons obtained by treating light catalytic cracked distillates with hydrogen to convert organic sulfur to hydrogen sulfide which is removed. It consists of hydrocarbons having carbon numbers predominantly in the range of C9 through C25 and boiling in the range of approximately 150 degrees C to 400 degrees C (302 degrees F to 752 degrees F). It contains a relatively large proportion of bicyclic aromatic hydrocarbons.

064741-60-2

Cat Cracked Distillate, Intermediate ..C11-30 401F-842F
Distillates (petroleum),intermediate catalytic cracked

A complex combination of hydrocarbons produced by the distillation of products from a catalytic cracking process. It consists of hydrocarbons having carbon numbers predominantly in the range of C11 through C 30 and boiling in the range of approximately 205 degrees C to 450 degrees C (401degrees F to 842 degrees F). It contains a relatively large proportion of tricyclic aromatic hydrocarbons.

064741-59-9

Cat Cracked Distillate, Light ..C9-25 302F-752F
Distillates (petroleum), light catalytic cracked

A complex combination of hydrocarbons produced by the distillation of products from a catalytic cracking process. It consists of hydrocarbons having carbon numbers predominantly in the range of C9 through C25 and boiling in the range of approximately 150 degrees C to 400 degrees C (302 degrees F to 752 degrees F). It contains a relatively large proportion of bicyclic aromatic hydrocarbons.

068333-88-0

Aromatic Hydrocarbons, C9-17

No description

068477-31-6

Reformate Still Bottoms, Light ..To 550F
Distillates (petroleum), catalytic, reformer fractionator residue, low-boiling

The complex combination of hydrocarbons from the distillation of catalytic reformer fractionator residue. It boils approximately below 288 degrees C (550 degrees F).

064741-82-8

Thermocracked Distillate, Light ..C10-18 320F-698F
Distillates (petroleum), light thermal cracked

A complex combination of hydrocarbons from the distillation of the products from a thermal cracking process. It consists predominantly of unsaturated hydrocarbons having carbon numbers predominantly in the range of C10 through C22 and boiling in the range of approximately 160 degrees C to 370 degrees C (320 degrees F to 698 degrees F).

064742-72-9

Distillates, petroleum, catalytic dewaxed, middle

A complex combination of hydrocarbons obtained from a catalytic dewaxing process. It consists of hydrocarbons having carbon numbers predominantly in the range of C9 through C20 and boiling in the range of approximately 150 degrees C to 345 degrees C (302.degrees F to 653.degrees F).

Appendix B.

Links to Additional Resources

Refining Processes: General Descriptions

http://www.chevron.com/about/learning_center/refinery
http://www.lubrizol.com/lubetheory/default.htm
http://www.orionrefining.com/flow.htm
http://www.osha-slc.gov/dts/osta/otm/otm_toc.html
http://www.shellglobalsolutions.com/base_oils/library/library.htm
http://www.shell-lubricants.com/learningcenter/aboutoil.html
http://www.shellus.com/welcome/history/hist_oil_main.html
http://www.epa.gov/compliance/resources/publications/assistance/sectors/notebooks/petrefsnpt1.pdf
http://www.mts.net/~dbrad1/base_oil.htm

Petroleum Related Glossaries

http://www.caltex.com.au/products_glo.asp
http://www.citgo.com/CommunityInvolvement/Classroom/Glossary.jsp
http://www.epplp.com/gloss.html
http://www.prod.exxon.com/exxon_productdata/lube_encyclopedia/
http://www.hellenic-petroleum.gr/english/glossary/gl_main.htm
http://www.prod.exxon.com/exxon_productdata/lube_encyclopedia/
http://www.oilanalysis.com/dictionary
http://www.orionrefining.com/glossary.htm
http://www.gedolbear.com/glossary.htm
http://www.shellglobalsolutions.com/base_oils/glossary/a_g.htm
http://www.ursa-texaco.com/English/glossary_a.html
http://www.eia.doe.gov/pub/oil_gas/petroleum/data_publications/petroleum_marketing_annual/current/pdf/glossary.pdf

Appendix C.

Robust Summary

(Separate document)