U.S. Army Corps of Engineers

New England District
Concord, Massachusetts

Technical Support Services
General Electric (GE) Housatonic River Project
Pittsfield, Massachusetts

Contract No. DACA31-96-D-0006

FINAL DRAFT

ENGINEERING EVALUATION/COST ANALYSIS FOR THE UPPER REACH OF THE HOUSATONIC RIVER

VOLUME II - APPENDICES A THROUGH C

Task Order No. 0013

DCN: GEP4-012400-AACJ

11 February 2000

99P-2783-2

WESTON
MANAGERS DESIGNERS/CONSULTANTS

FINAL DRAFT
ENGINEERING EVALUATION/COST ANALYSIS FOR THE UPPER REACH OF THE HOUSATONIC RIVER

GENERAL ELECTRIC (GE) HOUSATONIC RIVER PROJECT PITTSFIELD, MASSACHUSETTS

VOLUME II: APPENDICES A THROUGH C

Contract No. DACA31-96-D-0006
Task Order No. 0013
DCN: GEP4-012400-AACJ

Prepared for:

U.S. ARMY CORPS OF ENGINEERS
NORTH ATLANTIC DIVISION
NEW ENGLAND DISTRICT
696 Virginia Road
Concord, Massachusetts 01742

Prepared by:

ROY F. WESTON, INC.
1 Wall Street
Manchester, New Hampshire 03101

11 February 2000

W.O. No. 10971.232.007.1060

VOLUME II
TABLE OF CONTENTS

APPENDIX A—COMBINED ACTION AND EE/CA APPROVAL MEMORANDUM
APPENDIX B—EE/CA COST ESTIMATES
APPENDIX C—ARARs TABLES

APPENDIX A

COMBINED ACTION AND EE/CA APPROVAL MEMORANDUM

UNITED STATES ENVIRONMENTAL PROTECTION AGENCY
REGION 1
JOHN F. KENNEDY FEDERAL BUILDING
BOSTON, MASSACHUSETTS 02203-0001

EPA - 490
RFW - 00 - 0158

Enforcement-Sensitive Information Attached

Memorandum

Date: May 26, 1998

Subject: Request to Conduct a Removal Action at the GE–Housatonic River Site ("Upper Reach Removal Action"), Pittsfield, Massachusetts—**Combined Action and EE/CA Approval Memorandum**

From: Dean Tagliaferro, On-Scene Coordinator Dean Tagliaferro
Site Evaluation and Response Section I, OSRR

To: Patricia L. Meaney, Director
Office of Site Remediation and Restoration

I. Purpose

The purpose of this Memorandum is to request and document approval for the proposed removal action described herein and also to authorize EPA to conduct an engineering evaluation/cost analysis (EE/CA) to evaluate additional removal action activities for the GE–Housatonic River Site (the "Site"), Pittsfield, Massachusetts.

The proposed removal action covers only a portion of the overall Site proposed for the National Priorities List (NPL). Specifically, the "Upper Reach Removal Site" is defined as the section of the East Branch of Housatonic River from Newell Street, Pittsfield, to the confluence of the East and West Branches of the Housatonic River (the "Upper Reach"), the associated riverbanks and floodplains, all potential sources of contamination to the Upper Reach, and other areas necessary to conduct the removal action including, without limitation, General Electric's (GE) manufacturing facility (required for source control, soil and sediment staging, and dewatering and/or treatment). The distance from Newell Street to the confluence of the East and West Branches of the Housatonic is approximately two miles.

EPA will seek to have GE, the responsible party at the Site, perform the following phase of the proposed removal action:

1. Implement temporary measures to limit access and exposure to contaminated sediments, bank and floodplain soils located between Newell Street and the confluence with the West Branch of the Housatonic River;
2. Eliminate or mitigate all current and potential sources of polychlorinated biphenyls (PCBs) and other hazardous substances from entering into the East Branch of the Housatonic River and/or Housatonic River sediments;

3. Develop and implement a monitoring plan(s) to assess compliance with the performance standards for source control measures specified in item two above; and,
4. Remove contaminated sediments and bank soils from the Newell Street bridge to the Lyman Street bridge (a distance of approximately 0.5 mile).

Approval of this Memorandum will also authorize EPA to concurrently conduct an EE/CA to evaluate alternatives to mitigate the human health and environmental threat posed by the existing high levels of PCBs and other hazardous substances in river sediments, banks and floodplain soils for the remaining 1.5 miles of the Upper Reach Removal Site (i.e., from Lyman Street to the confluence). EPA will make a final decision for this phase of the removal action following the completion of the EE/CA and a public comment period. EPA will document this decision in a subsequent Action Memorandum.

This proposed removal action will eliminate or mitigate existing potential sources of contamination to the Housatonic River; prevent the recontamination of previously remediated floodplain properties and the further contamination of other floodplains; prevent the downstream migration of contaminated sediments and riverbank soils; and mitigate the human health and environmental threat posed by the existing high levels of polychlorinated biphenyls (PCBs) and other hazardous substances in river sediments, banks and floodplain soils.

II. Site Conditions and Background

CERCLIS ID #: MAD002084093
Site ID #: 0167

A. Site Description

1. Physical Location and Site Characteristics

GE has operated a large-scale industrial facility in Pittsfield, Massachusetts since the early 1900's. The primary industrial activities at the Pittsfield facility included manufacturing and servicing of power transformers, defense and aerospace (ordnance), and plastics. Currently, GE's World Headquarters for Plastics is located at this facility, the defense and aerospace division was sold (General Dynamics is currently operating in the defense and aerospace portion of the former GE complex), and the transformer division is closed.

The overall NPL Site, as proposed for the listing, consists of the 254-acre GE manufacturing facility; the Housatonic River, riverbanks, and associated floodplains from Pittsfield, Massachusetts to Rising Pond Dam (approximately 30 miles); former river oxbows that have been filled; neighboring commercial properties; Allendale School; Silver Lake (a 26-acre Commonwealth of Massachusetts designated Great Pond); and other properties or areas that have become contaminated as a result of GE's facility operations. (See Figures 1 and 2).

As mentioned above, the Upper Reach Removal Site includes the section of the East Branch of Housatonic River, riverbanks, and associated floodplains, from Newell Street to the confluence with the West Branch of the Housatonic River (approximately 2 miles); and all potential sources of PCB contamination to the Upper Reach. In this area, the channel width of the Housatonic River is 40 to 60 feet. The average daily flow is 120 cubic feet per second (cfs), ranging from a low monthly flow of 46 cfs to a 10-year high flow of 4,200 cfs. The water depth in the River during average flows ranges from one to four feet, however, exposed sediments and sand bars are present in low flow conditions.

The Upper Reach Removal Site can be divided into four sections: Newell Street to Lyman Street (approximately 0.5 mile); Lyman Street to Elm Street (approximately 0.5 mile); Elm Street to Dawes Avenue (approximately 0.4 mile); and Dawes Avenue to the confluence (approximately 0.6 mile). See Figure 2.

The area from Newell Street to Lyman Street is primarily commercial, although there is one recreational property. GE's property abuts the River to the north. Several commercial properties, Hibbard playground, and additional GE property abut the river to the south. There are relatively steep banks and minimal floodplains in this area. There is chain-link fencing on both sides of the River.

From Lyman Street to Elm Street, the land use is residential, commercial, industrial or undeveloped, and the land adjacent to the floodplains includes residential properties. While there is some fencing on a portion of the northern riverbank behind commercial properties, the river/riverbank is easily accessible. There is unrestricted access to the southern riverbank.

From Elm Street to Dawes Avenue, the floodplain properties are primarily residential, although there are commercial properties present. The riverbanks in this area are generally steep and the floodplain is relatively narrow. Access to the river/riverbank is unrestricted.

From Dawes Avenue to the confluence, the floodplain properties are residential or recreational. The riverbanks in this area are relatively low, resulting in a broad floodplain. Access is unrestricted.

In all, there are approximately 40 residential properties located within or adjacent to the floodplain in the Upper Reach. For additional information on the characteristics of this stretch of the River, see the memo from Mary Ballew, EPA, and Margaret Harvey, Massachusetts Department Environmental Protection (DEP), titled *Evaluation of Human Health Risks from Exposure to Elevated Levels of PCBs in Housatonic River Sediment, Bank Soils and Floodplain Soils in Reaches 3-1 to 4-6 (Newell Street to the confluence of the East and West Branches)*, May 14, 1998 ("*Evaluation of Human Health Risks Memo*"), and the *Upper Reach - Housatonic River Ecological Risk Assessment*, by Roy F. Weston, Inc., May 1998, both of which are included in the Administrative Record.

2. Site History

The Site has been subject to numerous investigations dating back to the early 1980s. The investigations were consolidated under two regulatory mechanisms: An Administrative Consent Order (the "ACO") with the Massachusetts DEP and a Corrective Action Permit with EPA pursuant to the Resource Conservation and Recovery Act (RCRA).

On February 8, 1991, EPA issued a RCRA Corrective Action Permit (the "Permit") to the GE-Pittsfield facility. The Permit established a process and a schedule for the assessment and remediation of releases of hazardous wastes at, and from, the GE facility. GE appealed the Permit and it was subsequently modified and reissued effective January 3, 1994. The areas incorporated into the Permit include the 254-acre facility, Silver Lake, the Housatonic River and its floodplain, adjacent wetlands and all sediments contaminated by PCBs migrating from the GE Facility. The Permit specifically addresses seven study areas: Unkamet Brook (US EPA Area 1), The Hill 78 Landfill (US EPA Area 2), East Street Area I (US EPA Area 3), East Street Area II (US EPA Area 4), GE Lyman Street Parking Lot (US EPA Area 5A), Newell Street Parking Lot (Newell Street II)(US EPA Area 5B), and the Housatonic River and Silver Lake (US EPA Area 6). (See Figure 1)

The ACO between GE and the Massachusetts DEP became effective in May 1990. The ACO covers all the study areas in the EPA Corrective Action Permit and three additional study areas: Newell Street Area I; the Former Housatonic River Oxbows; and Allendale School Property. In 1997, "off-site" properties that received contaminated fill from GE were also subject to investigations and cleanup under the ACO.

GE has performed numerous investigations and short term cleanups (see Section II.B.) under the EPA Corrective Action Permit and/or the ACO with the Massachusetts DEP. The results of these actions and investigations are available in numerous documents, reports, letters, data packages, and other submittals to EPA and the Massachusetts DEP.

On September 25, 1997, EPA proposed the GE-Housatonic River Site for inclusion onto the NPL. The Site received a Hazard Ranking System score of 70.71. The proposed NPL Site covers all of the study areas listed in the EPA Corrective Action Permit and the ACO. In October 1997, EPA, in combination with the Department of Justice, the Commonwealth of Massachusetts, the State of Connecticut, the City of Pittsfield and the State and Federal Trustees formed an intergovernmental team and, with the assistance of a mediator, initiated negotiations with GE. The objective of the negotiations was to achieve a comprehensive agreement for cleanup of the entire Site. In the interim, the public comment period on the proposed NPL listing was extended until May 1, 1998. On April 2, 1998, the negotiations were terminated without an agreement between the parties.

The public comment period ended May 1, 1998. EPA is currently evaluating the public comments and a decision on whether or not to list the Site as final on the NPL is expected in six to twelve months.

3. Removal Site Evaluation

As mentioned above, GE has submitted numerous documents, reports, and data packages to EPA and the Massachusetts DEP over the past 17 years. In addition, EPA has performed additional assessment activities at the Upper Reach Removal Site. The Removal Site Evaluation described below is limited to the Upper Reach Removal Site. The primary contaminants of concern identified to date are PCBs.

Although GE performed many functions at the Pittsfield facility throughout the years, the activities of the Transformer Division were the likely primary source of PCB contamination. Briefly, GE's Transformer Division's activities included the construction and repair of electrical transformers utilizing dielectric fluids, some of which contained PCBs (primarily Aroclors 1254 and 1260). GE manufactured and serviced electrical transformers containing PCBs at this facility from approximately 1932 through 1977.

According to GE's reports, from 1932 through 1977 releases of PCBs reached the wastewater and storm systems associated with the facility and were subsequently conveyed to the East Branch of the Housatonic River and to Silver Lake (*Supplemental Phase II/RCRA Facility Investigation Report for Housatonic River and Silver Lake, Volume I*, by BBL, January 1996). Also, as documented by GE, in the late 1960's, a 1000 gallon storage tank of PCBs ruptured or imploded resulting in a release of PCBs in or around Building 68 and into the Housatonic River and its riverbank. GE responded to the spill at the time of release by excavating some of the impacted surface trap rock and river sediments, then transporting this material to a secure landfill. In 1996, however, additional contamination near Building 68 was discovered. (See Section II.B. for details on the Building 68 Removal Action performed in 1997/1998). Based on the light non-aqueous phase liquid (LNAPL) and dense non-aqueous phase liquid (DNAPL) plumes described below, it appears that there were additional releases of PCBs into the environment as well.

During the 1930's, approximately one mile of the Housatonic River from Newell Street to Elm Street was straightened and channelized to reduce flooding. This action resulted in eleven oxbows being isolated from the River channel. Some of these former oxbows were filled with material from GE (see November 27, 1996 letter from GE to the Massachusetts DEP *RE: Request for Information regarding Properties That May Have Received Fill form the General Electric Facility in Pittsfield*) later found to contain PCBs.

Potential Sources of PCBs to the Housatonic River. A review of the existing submittals provided by GE indicate that there are several known potential sources of PCBs to Housatonic River. These sources are:

1. The LNAPL and DNAPL plumes at the East Street Area 2/USEPA Area 4 portion of the Site. The LNAPL in this area originates from GE's manufacturing facility, flows toward the Housatonic River and extends into the banks of the River. GE has performed several activities in an attempt to limit the migration of the PCB-contaminated oil in this plume from entering into the Housatonic River. These include the installation of several recovery wells, a slurry wall, and construction of a groundwater treatment plant. To date, GE has collected more than 750,000 gallons of oil from this LNAPL plume. For the period July 1997 through December 1997, 15,000 gallons of oil were collected and 22,000,000 gallons of groundwater were treated. Despite these activities, the LNAPL plume currently presents a potential threat of release of PCBs to the River. GE has reported that "apparent bank seeps" were observed on July 3, 1997 and November 21, 1997 (*Occurrence of Oil at East Street Area 2/US EPA Area 4 - Fall, 1997*, by BBL, February 1998). In addition, Appendix A of this report states that in December 1997, small amounts of oil were observed in piezometers located in or adjacent to the riverbank and in one instance, a small amount of oil was detected in a piezometer located within the Housatonic River.

   There is also a DNAPL plume in this area. The Housatonic River may be serving as a preferential ground water discharge pathway, and at least seasonally, hydraulic conditions and preferential pathways may be such that the DNAPL could migrate to the Housatonic River.

2. The DNAPL plume west of Building 68 (East Street Area 2/USEPA Area 4 portion of the Site). DNAPL containing concentrations of PCBs as high as 623,700 ppm PCBs were discovered in late 1997 and early 1998 in two monitoring wells installed as part of the Building 68 Removal Action (*Report on Supplemental Characterization Activities - Building 68 Area,* by BBL, Draft-February 1998 and a letter dated March 25, 1998 from A. Silfer to D. Tagliaferro *RE: Building 68 Area Supplemental Characterization Activities - Status Report and Proposal)*. These wells are located within 15 lateral feet of the River. The DNAPL is located at an elevation slightly below that of the Housatonic River sediment surface. Although GE is still investigating the DNAPL under the UAO for the Building 68 Removal Action, this DNAPL presents a current threat of release of PCBs to the Housatonic River.

3. The LNAPL and DNAPL plumes at the Lyman Street Parking lot. GE has documented the presence of LNAPL and DNAPL plumes at the Lyman Street/USEPA Area 5A portion of the Site (*Effectiveness Evaluation of Short Term Measures Lyman Street (Oxbow Area D), Pittsfield, Massachusetts* by Golder Associates, October 1997, *MCP*

Supplemental Phase II Report for Lyman Street/USEPA Area 5A Site by BBL, June 1996, and *Addendum to MCP Supplemental Phase II/RCRA Facility Investigation for Lyman Street/USEPA Area 5A Site, Volume I,* by BBL, October 1997). The DNAPL contains concentrations of PCBs as high as 66% (BBL, June 1996). The LNAPL contains concentrations of PCBs as high as 27,000 ppm (BBL, October 1997) and flows toward the Housatonic River. GE has installed three recovery wells in this area, and in the last reporting period (August 1996 through July 1997), GE collected 1,022 gallons of LNAPL and 40 gallons of DNAPL (Golder, October 1997). Although GE has installed recovery wells, the plumes still pose a threat of release of PCBs to the Housatonic River. Figure 10 of the October 1997 BBL Report indicates the LNAPL plume extends to the edge of the Housatonic River and that the DNAPL plume extends to within 40 feet of the River. The *April 1998 Monthly Status Report* submitted by GE on May 14, 1998 states that "Apparent bank seepage was observed during one weekly inspection. Sheens were contained within the boomed area." This report also states that LNAPL was measured in piezometers P-1, P-3 and P-4, which are located outside of the recovery wells and approximately ten feet from the Housatonic River.

4. The Silver Lake outfall. The sediments in Silver Lake are contaminated with PCBs as high as 20,689 ppm and numerous other contaminants of concern (*Supplemental Phase II/RCRA facility Investigation Report for the Housatonic River and Silver Lake*, Volume I by BBL, January 1996). Although GE sampled the water flowing through the outfall from Silver Lake to the Housatonic River and did not detect significant concentrations of PCBs, this may not represent the worst-case situation (such as lake turnover). PCBs may migrate via sediment or suspended solid transport through the outfall in addition to the dissolved phase present in surface water.

5. The DNAPL plume at the Newell Street Area II/USEPA Area 5b portion of the Site. GE has documented the presence of a DNAPL plume in this area that contains concentrations of PCBs as high as 388,500 ppm *(Report on Supplemental Characterization Activities - Building 68 Area, by BBL, Draft-February 1998).* GE currently measures the thickness of the DNAPL in four monitoring wells weekly. If the DNAPL is greater that one foot, GE removes DNAPL from the wells. In April 1998, GE removed 36.1 gallons of DNAPL from these wells (*April 1998 Monthly Status Report*, submitted by GE, May 14, 1998). The elevation of the DNAPL is at 950 feet above mean sea level (MSL), which is lower than the sediment surface in the Housatonic River (approximately 969 feet above MSL). As stated above, the Housatonic River may be serving as a preferential ground water discharge pathway, and at least seasonally, hydraulic conditions and preferential pathways may be such that the DNAPL could migrate to the Housatonic River.

6. Heavily contaminated soils in the banks of the Housatonic River including the filled in portions of oxbows A through I. GE has documented high levels of PCBs in contaminated soils in the riverbanks in the subject area, especially in the former oxbows.

The maximum concentrations reported in riverbank samples from potential source areas are summarized in the table below.

Study Area	Surficial Sample (Sampling Location)	Subsurface Sample (Sampling Location)	Report Reference
Lyman Street	3,400 ppm (LS-41)	1,000 ppm (LS-35)	Addendum to the Phase II/RFI, 10/97 (by BBL)
Newell Street II	7,760 ppm (RB-10)	1,400 ppm (RB-7)	3/12/97 PCB Data Submittal, from R. Gates, GE
Newell Street I	76 ppm (RB-4)	350 ppm (SZ-3)	MCP Supplemental Phase II Report, 9/97 (by BBL)
Building 68 Area (East)	146 ppm (3-6C-EB-10)	287 ppm (3-6C-EB-12)	Building 68 Removal Action Work Plan, 5/97 (by BBL)
Building 68 Area (West)	464 ppm (3-6C-EB-22)	622 ppm (3-6C-EB-22)	Building 68 - Supplemental Char. 2/98 (by BBL)
Oxbows A, B, C	47 ppm (I9-4-14A)	N/A	MCP Interim Phase II Oxbow Report, 2/96 (by BBL)

(NOTE: These surficial bank samples were **not** used in the summary table for bank/floodplain soils listed below and were not used in the *Evaluation of Human Health Risks Memo* data set. If the data were included, it would increase the average concentration of PCBs in bank soils, and possibly increase the risk as calculated for the bank/floodplain soils for the Newell Street to Elm Street sub-reach.)

In addition, PCBs have been detected in former oxbow soils in concentrations as high as 290,000 ppm (both at Lyman Street, sampling location LS-11 and Newell Street I, sampling location QP-9).

The contaminated bank soils pose a threat of release of PCBs into the Housatonic River via erosion and storm water runoff.

7. Dissolved contamination in groundwater migrating into the Housatonic River. Due to the presence of several DNAPL plumes, LNAPL plumes, and heavily contaminated soils, PCBs are present in low levels in the groundwater (Figure 7 of the *Addendum to MCP Supplemental Phase II/RCRA Facility Investigation Proposal for Lyman Street/USEPA Area 5A Site*, Volume I of V, by BBL, October 1997). Although the concentration of PCBs are low, the volume of groundwater discharging to the Housatonic River may be large, and the total loading of PCBs may be significant. Therefore, this represents a potential source of PCBs to the Housatonic River.

There is a possibility that other sources exist that may require mitigation to enable the sediment removal to proceed without future recontamination.

Sediment Sampling Data. The sediment data for the Housatonic River in the Upper Reach is summarized in the table below. This data **excludes** the highly contaminated sediments removed as part of the Building 68 Removal Action. The data set for "surficial sediments" consists of 110 sample locations and includes samples collected by both GE and EPA contractors. Of these, PCBs were detected in all but three samples.

	Average PCB Concentration (ppm)	**Maximum PCB Concentration (ppm)**
Surficial Sediments (Newell to Lyman Street)(1)	15	100
Surficial Sediments (Lyman to Elm Street)(1)	20	140
Surficial Sediments (Elm Street to Dawes Avenue)(1)	89	905
Surficial Sediments (Dawes to the confluence)(1)	16	132
Surficial Sediments (Newell to the confluence)(1)	26	905
Surface & Subsurface Sediments (Newell to Holmes Road)	70 (2)	7,720 (3)

(1) The data source is the *Evaluation of Human Health Risks Memo*.
(2) The data source is Table 2-1, *Work Plan for the Ecological Risk Assessment of the Housatonic River Site*, Volume I, by ChemRisk, May 1997. NOTE: This 70 ppm average PCB

concentration is for the stretch of the river from Newell Street to Holmes Road, which is beyond the confluence. However, a review of the data indicates that the 70 ppm is representative of the surface and subsurface contamination from Newell Street to the confluence.
(3) The data source is Figure 4-1 Building 68 Removal Action Work Plan, by BBL, May 1997

Although the surficial contamination in the area from Newell Street to Lyman Street is consistent with surficial contamination in the next 1.5 miles, the subsurface contamination is greater between Newell and Lyman Street. This is likely due to this section of the River abutting all the historical and potentially continuing sources of PCBs to the Housatonic River identified above except the Silver Lake outfall and Oxbows A, B, and C. For example, in the two samples adjacent to the Lyman Street LNAPL plume (which is also the location of former oxbow D), PCBs at depth were in the 100 to 300 ppm range. Also, PCBs are currently present at depth in sediments close to the Building 68 excavation at extremely high concentrations (e.g., 7,720 ppm, 1,290 ppm).

Bank/Floodplain Soils. The surficial riverbank and floodplain data for the subject area is summarized in the table below. This data **excludes** bank soils removed as part of the Building 68 Removal Action, floodplain soils excavated by GE under previous short-term measures/immediate response actions (see Section II.B), and also the bank sampling data included in GE reports for study areas other than the Housatonic River (e.g., Lyman Street, Oxbows A, B, & C, Newell Street I and II, etc.). The data set includes samples collected by both EPA and GE contractors at 148 locations.

Location of Bank/Floodplain Soil Samples	Average PCB Concentration (ppm)	Maximum PCB Concentration (ppm)
Newell Street to Lyman Street	410	5,800
Lyman Street to Elm Street	18	43
Elm Street to Dawes Avenue	36	377
Dawes Avenue to the confluence	23	160
Newell Street to confluence	75	5,800

The data source is the *Evaluation of Human Health Risks Memo*.

4. Release or Threatened Release into the Environment of a Hazardous Substance, or, Pollutant or Contaminant

The primary contaminants of concern are PCBs. PCBs are hazardous substances as defined by §101(14) of CERCLA. PCBs are present in the Housatonic River sediments, banks and

floodplain soils. Therefore, a release into the environment of hazardous substances has already occurred.

As discussed above, the source areas represent a continuing threat of release of PCBs into the Housatonic River (i.e., a "threat of release into the environment"). The PCBs that have already been released into the Housatonic River continue to be transported downstream and onto the riverbanks and floodplains by mechanisms including erosion of the sediments and periodic flooding (see the bullet item "Weather conditions that may cause hazardous substances or pollutants or contaminants to migrate or be released" in Section III of this Memorandum).

B. Other Actions to Date

GE has performed numerous activities in an attempt to reduce the migration of the LNAPL and DNAPL plumes from entering into the Housatonic River. These include the installation of recovery wells, the construction of a groundwater treatment plant and the installation of a small section of a slurry wall. To date, GE has collected more than 750,000 gallons of PCB-contaminated oil from the recovery wells. GE has installed chain-link fencing along the top of the riverbank on both sides of the River from Newell Street to Lyman Street in an attempt to limit access to this area.

GE has performed short-term measures (also referred to as immediate response actions) at approximately fourteen residential properties located within the subject floodplain. Twelve of these short-term measures consisted of the excavation of contaminated floodplain soil. At approximately seven of these properties, the excavation was limited to the portion of the residential property judged by GE to be accessible to residents (e.g., the "lawn area"), and contaminated soil remains on these properties between the "lawn area" and the River. At the other two properties, GE planted a new hedge row in an attempt to reduce access from the "lawn area" to the contaminated riverbank/floodplain area.

From June 1997 through the present, GE has been performing a removal action under a Unilateral Administrative Order from EPA at the Building 68 Site. The Building 68 Site is a 550-foot section of the River between Newell Street and Lyman Street (and is therefore within the subject area). At the building 68 Site, GE excavated and properly disposed of 10,796 tons of PCB-contaminated soils and sediments. Restoration activities and investigations of the DNAPL are currently underway.

C. State and Local Authorities' Roles

As mentioned above, the Massachusetts DEP, the Connecticut DEP and other State Agencies have been extensively involved with investigations and activities at the Site for many years. The Massachusetts DEP has been consulted on this proposed removal action and concurs and supports EPA's proposed actions.

The City of Pittsfield was a party to the negotiations with GE, and has been extensively involved in the ongoing investigations and cleanups at the Site. The proposed removal action will be coordinated with City officials.

Federal, state and local officials have taken numerous actions to keep the public informed of the status, investigations, and short-term cleanups being performed at the overall Site. These actions include public meetings, newsletters, and the availability of records in local repositories. In addition, there has been substantial coverage in both the local and national press.

III. Threats to Public Health or Welfare or the Environment

Conditions present at the Upper Reach Removal Site meet the criteria for a removal action set forth in 40 CFR §300.415(b)(2) as described below.

- "Actual or potential exposure to nearby human populations, animals, or the food chain from hazardous substances, pollutants or contaminants" [300.415(b)(2)(i)].

Exposure to nearby human populations. As stated above, high levels of PCBs were detected in surficial sediments, bank soils, and floodplain samples throughout the subject area. Much of the contaminated riverbank and floodplain are part of, or abut, residential properties, and in a majority of the area, access is unrestricted. Therefore, residents, recreational users, and trespassers are exposed to the high levels of PCBs. The potential for these exposures are documented in a May 20, 1998 memorandum to the file form Margaret Harvey, Massachusetts DEP titled *Report of Site Visit to Housatonic River, Pittsfield, MA on April 28, 1998 (DEP Site Number 1-0147)*. The concentrations of PCBs greatly exceed standards and cleanup levels considered protective of public health including: the Massachusetts Contingency Plan default (Method 1) cleanup standard of two ppm for both residential and industrial soils, EPA's PCB Spill Cleanup Policy, 40 CFR Part 761, (10 ppm in residential areas— if capped, 25 ppm in industrial areas), and the one ppm preliminary remediation goal for residential areas (10 to 25 ppm for industrial use) specified in EPA OSWER directive 9355.4-01.

Numerous studies on the health effects of PCBs have been performed. Studies of workers exposed to PCBs suggest that PCBs can cause skin irritations, such as acne and rashes, and cause irritation of the nose and lungs. Other human health effects that have been reported include general weakness, respiratory symptoms, altered immune response, and damage to the liver *(Toxicological Profile for Polychlorinated Biphenyls (Update)*, by the U.S. Department of Health and Human Services/Agency for Toxic Substances and Disease Registry, September 1997 ("*ATSDR Toxicological Profile*")). There are also studies which have reported neurological, behavioral, and developmental abnormalities in children born to mothers who ate PCB-contaminated fish. However, in these studies, the mothers' exposures to PCBs were estimated and not measured directly *(Evaluation of Human Health Risks Memo* and the *ATSDR Toxicological Profile)*.

PCBs have been shown to produce a wide variety of adverse effects in many test animals, including severe acne, liver, stomach and thyroid damage, and reproductive and developmental effects. Monkeys, which are physiologically more similar to humans than other animals, have developed adverse immunological and neurological effects, as well as skin and eye irritations after being fed PCBs. PCBs may cause similar health effects in people *(Evaluation of Human Health Risks Memo* and the *ATSDR Toxicological Profile)*.

PCBs have also been found to cause cancer in animals. Based on the animal studies, the United States Department of Health and Human Services has determined that PCBs may reasonably be anticipated to be human carcinogens. Similarly, EPA classifies PCBs as a probable human carcinogen, and the International Agency for Research on Cancer has determined that PCBs are probably carcinogenic to humans *(ATSDR Toxicological Profile)*.

Therefore, exposure to these high levels of PCBs increases both the cancer risks and non-cancer risks to area residents, recreational users and trespassers.

To further evaluate health threats, EPA, in conjunction with the Massachusetts DEP, performed a site-specific human health evaluation (see *Evaluation of Human Health Risks Memo*). This evaluation divided the Upper Reach Removal Site into three sub-reaches based on potential exposure scenarios, and assessed the risks to human health in each sub-reach. A summary of the results are presented in the table below.

Sub-reach A (Newell Street to Elm Street)

	Soil	Sediment
Hazard Index (subchronic non-cancer risk)	200	3
Hazard Index (chronic non-cancer risk)	200	4
Excess Lifetime Cancer Risk	1×10^{-3}	2×10^{-5}

Sub-reach B (Elm Street to Dawes Avenue)

	Soil	Sediment
Hazard Index (subchronic non-cancer risk)	70	200
Hazard Index (chronic non-cancer risk)	90	100
Excess Lifetime Cancer Risk	4×10^{-4}	5×10^{-4}

Sub-reach C (Dawes Avenue to the confluence)

	Soil	Sediment
Hazard Index (subchronic non-cancer risk)	20	9
Hazard Index (chronic non-cancer risk)	30	6
Excess Lifetime Cancer Risk	7×10^{-5}	2×10^{-5}

Risk results rounded to one significant figure.
Chronic is defined as a 5-, 7- or 9-year exposure (see *Evaluation of Human Health Risks Memo*).
Subchronic is defined as a 3-month exposure.

A hazard index of one is the threshold above which EPA is justified in taking an action based on non-cancer health risks. As is presented above, hazard indices for both chronic and subchronic scenarios exceed this level in all three sub-reaches, for both soil and sediment. In four of the exposure scenarios, the hazard index is at least 100 times or greater than the threshold value. In addition, excess lifelike cancer risks exceed EPA's range of acceptable risk (1×10^{-4} to 1×10^{-6}) in three of six exposure scenarios. The *Evaluation of Human Health Risks Memo* concludes "that short-term exposures to elevated levels of PCBs in Housatonic River floodplain soils, riverbank soils and river sediments in reaches 3-1 to 4-6 [which is the same as the Upper Reach Removal Site] in Pittsfield, Massachusetts, present significant risks to human health".

Exposure to . . . animals or the food chain. Fish sampling in the Housatonic River has confirmed that there is an actual exposure of PCBs to "animals and the food chain". Sampling has indicated that the average concentration of PCBs in adult largemouth bass in Woods Pond (which is approximately 12 miles downstream of the GE facility) is 87 ppm, while the range of PCB concentrations is from 13.2 to 206 ppm. Even the young-of-the-year fish that were collected by GE in 1994 and 1996 in the vicinity of New Lenox Road (approximately 5 miles downstream of the Upper Reach) have concentrations of PCBs ranging from 21 to 36 ppm. As a point of reference, the FDA action level for fish tissue for human market consumption (not risk based) is two ppm. There is also a fish consumption advisory for PCBs in effect for approximately 80 miles of the Housatonic River beginning at the GE facility. (See *Upper Reach - Housatonic River Ecological Risk Assessment*, by Roy F. Weston, Inc., May 1998.)

EPA also assessed potential health risks for people consuming fish from the Housatonic River as described in Appendix A of the *Evaluation of Human Health Risks Memo*. This memo states that, "In sum, doses estimated for children and adults who ingest contaminated fish from the Housatonic River are higher than those received by the monkeys in the PCB noncancer toxicity study that demonstrated adverse health effects. This is true even in the case of children who ingest contaminated fish over the course of one summer. These exposure estimates raise significant concerns regarding potential health effects in children and adults who ingest contaminated fish from the Housatonic River."

- "Actual or potential contamination of drinking water supplies or sensitive ecosystems" [300.415(b)(2)(ii)].

The *Upper Reach - Housatonic River Ecological Risk Assessment* identifies numerous exceedences of ambient water quality criteria (AWQC) and various sediment benchmarks and guidelines as identified below.

- During the twelve-month period from June 1996 through May 1997, (during which GE conducted the standard surface water monitoring for 10 of the 12 months), surface water samples collected from the Elm Street Bridge had nine exceedences of the AWQC as compared to five exceedences at the upstream control location. (Note: samples collected after May 1997 were not evaluated because work in the river associated with the Building 68 Removal Action began in June 1997.)
- As stated above, 110 surficial sediment samples were collected in the Upper Reach. At all 110 locations, (including half the sample quantitation limit for the three non-detect samples), PCB concentrations exceeded the National Oceanographic and Atmospheric Administration (NOAA) Effect Range-Low guideline and 106 of 110 samples exceeded NOAA's Effect Range-Medium guideline.
- The Ontario Ministry of the Environment and Energy (OMEE) sediment guideline for the lowest effect level (LEL) for PCBs was exceeded in 108 of 110 samples and the severe effect level (SEL) was exceeded in 70 of 110 samples. The severe effect level is that at which pronounced disturbance of the sediment-dwelling community can be expected, affecting the majority of benthic species. Sediments with these concentrations are considered "heavily contaminated".
- EPA's draft sediment quality criteria value calculated for PCBs using the equilibrium partitioning methodology was exceeded in 108 of 110 sample locations.

It has been extensively documented in the peer reviewed literature that PCBs in the ecosystem cause a variety of adverse effects to ecological receptors including: death, birth defects, reproductive failure and impairment, liver damage, tumors, behavioral modifications (such as abandonment of nest building activities) and a "wasting" syndrome *(Upper Reach - Housatonic River Ecological Risk Assessment)*. Furthermore, The *Upper Reach - Housatonic River Ecological Risk Assessment* states that as a result of PCB contamination, the potential for adverse effects on the fish, birds (e.g., kingfisher and blue heron), and semi-aquatic mammals (e.g., the river otter) in the Upper Reach of the Housatonic River is likely.

- "High levels of hazardous substances or pollutants or contaminants in soils largely at or near the surface that may migrate" [300.415(b)(2)(iv)].

As stated above, there are levels of PCBs as high as 5,800 ppm in surficial riverbank soils in the upstream part of the Upper Reach (between Newell and Lyman Street) and surficial riverbank soils as high as 377 ppm have been detected at downstream locations. Areas of this highly

contaminated bank soil already have been observed to erode and discharge into the Housatonic River and are likely to continue to do so. After entering into Housatonic River, the contamination will either be deposited on already contaminated river sediments, or onto other downstream riverbanks or floodplains.

- "Weather conditions that may cause hazardous substances or pollutants or contaminants to migrate or be released" [300.415(b)(2)(v)].

PCB contaminated soils and sediments continue to migrate and redeposit at downstream sediment, riverbank and floodplain locations as a result of natural erosion. This situation is exacerbated by periodic flooding of the Housatonic River, which deposits contaminated sediments on floodplain properties. The River is projected to overtop its banks every two to ten years, depending on stream morphology (e.g., high banks vs. low banks), for most of the two-mile stretch (see Attachment 4 of the document titled *Memorandum for the Record, Subject: The Remediation and Restoration of the Housatonic River (Newell Street to the confluence with the West Branch), Pittsfield, MA*, by Mark J. Otis, May 6, 1998). The residential properties include the riverbanks themselves and therefore even flooding that does not "overtop" the banks will deposit contaminated sediments on a portion of the residential properties.

There is both historical and current sampling data that indicates that migration of contaminated material has and is occurring. First, sampling data clearly indicates that the floodplain properties are contaminated. This is acknowledged in a report by GE's consultant which states "sampling and hydraulic modeling of the River between the GE facility and Woods Pond Dam has shown PCBs to exist primarily in the 10-year floodplain." *(Supplemental Phase II/RCRA facility Investigation Report for the Housatonic River and Silver Lake*, Volume I by BBL, January 1996). Secondly, EPA recently re-sampled riverbank areas previously remediated by GE as a short-term measure. The area sampled is along Deming Street. As part of GE's action, gabion baskets were constructed in two tiers along the riverbank. In February 1998, after a high water event, EPA personnel collected six samples from sediment deposits on the lower gabions. PCB concentration in these six samples ranged from two to 45 ppm (Memo from J. Pimpare, EPA to B. Olson, EPA dated April 7, 1998).

IV. Endangerment Determination

Actual or threatened releases of hazardous substances from this Site, if not addressed by implementing the response actions selected in this Action Memorandum, may present an imminent and substantial endangerment to public health, or welfare, or to the environment.

V. Proposed Actions and Estimated Costs

A. Proposed Actions

1. Proposed Action Description

Objectives

There are four objectives to the proposed removal action: to mitigate the human health and environmental threat posed by the existing high levels of PCBs in river sediments, and bank and floodplain soils; to eliminate or mitigate existing sources of contamination to the Upper Reach of the Housatonic River; to prevent the recontamination of previously remediated floodplain properties and further contamination of other floodplains; and, to prevent the downstream migration of contaminated sediments and bank soils.

Evaluation of Alternatives

EPA requested assistance from the United States Army Corps of Engineers (US ACE) in the evaluation of options for the remediation of the Housatonic River and associated floodplains. The US ACE documented their evaluation in a report titled *Memorandum for the Record, Subject: The Remediation and Restoration of the Housatonic River (Newell Street to the confluence with the West Branch), Pittsfield, MA*, by Mark J. Otis, May 6, 1998. This memo describes the US ACE's evaluation of the following six alternatives:

- No action
- Monitored natural attenuation
- Capping
- Removal of all contaminated sediments and soils
- Removal of two feet of contaminated sediments and bank soils
- Removal of two feet of contaminated soils, capping the residual contamination and backfilling to grade.

EPA evaluated these options and determined that no action and monitored natural attenuation are not viable options because the human health and environmental threats currently posed by the PCB-contaminated soils and sediments warrant immediate action. Additionally, the US ACE estimated that monitored natural attenuation would not result in acceptable levels in the sediments for approximately 500 years. While the US ACE recommended the removal of two feet of contaminated soils, capping the residual contamination and backfilling to grade throughout the entire two-mile stretch, EPA determined that a phased removal action is appropriate.

Due to the continuing threat posed by the existing sources of contamination to the River (e.g., the LNAPL plumes, contaminated bank soils, etc.), and the likelihood of continued downstream migration of PCBs due to mechanisms such as erosion and flooding, it is necessary to initiate source control and additional upstream response actions in the first ½ mile immediately. The source control, riverbank, and river sediment activities in the area between Newell Street and Lyman Street (Phase I) need to be addressed immediately and in a coordinated manner for the following reasons:

- This area is upstream of the remaining 1.5 miles also subject to the proposed removal action and, to prevent recontamination, work in downstream areas cannot be initiated until work in this section is completed. A coordinated response will result in completing the 0.5 mile area in the shortest amount of time.
- This area contains a majority of the potential sources and the most heavily contaminated bank soils and sediments at depth.
- The potential sources of contamination, the riverbanks and sediments in this 0.5 mile section are geologically and hydrologically interrelated, and therefore, response actions need to be integrated. For example, removing heavily contaminated bank soils at Lyman Street without evaluating the potential impacts to the existing NAPL and groundwater pumping systems, may maintain or increase releases of NAPL into the River. Furthermore, engineering controls, construction equipment, and logistical problems are expected to be similar for both riverbank and sediment mitigation activities.
- Performing the response actions in a coordinated manner would result in the least amount of disruption to the neighborhood; and may result in obtaining access to non GE-owned property, if required, once instead of twice.
- Tree clearing and restoration activities can be performed once instead of several times.

EPA estimates Phase I actions will require greater than six months to complete. Thus, a planning period of more than six months exists before comprehensive removal activities can be initiated for the 1.5 miles of the Site located between Lyman Street and the confluence with the West Branch of the Housatonic River (Phase II of the removal action). Therefore, in accordance with §300.415(b)(4) of the NCP, an EE/CA will be conducted to further evaluate alternatives for this 1.5 mile stretch.

EPA considered relying solely on temporary measures, such as fencing, warning signs, public education, etc. to limit the exposure of PCBs to residents and recreational and other users of the river and floodplain until final remedial actions are taken. While these temporary measures are necessary and appropriate to minimize exposure to PCBs while the EE/CA is performed, they do not eliminate the need to take more comprehensive removal activities because: their effectiveness decreases with time; residents may not be willing to leave fences in place in their backyards for long periods of time, if at all; monitoring and enforcement of warning signs and access restrictions in this area is impractical; these actions will not prevent previously remediated portions of properties from becoming recontaminated during a flood event; and these actions do

not eliminate the potential exposure pathways. Also, performing large scale floodplain and bank soil removal to limit exposure prior to implementing upstream actions will not be effective because of recontamination and logistical concerns.

Proposed Actions

Phase I

1. Perform actions to temporarily limit access and exposure to contaminated areas including the installation of fencing, repairs to existing fencing, installation of warning signs, inspection and maintenance of fences and warning signs, public education, covering of contaminated soils or soil removal. These actions shall be performed along both sides of the riverbanks/floodplains from Newell Street to approximately the confluence with the West Branch of the Housatonic River.
2. Eliminate or mitigate all current and potential sources of PCBs and other hazardous substances from entering into the Upper Reach of the Housatonic River and/or Housatonic River sediments.
3. Develop and implement a monitoring plan(s) to assess compliance with the performance standards for source control measures mentioned in item two above.
4. Remove contaminated sediments and bank soils from the Newell Street bridge to the Lyman Street bridge. The excavation and subsequent cap/cover will meet the following criteria:
   - Includes the installation of a continuous cap that effectively isolates the residual contamination from any ecological or human receptors. This includes preventing or minimizing the recontamination of sediments and bank soils by erosion, diffusion, advection, desorption of PCBs into the dissolved phase and re-entering the River system, or any other mechanism;
   - Includes the installation of a minimum one foot of backfill required for proper wetland restoration;
   - Does not result in the reduction of the River's cross section or flood storage capacity;
   - Allows for a margin of safety for the inaccuracies associated with the excavation and placing of the materials in these conditions.
   - Is consistent and is designed to be compatible with all source control measures.
   - Contributes to the efficient performance of any anticipated long term remedial actions.
5. Backfill and perform restoration of the river sediments and banks.
6. Treat/dispose of the contaminated sediments and soils. Any off-site disposal facilities used will be in compliance with EPA's Off-site Rule (40 CFR 300.440—Procedures for Planning and Implementing Off-Site Response Actions).

Phase II

EPA will conduct an EE/CA to further evaluate alternatives to mitigate the human health and environmental threat posed by the existing high levels of PCBs and other hazardous substances

in river sediments, banks and floodplain soils for the remaining 1.5 miles from Lyman Street to the confluence. These alternatives will include capping; excavation of all contaminated sediments and soils; and a combination of excavation, capping, and leaving some sediments, bank and floodplain soils in place. When the EE/CA is finalized, EPA will select a proposed action and conduct a 30 day public comment period. EPA will then respond to comments and document the selected Phase II removal action activities in a subsequent Action Memorandum.

Post-Removal Site Control

EPA expects that GE will be primarily responsible for post-removal site control (PRSC) as defined in Section 300.415(k) of the National Contingency Plan (NCP). Upon approval of this Action Memorandum, EPA's Remedial Program agrees to assume oversight responsibilities of PRSC activities. If the overall GE-Housatonic River Site does not get finalized on the NPL, then EPA, under other mechanisms, and/or the Massachusetts DEP will be requested to assume oversight responsibilities for PRSC. PRSC activities may include monitoring GE's compliance with the performance standards and maintenance plans.

2. Contribution to Remedial Performance

The mitigation or elimination of potential sources of PCB contamination to the Housatonic River is consistent with any conceivable long-term remedial action. The removal of sediments and bank soils between Newell Street and Lyman Street is necessary to ensure that this 0.5 mile stretch of the River is not a source of contamination to the downstream sediments, riverbanks and floodplain soils and to allow removal activities to proceed. The OSC will work closely with the RPM(s) and state personnel to ensure that removal activities will not impede future responses.

The immediacy of the human health and environmental threats dictate that a response action be initiated within six months. As stated above, the *Evaluation of Human Health Risks Memo* concluded that "short-term exposure to elevated levels of PCBs in Housatonic River floodplain soils, riverbank soils and river sediments . . . present significant risks to human health." Therefore, it is appropriate to perform this response action as a removal action rather than a remedial action.

This two-mile stretch of the River was segregated from the remaining 28 miles of the River for a removal action for the following reasons:

- Thorough human health and environmental risk evaluations/assessments have been completed and indicate that immediate action is required;
- There are continuing sources of PCB contamination in this stretch of the River;
- There is a high density of residential properties abutting this stretch of the River;
- Recent sampling has indicated that portions of some residential properties already remediated by GE have become recontaminated, and additional flooding may cause additional properties

already remediated or partially remediated by GE to become recontaminated (Note: all floodplain properties remediated or partially remediated by GE to date are within this two-mile stretch); and,

- The characteristics of the River (e.g., lower flows, minimal adjacent wetlands, steeper banks) change significantly after the confluence with the West Branch.

3. Description of Alternative Technologies

Alternative technologies may be feasible for the treatment of contaminated soils and sediments. The OSC will evaluate alternative technologies to determine if they are appropriate at this Site.

4. Applicable or Relevant and Appropriate Requirements (ARARs)

During the process of the removal action, State and federal ARARs will be identified. It is likely that the ARARs will be similar to those identified in Table 2-1 of the Building 68 Area Removal Action Work Plan, by BBL, May 1997. Upon identification of the ARARs, the OSC will determine the applicability and practicability of complying with each identified ARAR. The OSC will base his final decisions upon the criteria set forth in 40 CFR §300.415(j). The EE/CA will also identify and evaluate ARARs and again the OSC will determine the applicability and practicability of complying with each identified ARAR in accordance with 40 CFR §300.415(j).

5. Project Schedule

Removal action activities will be initiated as soon as practical. Implementation of source control measures and/or soil and sediment removal are expected to be initiated by November 1, 1998. EPA will initiate the EE/CA process within 14 days of approval of this Memorandum.

B. Estimated Costs

Since EPA will seek to have GE perform Phase I of the removal action, no funds are being requested to perform this Phase of the proposed removal action. Funding to monitor GE's performance will be required. In accordance with §300.415(k) of the NCP, the 12-month and $2,000,000 statutory limits to removal actions do not apply to PRP-lead removal actions. However, approximately $250,000 in funding will be required to perform the EE/CA described above. Funds expended to conduct an EE/CA are CERCLA §104(b)(1) monies and are not counted toward the $2 million statutory limit for removal actions.

VI. Expected Change in the Situation Should Action be Delayed or Not Taken

Delayed action will increase the health risks by allowing for the continuation of direct contact and ingestion of PCBs by residents and other people accessing the River, riverbanks and

floodplains in the Upper Reach. Furthermore, additional PCBs may enter the Housatonic River from the previously identified source areas and the contaminated sediments will continue to migrate downstream and continue to be deposited onto riverbanks and floodplains during storm events. In addition, significant exposure will continue to occur to ecological receptors within the Upper Reach, and downstream transport will add to the exposure of the ecosystem located downstream of the area subject to the proposed removal action.

VII. Enforcement — Intended for Internal Distribution Only

See attached.

VIII. Recommendation

This decision document represents the selection of certain removal action activities and authorizes EPA to conduct an EE/CA to evaluate additional removal activities for the Upper Reach portion of the overall GE–Housatonic River Site, in Pittsfield, Massachusetts. The proposed removal action was developed in accordance with CERCLA, as amended, and is not inconsistent with the NCP. This decision document is based on the administrative record for the Site. (See Appendix A for the Administrative Record File Index and the List of Selected Key Guidance Documents)

As stated in Section III, conditions at the Site meet the NCP §300.415(b)(2) criteria for a removal action in that there are:

- "Actual or potential exposure to nearby human populations, animals, or the food chain from hazardous substances, pollutants or contaminants" [300.415(b)(2)(i)];
- "Actual or potential contamination of drinking water supplies or sensitive ecosystems" [300.415(b)(2)(ii)];
- "High levels of hazardous substances or pollutants or contaminants in soils largely at or near the surface that may migrate" [300.415(b)(2)(iv)]; and,
- "Weather conditions that may cause hazardous substances or pollutants or contaminants to migrate or be released" [300.415(b)(2)(v)].

Therefore, I recommend approval of this removal action.

Approval: _____ Date: 5/26/98
Patricia L. Meaney, Director
Office of Site Remediation and Restoration

Disapproval: _____ Date: _____
Patricia L. Meaney, Director
Office of Site Remediation and Restoration

Attachments:

Enforcement Strategy (Confidential)
Figure 1: Site Plan
Figure 2: GE-Housatonic River Upper Reach Removal Site Location Map
Appendix A: Administrative Record File Index and Selected Key Guidance Documents

Figure 2

Housatonic River Upper Reach Removal Action Site Location Map

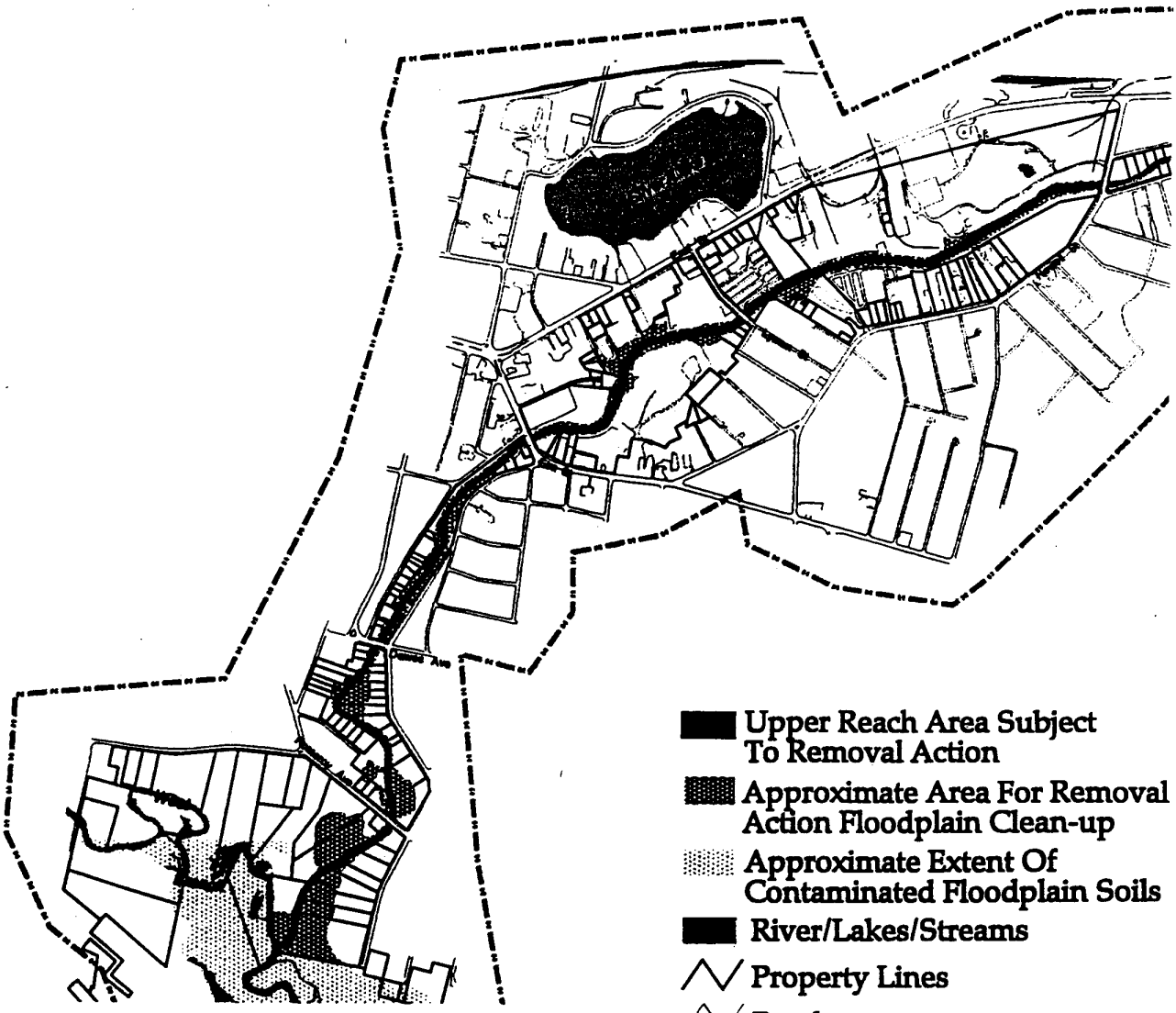

Upper Reach Area Subject To Removal Action

Approximate Area For Removal Action Floodplain Clean-up

Approximate Extent Of Contaminated Floodplain Soils

River/Lakes/Streams

Property Lines

Roads

500 0 500 1000 Feet

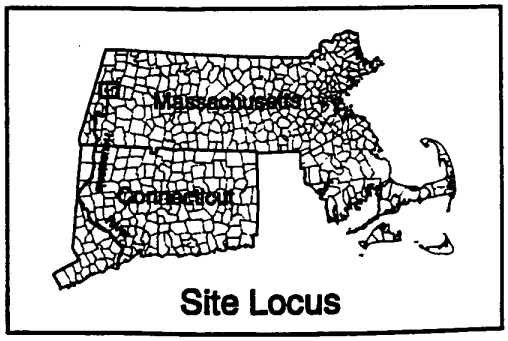

Site Locus

EPA
Region 1, New England

Data generated by MADEP and Blasland, Bouck and Lee, Inc.
Massachusetts State Plane Projection, NAD83

LEGEND:

SITE BOUNDARY

NOTES:

1. MAPPING IS BASED ON AERIAL PHOTOGRAPHS AND PHOTOGRAMMETRIC MAPPING BY LOCKWOOD MAPPING, INC. – FLOWN IN APRIL 1990; DATA PROVIDED BY GENERAL ELECTRIC COMPANY; AND BLASLAND AND BOUCK ENGINEERS, P.C. P.C. CONSTRUCTION PLANS.
2. NOT ALL PHYSICAL FEATURES SHOWN.
3. SITE BOUNDARIES ARE APPROXIMATE.

MCP UNKAMET BROOK AREA
(SITE NO. 1-0140)
USEPA AREA 1

MCP HILL 78 LANDFILL AREA
(SITE NO. 1-0714)
USEPA AREA 2

MCP ALLENDALE SCHOOL PROPERTY
(SITE NO. 1-0990)

MCP EAST STREET AREA 1
(SITE NO. 1-0140)
USEPA AREA 3

MCP EAST STREET AREA 2
(OXBOW AREA H)
(SITE NO. 1-0140)
USEPA AREA 4

MCP OXBOW AREA E
(SITE NO. 1-1055)

MCP LYMAN STREET PARKING LOT
(OXBOW AREA D)
(SITE NO. 1-0859)
USEPA AREA 5A

MCP HOUSATONIC RIVER/
SILVER LAKE
(SITE NO. 1-0047)
USEPA AREA 6

MCP OXBOW AREA B
(SITE NO. 1-1055)

MCP OXBOW AREA A
(SITE NO. 1-1055)

MCP OXBOW AREA J
(SITE NO. 1-1055)

MCP OXBOW AREA K
(SITE NO. 1-1055)

MCP NEWELL STREET AREA I
(OXBOW AREA D)
(SITE NO. 1-0191)

MCP NEWELL STREET AREA II
(OXBOW AREA G)
(SITE NO. 1-1057)
USEPA AREA 5B

MCP OXBOW
AREA F
(SITE NO. 1-1055)

MCP OXBOW AREA C
(SITE NO. 1-1055)

EAST STREET

TYLER ST.

CENTRAL ST.

NEWELL STREET

SILVER LAKE CONFLUE.

Silver Lake

Housatonic River

900' 0 900'

APPROXIMATE SCALE

BLASLAND, BOUCK & LEE, INC.
ENGINEERS & SCIENTISTS

GENERAL ELECTRIC COMPANY
PITTSFIELD, MASSACHUSETTS
SAMPLING AND ANALYSIS PLAN /
DATA COLLECTION AND
ANALYSIS QUALITY ASSURANCE PLAN

SITE PLAN

FIGURE
1

02.01 REMOVAL RESPONSE - CORRESPONDENCE

Title: Memorandum to Bryan Olson, USEPA; From Kenneth Finkelstein, US Department of Commerce - National Oceanic and Atmospheric Administration
Addressee: BRYAN OLSON - ENVIRONMENTAL PROTECTION AGENCY
Authors: KENNETH FINKELSTEIN - UNITED STATES DEPARTMENT OF COMMERCE
Date: May 29, 1997
Format: LETTER No. Pgs: 3
AR No. 02.01.1 Document No. 000074

Title: Corrective Action Oversight/Sediment Sampling at General Electric Company, Pittsfield, Massachusetts; Sampling and Analysis Plan
Addressee: KATHY CASTAGNA - ENVIRONMENTAL PROTECTION AGENCY
Authors: MARK HEANEY - TECHLAW INC.
Date: September 8, 1997
Format: LETTER No. Pgs: 2
AR No. 02.01.2 Document No. 000052
*Attached to Document No. 000029 In 02.03

Title: Memorandum to Bryan Olson, USEPA; from Kenneth Finkelstein-United States Department of Commerce-National Oceanic and Atmospheric Administration
Addressee: BRYAN OLSON - ENVIRONMENTAL PROTECTION AGENCY
Authors: KENNETH FINKELSTEIN - UNITED STATES DEPARTMENT OF COMMERCE
Date: March 26, 1998
Format: LETTER No. Pgs: 2
AR No. 02.01.3 Document No. 000076

Title: General Electric - Gabion Sampling
Addressee: BRYAN OLSON - ENVIRONMENTAL PROTECTION AGENCY
Authors: JUSTIN PIMPARE - ENVIRONMENTAL PROTECTION AGENCY
Date: April 7, 1998
Format: LETTER No. Pgs: 1
AR No. 02.01.4 Document No. 000031

Title: Personal Communication with Don Wood, USACE Regarding Housatonic River
Addressee: FILE - FILE
Authors: SUSAN SVIRSKY - ENVIRONMENTAL PROTECTION AGENCY
Date: April 16, 1998
Format: MEMORANDUM No. Pgs: 1
AR No. 02.01.5 Document No. 000077

Title: Letter to Susan Svirsky and Dean Tagliaferro, from Kenneth Finkelstein, U.S. Department of Commerce, National Oceanic and Atmospheric Administration
Addressee: DEAN TAGLIAFERRO - ENVIRONMENTAL PROTECTION AGENCY
Authors: KENNETH FINKELSTEIN - ENVIRONMENTAL PROTECTION AGENCY
Date: May 11, 1998
Format: LETTER No. Pgs: 1
AR No. 02.01.6 Document No. 000079

Title: Final Reviews of Aquatic Ecology Assessment of the Housatonic River and Evaluation of the Terrestial Ecosystem of Housatonic River Valley (Task 06)
Addressee: KATHY CASTAGNA - ENVIRONMENTAL PROTECTION AGENCY
Authors: MARK HEANEY - TECHLAW INC.
Date: May 18, 1998
Format: LETTER No. Pgs: 9
AR No. 02.01.7 Document No. 000080

Title: Consideration of GE's points and comments
Addressee: DEAN TAGLIAFERRO - ENVIRONMENTAL PROTECTION AGENCY
Authors: MARY BALLEW - ENVIRONMENTAL PROTECTION AGENCY
Date: May 21, 1998
Format: LETTER No. Pgs: 1
AR No. 02.01.8 Document No. 000093

Title: RE: GE Housatonic River Site; CERCLA Unilateral Administrative Order for Upper Reach Removal Action
Addressee: JOHN DEVILLARS - ENVIRONMENTAL PROTECTION AGENCY
Authors: ANTHONY CONTE - UNITED STATES DEPARTMENT OF THE INTERIOR
Date: May 22, 1998
Format: LETTER No. Pgs: 1
AR No. 02.01.9 Document No. 000097

Title: GE Housatonic River Site - Unilateral Administrative Order for Upper Reach Removal Action
Addressee: JOHN DEVILLARS - ENVIRONMENTAL PROTECTION AGENCY
Authors: KENNETH FINKELSTEIN - UNITED STATES DEPARTMENT OF COMMERCE
Date: May 26, 1998
Format: LETTER No. Pgs: 1
AR No. 02.01.10 Document No. 000100

02.02 REMOVAL RESPONSE - REMOVAL RESPONSE REPORTS

Title: Bladder Cancer and Employment In The Pittsfield Massachusetts Area II: A Follow-Up Survey of Bladder Cancer Cases
Authors: MASS DEPARTMENT OF PUBLIC HEALTH
Date: June 1989
Format: REPORT, STUDY No. Pgs: 45
AR No. 02.02.1 Document No. 000085

Title: A Report to the General Electric Company Concerning A Case-Control Study of Cancer Mortality at the General Electric Pittsfield Facility
Addressee: GENERAL ELECTRIC CORPORATION
Authors: DAVID WEGMAN - UNIVERSITY OF LOWELL DEPT OF WORK ENVIRO
Date: January 2, 1990
Format: REPORT, STUDY No. Pgs: 170
AR No. 02.02.2 Document No. 000084

Title: Draft Technical Review Comments; Revised Work Plan for the Ecological Risk Assessment of the Housatonic River Site
Authors: ENVIRONMENTAL PROTECTION AGENCY
Date: November 16, 1990
Format: REPORT, STUDY — No. Pgs: 25
AR No. 02.02.3 — Document No. 000073

Title: Tables 8-10: Preliminary Draft; MCP Supplemental Phase II Investigation/RCRA Facility Investigation of Housatonic River and Silver Lake
Authors: BLASLAND, BOUCK, & LEE, INC.
Date: 1994
Format: REPORT, STUDY — No. Pgs: 3
AR No. 02.02.4 — Document No. 000092

Title: Aquatic Ecology Assessment of the Housatonic River, Massachusetts
Authors: CHADWICK & ASSOCIATES, INC.
Date: May 1994
Format: REPORT, STUDY — No. Pgs: 135
AR No. 02.02.5 — Document No. 000069

Title: GE Area Environmental and Facility Programs Housatonic River Flood Plain Short Term Measures: As-Built Report GE-963
Date: December 30, 1994
Format: WORK PLAN — No. Pgs: 26
AR No. 02.02.6 — Document No. 000045

Title: Housatonic River Floodplain Short-Term Measures (STMs) Site No. 1-1047
Addressee: J. LYN CUTLER - MASSACHUSETTS DEP
Authors: JOHN D. CIAMPA - GENERAL ELECTRIC CORPORATION
Date: August 18, 1995
Format: LETTER — No. Pgs: 9
AR No. 02.02.7 — Document No. 000051

Title: Occurrence of Oil at East Street Area 2/USEPA Area 4 - Fall 1995
Authors: BLASLAND, BOUCK, & LEE, INC.
Date: January 1996
Format: REPORT, STUDY No. Pgs: 46
AR No. 02.02.8 Document No. 000010
*Attached to Document No. 000009 In 11.09

Title: Supplemental Phase II/ RCRA Facility Investigation Report for Housatonic River and Silver Lake
Authors: BLASLAND, BOUCK, & LEE, INC.
Date: January 1996
Format: REPORT, STUDY No. Pgs: 365
AR No. 02.02.9 Document No. 000019

Title: MCP Phase I and Interim Phase II Report for Former Housatonic River Oxbow Areas A, B, C, J, and K (Volume I of II)
Authors: BLASLAND, BOUCK, & LEE, INC.
Date: February 1996
Format: REPORT, STUDY No. Pgs: 214
AR No. 02.02.10 Document No. 000004

Title: Proposal for Human Health Risk Assessment of the Housatonic River
Addressee: GENERAL ELECTRIC CORPORATION
Authors: CHEMRISK, A DIVISION OF MCLAREN/HART
Date: February 14, 1996
Format: REPORT, STUDY No. Pgs: 40
AR No. 02.02.11 Document No. 000081

Title: Addendum to Phase II/RFI Proposal - East Street Area 2/USEPA Area 4 - Pittsfield, MA
Authors: GOLDER ASSOCIATES
Date: May 1996
Format: REPORT, STUDY No. Pgs: 418
AR No. 02.02.12 Document No. 000008

Title: Report on the Preliminary Investigation of Corrective Measures for Housatonic River and Silver Lake Sediment
Addressee: GENERAL ELECTRIC CORPORATION
Authors: HARRINGTON ENGINEERING & CONSTRUCTION
Date: May 1996
Format: REPORT, STUDY No. Pgs: 512
AR No. 02.02.13 Document No. 000063

Title: MCP Supplemental Phase II/RCRA Facility Investigation Report for Lyman Street/USEPA Area 5A Site
Authors: BLASLAND, BOUCK, & LEE, INC.
Date: June 1996
Format: REPORT, STUDY No. Pgs: 370
AR No. 02.02.14 Document No. 000022

Title: Occurrence of Oil at East Street Area 2/USEPA Area 4 - Spring 1996
Addressee: BLASLAND, BOUCK, & LEE, INC.
Date: July 1996
Format: REPORT, STUDY No. Pgs: 46
AR No. 02.02.15 Document No. 000012
*Attached to Document No. 000011 In 11.09

Title: Housatonic River Floodplain Properties - 17-2-3 (Pomeroy Avenue) and 17-2-20 (Lowden Street)
Addressee: BRYAN OLSON - ENVIRONMENTAL PROTECTION AGENCY
Authors: ANDREW T SILFER - GENERAL ELECTRIC CORPORATION
Date: July 25, 1996
Format: LETTER No. Pgs: 15
AR No. 02.02.16 Document No. 000058

Title: Occurrence of Oil at East Street Area 2/USEPA Area 4 - Fall 1996
Authors: BLASLAND, BOUCK, & LEE, INC.
Date: February 1997
Format: REPORT, STUDY No. Pgs: 45
AR No. 02.02.17 Document No. 000014
*Attached to Document No. 000013 In 11.09

Title: IRA Status Report for RTN 1-10966
Addressee: DAVID SLOWICK - MASSACHUSETTS DEP
Authors: ANDREW T SILFER - GENERAL ELECTRIC CORPORATION
Date: February 5, 1997
Format: REPORT, STUDY No. Pgs: 25
AR No. 02.02.18 Document No. 000060

Title: Occurrence of Oil at East Street Area 2/USEPA Area 4 - Spring 1997
Authors: BLASLAND, BOUCK, & LEE, INC.
Date: August 1997
Format: REPORT, STUDY No. Pgs: 46
AR No. 02.02.19 Document No. 000016
*Attached to Document No. 000015 In 11.09

Title: Combined Field Sampling Plan and Health and Safety Plan for Housatonic River Sediment Sampling Project - Pittsfield, Massachuestts
Addressee: A.T. KEARNEY, INC. - KEARNEY/CENTAUR DIV
Authors: NORMANDEAU ASSOCIATES
Date: August 1997
Format: SAMPLING & ANALYSIS DATA No. Pgs: 137
AR No. 02.02.20 Document No. 000054
*Attached to Document No. 000029 In 02.03

Title: IRA Status Report for RTNs 1-10770 and 1-10934, DEP Site No. 1-0147
Addressee: DAVID SLOWICK - MASSACHUSETTS DEP
Authors: ANDREW T SILFER - GENERAL ELECTRIC CORPORATION
Date: August 22, 1997
Format: REPORT, STUDY No. Pgs: 9
AR No. 02.02.21 Document No. 000059

Title: MCP Supplemental Phase II Report for the Newell Street I Site
Authors: BLASLAND, BOUCK, & LEE, INC.
Date: September 1997
Format: REPORT, STUDY No. Pgs: 328
AR No. 02.02.22 Document No. 000005

Title: Information Booklet for The Final Report on the Housatonic River Area PCB Exposure Assessment and Related Health Issues
Authors: MASS DEPARTMENT OF PUBLIC HEALTH
Date: September 1997
Format: REPORT, STUDY No. Pgs: 6
AR No. 02.02.23 Document No. 000072

Title: Housatonic River Area PCB Exposure Assessment Study Final Report
Authors: MASS DEPARTMENT OF PUBLIC HEALTH
Date: September 1997
Format: REPORT, STUDY No. Pgs: 133
AR No. 02.02.24 Document No. 000094
*Attached to Document No. 000072 In 02.02

Title: Sampling and Analysis Plan for Sediment Sample Collection and Analysis General Electric Company
Authors: A.T. KEARNEY, INC. - KEARNEY/CENTAUR DIV
Date: September 8, 1997
Format: SAMPLING & ANALYSIS DATA No. Pgs: 10
AR No. 02.02.25 Document No. 000053
*Attached to Document No. 000029 In 02.03

Title: Addendum to MCP Supplemental Phase II/RCRA Facility Investigation Proposal for Lyman Street/USEPA Area 5A Site
Authors: BLASLAND, BOUCK, & LEE, INC.
Date: October 1997
Format: REPORT, STUDY No. Pgs: 115
AR No. 02.02.26 Document No. 000023

Title: Effectiveness Evaluation of Short Term Measures - Lyman Street (Oxbow Area D) - Pittsfield, Massachusetts
Authors: GOLDER ASSOCIATES
Date: October 1997
Format: REPORT, STUDY No. Pgs: 87
AR No. 02.02.27 Document No. 000024

Title: Immediate Response Completion Report Oxbow Area C
Authors: BLASLAND, BOUCK, & LEE, INC.
Date: December 1997
Format: REPORT, STUDY No. Pgs: 76
AR No. 02.02.28 Document No. 000027

Title: Occurrence of Oil at East Street Area 2/USEPA Area 4 - Fall 1997
Authors: BLASLAND, BOUCK, & LEE, INC.
Date: February 1998
Format: REPORT, STUDY No. Pgs: 42
AR No. 02.02.29 Document No. 000018
*Attached to Document No. 000017 In 11.09

Title: Report on Supplemental Characterization Activities - Building 68 Area
Authors: BLASLAND, BOUCK, & LEE, INC.
Date: February 1998
Format: REPORT, STUDY No. Pgs: 115
AR No. 02.02.30 Document No. 000026
*Attached to Document No. 000025 In 02.02

Title: "Habitat Assessment Report and Restoration; Building 68 Site, Pittsfield, MA (16.0802583.001.007)"
Addressee: ANNA SYMINGTON - ENVIRONMENTAL PROTECTION AGENCY
Authors: DEAN TAGLIAFERRO - ENVIRONMENTAL PROTECTION AGENCY
Date: February 20, 1998
Format: No. Pgs: 35
AR No. 02.02.31 Document No. 000075

Title: Report of Attorney General Scott Harsbarger Relative to Workshop Held on February 5, 1998 Regarding Health Concerns Relating to PCB Contamination
Authors: SCOTT HARSHBARGER - MASSACHUSETTS ATTORNEY GENERAL
Date: March 1998
Format: REPORT, STUDY No. Pgs: 18
AR No. 02.02.32 Document No. 000086

Title: Building 68 Area Supplemental Characterization Activities - Status Report and Proposal - EPA Region I CERCLA Docket #I-97-1003/DEP File #1-1047P
Addressee: DEAN TAGLIAFERRO - ENVIRONMENTAL PROTECTION AGENCY
Authors: ANDREW T SILFER - GENERAL ELECTRIC CORPORATION
Date: March 25, 1998
Format: LETTER No. Pgs: 22
AR No. 02.02.33 Document No. 000025

Title: Upper Reach - Housatonic River Ecological Risk Assessment - Final
Addressee: ENVIRONMENTAL PROTECTION AGENCY
Authors: ROY F. WESTON, INC.
Date: May 1998
Format: REPORT, STUDY No. Pgs: 174
AR No. 02.02.34 Document No. 000067

Title: Preliminary Report - Wetland Characterization -and Function-Value Assessment - Housatonic River from Newell Street to Woods Pond
Addressee: TECHLAW INC.
Date: May 1998
Format: REPORT, STUDY No. Pgs: 170
AR No. 02.02.35 Document No. 000083

Title: The Remediation and Restoration of the Housatonic River (Newell Street to the confluence with the West Branch), Pittsfield, MA
Authors: MARK OTIS - UNITED STATES ARMY CORP OF ENGINEERS
Date: May 6, 1998
Format: REPORT, STUDY No. Pgs: 82
AR No. 02.02.36 Document No. 000044

Title: Final Review of Work Plan for Ecological Assessment of the Housatonic River
Addressee: KATHY CASTAGNA - ENVIRONMENTAL PROTECTION AGENCY
Authors: MARK HEANEY - TECHLAW INC.
Date: May 7, 1998
Format: No. Pgs: 32
AR No. 02.02.37 Document No. 000078

Title: Evaluation of Human Health Risks from Exposure to Elevated Levels of PCBs in Housatonic River Sediment, Bank Soils and Floodplain Soils
Addressee: BRYAN OLSON - ENVIRONMENTAL PROTECTION AGENCY
Authors: MARY BALLEW, MARGARET HARVEY - ENVIRONMENTAL PROTECTION AGENCY
Date: May 14, 1998
Format: REPORT, STUDY No. Pgs: 58
AR No. 02.02.38 Document No. 000065

Title: Report of Site Visit to Housatonic River, Pittsfield, MA on April 28, 1998 (DEP Site Number 1-0147)
Addressee: FILE - FILE
Authors: MARGARET HARVEY - MASSACHUSETTS DEP
Date: May 20, 1998
Format: REPORT, STUDY No. Pgs: 25
AR No. 02.02.39 Document No. 000082

Title: Potential Wetland Impacts and Restoration Issues from Removal Activities Under Consideration for the Upper Reach of the Housatonic River
Addressee: DEAN TAGLIAFERRO - ENVIRONMENTAL PROTECTION AGENCY
Authors: SUSAN SVIRSKY - ENVIRONMENTAL PROTECTION AGENCY
Date: May 20, 1998
Format: REPORT, STUDY No. Pgs: 57
AR No. 02.02.40 Document No. 000096

02.03 REMOVAL RESPONSE - SAMPLING & ANALYSIS DATA

Title: GE/Newell Street Area II - Phase II/RFI Data and Boring Logs
Addressee: BRYAN OLSON - ENVIRONMENTAL PROTECTION AGENCY
Authors: RICHARD W GATES - GENERAL ELECTRIC - HOUSATONIC
Date: May 10, 1996
Format: SAMPLING & ANALYSIS DATA No. Pgs: 166
AR No. 02.03.1 Document No. 000030

Title: General Electric, Housatonic River Bank Sampling
Addressee: SUSAN SVIRSKY - ENVIRONMENTAL PROTECTION AGENCY
Authors: DAN GRANZ - ENVIRONMENTAL PROTECTION AGENCY
Date: March 9, 1997
Format: SAMPLING & ANALYSIS DATA No. Pgs: 1
AR No. 02.03.2 Document No. 000035
*Attached to Document No. 000034 In 02.03

Title: DEP: Pittsfield 1-1057; EPA: Area 5b - GE/Newell Street Area II - Updated PCB and Appendix IX Data
Addressee: BRYAN OLSON - ENVIRONMENTAL PROTECTION AGENCY
Authors: RICHARD W GATES - GENERAL ELECTRIC - HOUSATONIC
Date: March 12, 1997
Format: LETTER No. Pgs: 84
AR No. 02.03.3 Document No. 000006

Title: General Electric Pttsfield, MA Soil Sampling - Work/Sampling Plan
Addressee: ENVIRONMENTAL PROTECTION AGENCY
Authors: STEPHANIE CARR - ENVIRONMENTAL PROTECTION AGENCY
Date: February 1998
Format: SAMPLING & ANALYSIS DATA No. Pgs: 4
AR No. 02.03.4 Document No. 000042
*Attached to Document No. 000031 In 02.01

Title: Chain of Custody Record
Date: February 25, 1998
Format: SAMPLING & ANALYSIS DATA No. Pgs: 1
AR No. 02.03.5 Document No. 000043
*Attached to Document No. 000031 In 02.01

Title: Analysis of PCBs in Soils - General Electric
Addressee: DAN GRANZ - ENVIRONMENTAL PROTECTION AGENCY
Authors: PETER PHILBROOK - ENVIRONMENTAL PROTECTION AGENCY
Date: March 10, 1998
Format: SAMPLING & ANALYSIS DATA No. Pgs: 10
AR No. 02.03.6 Document No. 000032
*Attached to Document No. 000031 In 02.01

Title: General Electric Grain Size Analysis
Addressee: JUSTIN PIMPARE - ENVIRONMENTAL PROTECTION AGENCY
Authors: NATHAN RAINES - ENVIRONMENTAL PROTECTION AGENCY
Date: March 18, 1998
Format: LETTER No. Pgs: 1
AR No. 02.03.7 Document No. 000033
*Attached to Document No. 000031 In 02.01

Title: Analysis TOC in Soil - General Electric
Addressee: DAN GRANZ - ENVIRONMENTAL PROTECTION AGENCY
Authors: PAUL CARROLL - ENVIRONMENTAL PROTECTION AGENCY
Date: March 18, 1998
Format: SAMPLING & ANALYSIS DATA No. Pgs: 4
AR No. 02.03.8 Document No. 000041
*Attached to Document No. 000031 In 02.01

Title: Analysis of PCBs in Soil - General Electric
Addressee: SUSAN SVIRSKY - ENVIRONMENTAL PROTECTION AGENCY
Authors: PETER PHILBROOK - ENVIRONMENTAL PROTECTION AGENCY
Date: March 19, 1998
Format: SAMPLING & ANALYSIS DATA No. Pgs: 14
AR No. 02.03.9 Document No. 000036
*Attached to Document No. 000034 In 02.03

Title: General Electric PCB Testing Results
Addressee: SUSAN SVIRSKY - ENVIRONMENTAL PROTECTION AGENCY
Authors: PETER PHILBROOK - ENVIRONMENTAL PROTECTION AGENCY
Date: March 23, 1998
Format: SAMPLING & ANALYSIS DATA No. Pgs: 11
AR No. 02.03.10 Document No. 000038
*Attached to Document No. 000034 In 02.03

Title: Analysis of Polychlorinated Biphenyls (PCBs) in Water Samples - General Electric
Addressee: SUSAN SVIRSKY - ENVIRONMENTAL PROTECTION AGENCY
Authors: PETER PHILBROOK - ENVIRONMENTAL PROTECTION AGENCY
Date: March 26, 1998
Format: SAMPLING & ANALYSIS DATA No. Pgs: 13
AR No. 02.03.11 Document No. 000037
*Attached to Document No. 000034 In 02.03

Title: Removal Program Sampling Quality Assurance/Quality Control Plan For the General Electric Preliminary Assessment/Site Investigation
Addressee: ENVIRONMENTAL PROTECTION AGENCY
Authors: ROY F. WESTON, INC.
Date: April 1998
Format: SAMPLING & ANALYSIS DATA No. Pgs: 91
AR No. 02.03.12 Document No. 000040
*Attached to Document No. 000034 In 02.03

Title: Corrective Action Oversight at General Electric Company - Housatonic River Sediment Study Draft Data
Addressee: KATHY CASTAGNA - ENVIRONMENTAL PROTECTION AGENCY
Authors: MARK HEANEY - TECHLAW INC.
Date: April 6, 1998
Format: SAMPLING & ANALYSIS DATA No. Pgs: 9
AR No. 02.03.13 Document No. 000029

Title: Analysis of PCBs in Soils
Addressee: SUSAN SVIRSKY - ENVIRONMENTAL PROTECTION AGENCY
Authors: PETER PHILBROOK - ENVIRONMENTAL PROTECTION AGENCY
Date: April 6, 1998
Format: SAMPLING & ANALYSIS DATA No. Pgs: 20
AR No. 02.03.14 Document No. 000039
*Attached to Document No. 000034 In 02.03

Title: Sampling Activities
Addressee: FILE - FILE
Authors: PAUL CALLAHAN - ENVIRONMENTAL PROTECTION AGENCY
Date: April 22, 1998
Format: SAMPLING & ANALYSIS DATA No. Pgs: 41
AR No. 02.03.15 Document No. 000034

02.06 REMOVAL RESPONSE - WORK PLANS AND PROGRESS REPORTS

Title: GE-Monthly Status Reports Massachusetts Contigency Plan - EPA RCRA Corrective Action Activities - June 1996-May 1997 - Surface Water Data
Date: June 1996
Format:
No. Pgs: 16
AR No. 02.06.1
Document No. 000070

Title: Building 68 Area Removal Action Work Plan
Authors: BLASLAND, BOUCK, & LEE, INC.
Date: May 1997
Format: REPORT, STUDY
No. Pgs: 161
AR No. 02.06.2
Document No. 000003

Title: Work Plan for the Ecological Risk Assessment of the Housatonic River Site, Volume I - Work Plan Text, Tables, and Figures
Authors: CHEMRISK, A DIVISION OF MCLAREN/HART
Date: May 24, 1997
Format: REPORT, STUDY
No. Pgs: 220
AR No. 02.06.3
Document No. 000020

Title: Work Plan for the Ecological Risk Assessment of the Housatonic River Site, Volume II - Appendices A and B
Authors: CHEMRISK, A DIVISION OF MCLAREN/HART
Date: May 24, 1997
Format: REPORT, STUDY
No. Pgs: 298
AR No. 02.06.4
Document No. 000021

Title: February 1998 Monthly Status Report - GE Pttsfield MCP Activities
Addressee: BRYAN OLSON - ENVIRONMENTAL PROTECTION AGENCY
Authors: JOHN D. CIAMPA - GENERAL ELECTRIC CORPORATION
Date: March 12, 1998
Format: WORK PLAN
No. Pgs: 108
AR No. 02.06.5
Document No. 000028

Title: April 1998 Monthly Status Report - GE Pittsfield MCP Activities
Addressee: BRYAN OLSON - ENVIRONMENTAL PROTECTION AGENCY
Authors: JOHN D. CIAMPA - GENERAL ELECTRIC CORPORATION
Date: May 14, 1998
Format: WORK PLAN No. Pgs: 113
AR No. 02.06.6 Document No. 000066

02.08 REMOVAL RESPONSE - SCOPES OF WORK

Title: MCP Supplemental Phase II Scope of Work and Proposal for RCRA Facility Investigation of East Street Area 2/USEPA Area 4
Authors: BLASLAND, BOUCK, & LEE, INC.
Date: July 1995
Format: REPORT, STUDY No. Pgs: 309
AR No. 02.08.1 Document No. 000007

11.09 POTENTIALLY RESPONSIBLE PARTIES - PRP-SPECIFIC DOCUMENTS

Title: East Street Area II, Site 1-10146
Addressee: BRYAN OLSON - ENVIRONMENTAL PROTECTION AGENCY
Authors: MARK PHILLIPS - GENERAL ELECTRIC CORPORATION
Date: February 2, 1996
Format: LETTER No. Pgs: 1
AR No. 11.09.1 Document No. 000009

Title: General Electric Pittsfield Facility: East Street Area 2 Site (Mass DEP File #1-0146), USEPA Area 4
Addressee: BRYAN OLSON - ENVIRONMENTAL PROTECTION AGENCY
Authors: JOHN D. CIAMPA - GENERAL ELECTRIC CORPORATION
Date: July 30, 1996
Format: LETTER No. Pgs: 2
AR No. 11.09.2 Document No. 000011

Title: RE: Request for Information Regarding Properties That May Have Received Fill from the General Electric Facility in Pittsfield
Addressee: J. LYN CUTLER - MASSACHUSETTS DEP
Authors: RONALD DESGROSEILLIERS - GENERAL ELECTRIC CORPORATION
Date: November 27, 1996
Format: LETTER No. Pgs: 19
AR No. 11.09.3 Document No. 000091

Title: General Electric Pittsfield Facility: East Street Area 2 Site (Mass DEP File #1-0146), USEPA Area 4
Addressee: BRYAN OLSON - ENVIRONMENTAL PROTECTION AGENCY
Authors: JOHN D. CIAMPA - GENERAL ELECTRIC CORPORATION
Date: February 4, 1997
Format: LETTER No. Pgs: 2
AR No. 11.09.4 Document No. 000013

Title: General Electric Pittsfield Facility: East Street Area 2 Site (Mass DEP File #1-0146), USEPA Area 4
Addressee: BRYAN OLSON - ENVIRONMENTAL PROTECTION AGENCY
Authors: JOHN D. CIAMPA - GENERAL ELECTRIC CORPORATION
Date: August 6, 1997
Format: LETTER No. Pgs: 2
AR No. 11.09.5 Document No. 000015

Title: Removal Action - Building 68 Area - Restoration of Sediment Removal Cells 3 and 4
Addressee: DEAN TAGLIAFERRO - ENVIRONMENTAL PROTECTION AGENCY
Authors: ANDREW T SILFER - GENERAL ELECTRIC CORPORATION
Date: November 14, 1997
Format: LETTER No. Pgs: 7
AR No. 11.09.6 Document No. 000049

Title: General Electric Pittsfield Facility: East Street Area 2 Site (Mass DEP File #1-0146), USEPA Area 4
Addressee: BRYAN OLSON - ENVIRONMENTAL PROTECTION AGENCY
Authors: JOHN D. CIAMPA - GENERAL ELECTRIC - HOUSATONIC
Date: February 6, 1998
Format: LETTER No. Pgs: 2
AR No. 11.09.7 Document No. 000017

Title: Removal Action - Building 68 Area - Bank Soil Excavation
Addressee: DEAN TAGLIAFERRO - ENVIRONMENTAL PROTECTION AGENCY
Authors: ANDREW T SILFER - GENERAL ELECTRIC CORPORATION
Date: February 20, 1998
Format: LETTER No. Pgs: 4
AR No. 11.09.8 Document No. 000050

Title: General Electric Company's Pittsfield Site, Pittsfield, MA
Addressee: JOHN DEVILLARS - ENVIRONMENTAL PROTECTION AGENCY
Authors: STEPHEN RAMSEY - GENERAL ELECTRIC CORPORATION
Date: April 8, 1998
Format: LETTER No. Pgs: 3
AR No. 11.09.9 Document No. 000087

Title: Pittsfield/Housatonic River Site, Pittsfield, MA
Addressee: JOHN DEVILLARS - ENVIRONMENTAL PROTECTION AGENCY
Authors: STEPHEN RAMSEY - GENERAL ELECTRIC CORPORATION
Date: May 14, 1998
Format: LETTER No. Pgs: 3
AR No. 11.09.10 Document No. 000064

Title: Letter From Suzanne Condon, MA Bureau of Environmental Health Assessment to Stephen Ramsey, Vice President of General Electric
Addressee: STEPHEN RAMSEY - GENERAL ELECTRIC CORPORATION
Authors: SUZANNE CONDON - MASSACHUSETTS EXECUTIVE OFFICE OF HEALTH
Date: May 15, 1998
Format: LETTER No. Pgs: 3
AR No. 11.09.11 Document No. 000088

Title: EPA Notice of Potential CERCLA Liability and Invitation to Perform or Finance Cleanup Activities --GE Housatonic River Site
Addressee: JANE MAGEE - GENERAL ELECTRIC CORPORATION
Authors: PATRICIA MEANEY - ENVIRONMENTAL PROTECTION AGENCY
Date: May 22, 1998
Format: LETTER No. Pgs: 5
AR No. 11.09.12 Document No. 000095

Title: RE: General Electric/ Housatonic River Site
Addressee: STEPHEN RAMSEY - GENERAL ELECTRIC CORPORATION
Authors: JOHN DEVILLARS - ENVIRONMENTAL PROTECTION AGENCY
Date: May 22, 1998
Format: LETTER No. Pgs: 7
AR No. 11.09.13 Document No. 000099

13.02 COMMUNITY RELATIONS - COMMUNITY RELATIONS PLANS

Title: Revised Public Involvement Plan for the Housatonic River and General Electric Company Pittsfield Disposal Sites
Authors: MASSACHUSETTS DEP
Date: April 1995
Format: REPORT, STUDY No. Pgs: 128
AR No. 13.02.1 Document No. 000068

13.03 COMMUNITY RELATIONS - NEWS CLIPPINGS/PRESS RELEASES

Title: Extension of Negotiation Period with General Electric
Date: February 2, 1998
Format: FACT SHEET, PRESS RELEASE No. Pgs: 2
AR No. 13.03.1 Document No. 000046

Title: Status of Government Negotiations with General Electric for the Cleanup of PCB Contamination in Berkshire County
Date: March 31, 1998
Format: FACT SHEET, PRESS RELEASE No. Pgs: 1
AR No. 13.03.2 Document No. 000047

Title: Status of Negotiations with General Electric
Date: April 3, 1998
Format: FACT SHEET, PRESS RELEASE No. Pgs: 1
AR No. 13.03.3 Document No. 000048

17.07 SITE MANAGEMENT RECORDS - REFERENCE DOCUMENTS

Title:	Fletcher's Paint Site Milford, NH		
Addressee:	CHERYL SPRAGUE - ENVIRONMENTAL PROTECTION AGENCY		
Authors:	JILL SIEBELS - GENERAL ELECTRIC CORPORATION		
Date:	August 6, 1996		
Format:	REPORT, STUDY	No. Pgs:	31
AR No.	17.07.1	Document No.	000061

Title:	Fletcher Site Risk-Based PCB Soil Cleanup Levels for Unrestricted Land Use		
Addressee:	JILL SIEBELS - GENERAL ELECTRIC CORPORATION		
Authors:	MARK MARITATO, MIRANDA HENNING - CHEMRISK, A DIVISION OF MCLAREN/HART		
Date:	April 18, 1997		
Format:	REPORT, STUDY	No. Pgs:	6
AR No.	17.07.2	Document No.	000062

APPENDIX B

EE/CA COST ESTIMATES

ALTERNATIVE 1

GE-Pittsfield EE/CA Alt. #01
Roy F. Weston, Inc.

Designed By:
Estimated By: A. Kessler

Prepared By:

Preparation Date: 02/07/00
Effective Date of Pricing: 02/07/00

Sales Tax: 0.00%

This report is not copyrighted, but the information
contained herein is For Official Use Only.

M C A C E S F O R W I N D O W S
Software Copyright (c) 1985-1998
by Building Systems Design, Inc.
Release 1.2c

GE-Pittsfield Alternative No. 1

Wet excavation to cleanup criteria (as determined on a subreach basis and as defined in Section 3 of EE/CA report). Riverbank and riverbed restoration. This alternative involves no river diversion.

See section 5.2 of EE/CA report for written desciptions of activities.

Project Information

Escalation	0.00%
Contingency	25.00%
Engineering and Design	6.00%
USACE Construction Management	8.00%

General Contractor

Contractor Management	10.00%
Field Overhead	6.00%
Home Office Overhead	15.00%
Profit	5.00%
Bond	0.00%

SUMMARY REPORTS SUMMARY PAGE

PROJECT OWNER SUMMARY - Scope.....1
PROJECT OWNER SUMMARY - Facility.....2
PROJECT INDIRECT SUMMARY - Scope.....4
PROJECT INDIRECT SUMMARY - Facility.....5
PROJECT DIRECT SUMMARY - Scope.....7
PROJECT DIRECT SUMMARY - Facility.....8

DETAILED ESTIMATE DETAIL PAGE

10. Additional Bank Sampling.....1
20. Mobilization
    10. Mobilize Equipment.....2
    20. Setup Temporary Facilities.....3
    30. Install Temporary Fence.....4
    32. Construct Temp. Dewatering Area.....5
    34. Temporary Dewatering Area WTS.....6
    50. Erosion & Sedimentation Control.....8
    60. Clearing.....9
    70. Temporary Access Road.....10
    72. Maint. & Protection of Traffic.....11
    76. Truck Decon Facilities.....12
    90. Demobilization.....13
    92. Pavement Restoration.....14
40. Excavate & Transport Sed./Soils
    10. Excavate Bed Sediments.....15
    15. ALLOWANCE Down Time Bed Exc.....16
    20. Excavate Bank Soils.....17
    25. ALLOWANCE Down Time Bank Exc.....18
    40. O&M Truck Decon Facilities.....19
42. Dewatering of Excavated Material
    10. Manage Drying Area.....20
    20. O & M WTS.....21
46. Sampling
    20. Characterization Sampling.....23
60. Restoration of River Bed
    10. Import/Place River Bed Backfill.....24
    15. ALLOWANCE Down Time Bed Backfill.....25
62. Restoration of River Bank
    12. Import & Place Fill Material.....26
    15. ALLOWANCE Down Time Equip. Rent.....27
    20. Restoration.....28

No Backup Reports...

* * * END TABLE OF CONTENTS * * *

** PROJECT OWNER SUMMARY - Scope **

		QUANTITY	UOM	CONTRACT	ESCLATIN	CONTINGN	ENG&DES	CONST MT		TOTAL COST	UNIT COST
10	Additional Bank			577,257	0	144,314	43,294	61,189	0	826,055	
20	Mobilization			1,954,182	0	488,546	146,564	207,143	0	2,796,435	
40	Excavate & Tran			2,831,922	0	707,981	212,394	300,184	0	4,052,481	
42	Dewatering of E			814,857	0	203,714	61,114	86,375	0	1,166,060	
46	Sampling			328,766	0	82,191	24,657	34,849	0	470,464	
60	Restoration of			1,721,223	0	430,306	129,092	182,450	0	2,463,070	
62	Restoration of			5,780,315	0	1,445,079	433,524	612,713	0	8,271,631	
	GE-Pittsfield E	1.00	EA	14,008,522	0	3,502,131	1,050,639	1,484,903	0	20,046,196	20046196

** PROJECT OWNER SUMMARY - Facility **

	QUANTITY UOM	CONTRACT	ESCLATIN	CONTINGN	ENG&DES	CONST MT		TOTAL COST	UNIT COST
10 Additional Bank		577,257	0	144,314	43,294	61,189	0	826,055	
20 Mobilization									
20.10 Mobilize Equ	10.00 EA	4,224	0	1,056	317	448	0	6,044	604.43
20.20 Setup Tempor		99,469	0	24,867	7,460	10,544	0	142,340	
20.30 Install Temp	15000.00 LF	97,782	0	24,445	7,334	10,365	0	139,926	9.33
20.32 Construct Te	12.00 EA	113,753	0	28,438	8,531	12,058	0	162,780	13565.00
20.34 Temporary De		103,176	0	25,794	7,738	10,937	0	147,645	
20.50 Erosion & Se		133,806	0	33,452	10,035	14,183	0	191,476	
20.60 Clearing		106,441	0	26,610	7,983	11,283	0	152,317	
20.70 Temporary Ac		689,745	0	172,436	51,731	73,113	0	987,025	
20.72 Maint. & Pro		275,863	0	68,966	20,690	29,241	0	394,759	
20.76 Truck Decon		48,086	0	12,021	3,606	5,097	0	68,811	
20.90 Demobilizati		115,588	0	28,897	8,669	12,252	0	165,406	
20.92 Pavement Res	8000.00 SY	166,250	0	41,563	12,469	17,623	0	237,904	29.74
TOTAL Mobilization		1,954,182	0	488,546	146,564	207,143	0	2,796,435	
40 Excavate & Tran									
40.10 Excavate Bed	43200.00 CY	1,639,740	0	409,935	122,981	173,812	0	2,346,468	54.32
40.15 ALLOWANCE D		96,867	0	24,217	7,265	10,268	0	138,616	
40.20 Excavate Ban	46500.00 CY	862,099	0	215,525	64,657	91,383	0	1,233,664	26.53
40.25 ALLOWANCE Do		12,108	0	3,027	908	1,283	0	17,327	
40.40 O&M Truck De	89700.00 CY	221,108	0	55,277	16,583	23,437	0	316,405	3.53
TOTAL Excavate & T		2,831,922	0	707,981	212,394	300,184	0	4,052,481	
42 Dewatering of E									
42.10 Manage Dryin	17.00 MO	323,054	0	80,764	24,229	34,244	0	462,291	27193.58
42.20 O & M WTS	17.00 MO	491,803	0	122,951	36,885	52,131	0	703,770	41398.21
TOTAL Dewatering o		814,857	0	203,714	61,114	86,375	0	1,166,060	
46 Sampling									
46.20 Characteriza		328,766	0	82,191	24,657	34,849	0	470,464	
TOTAL Sampling		328,766	0	82,191	24,657	34,849	0	470,464	
60 Restoration of									
60.10 Import/Place		1,600,985	0	400,246	120,074	169,704	0	2,291,009	
60.15 ALLOWANCE Do		120,239	0	30,060	9,018	12,745	0	172,061	

** PROJECT OWNER SUMMARY - Facility **

	QUANTITY	UOM	CONTRACT	ESCLATIN	CONTINGN	ENG&DES	CONST MT		TOTAL COST	UNIT COST
TOTAL Restoration			1,721,223	0	430,306	129,092	182,450	0	2,463,070	
62 Restoration of										
62.12 Import & Pla			1,139,852	0	284,963	85,489	120,824	0	1,631,128	
62.15 ALLOWANCE Do			18,374	0	4,593	1,378	1,948	0	26,293	
62.20 Restoration			4,622,089	0	1,155,522	346,657	489,941	0	6,614,210	
TOTAL Restoration			5,780,315	0	1,445,079	433,524	612,713	0	8,271,631	
TOTAL GE-Pittsfiel	1.00	EA	14,008,522	0	3,502,131	1,050,639	1,484,903	0	20,046,196	20046196

** PROJECT INDIRECT SUMMARY - Scope **

	QUANTITY	UOM	DIRECT	Contr MT	Field OH	Home OH	Profit	Bond	TOTAL COST	UNIT COST
10 Additional Bank			410,000	41,000	27,060	71,709	27,488	0	577,257	
20 Mobilization			1,387,968	138,797	91,606	242,756	93,056	0	1,954,182	
40 Excavate & Tran			2,011,387	201,139	132,752	351,792	134,853	0	2,831,922	
42 Dewatering of E			578,756	57,876	38,198	101,224	38,803	0	814,857	
46 Sampling			233,508	23,351	15,411	40,840	15,656	0	328,766	
60 Restoration of			1,222,507	122,251	80,685	213,817	81,963	0	1,721,223	
62 Restoration of			4,105,498	410,550	270,963	718,052	275,253	0	5,780,315	
GE-Pittsfield E	1.00	EA	9,949,623	994,962	656,675	1,740,189	667,072	0	14,008,522	14008522

Contingency	3,502,131
SUBTOTAL	17,510,653
Engineering and Design	1,050,639
SUBTOTAL	18,561,292
USACE Construction Management	1,484,903
TOTAL INCL OWNER COSTS	20,046,196

** PROJECT INDIRECT SUMMARY - Facility **

	QUANTITY UOM	DIRECT	Contr MT	Field OH	Home OH	Profit	Bond	TOTAL COST	UNIT COST
10 Additional Bank		410,000	41,000	27,060	71,709	27,488	0	577,257	
20 Mobilization									
20.10 Mobilize Equ	10.00 EA	3,000	300	198	525	201	0	4,224	422.38
20.20 Setup Tempor		70,648	7,065	4,663	12,356	4,737	0	99,469	
20.30 Install Temp	15000.00 LF	69,450	6,945	4,584	12,147	4,656	0	97,782	6.52
20.32 Construct Te	12.00 EA	80,793	8,079	5,332	14,131	5,417	0	113,753	9479.38
20.34 Temporary De		73,282	7,328	4,837	12,817	4,913	0	103,176	
20.50 Erosion & Se		95,036	9,504	6,272	16,622	6,372	0	133,806	
20.60 Clearing		75,600	7,560	4,990	13,222	5,069	0	106,441	
20.70 Temporary Ac		489,895	48,990	32,333	85,683	32,845	0	689,745	
20.72 Maint. & Pro		195,933	19,593	12,932	34,269	13,136	0	275,863	
20.76 Truck Decon		34,153	3,415	2,254	5,973	2,290	0	48,086	
20.90 Demobilizati		82,097	8,210	5,418	14,359	5,504	0	115,588	
20.92 Pavement Res	8000.00 SY	118,080	11,808	7,793	20,652	7,917	0	166,250	20.78
TOTAL Mobilization		1,387,968	138,797	91,606	242,756	93,056	0	1,954,182	
40 Excavate & Tran									
40.10 Excavate Bed	43200.00 CY	1,164,634	116,463	76,866	203,694	78,083	0	1,639,740	37.96
40.15 ALLOWANCE D		68,800	6,880	4,541	12,033	4,613	0	96,867	
40.20 Excavate Ban	46500.00 CY	612,310	61,231	40,412	107,093	41,052	0	862,099	18.54
40.25 ALLOWANCE Do		8,600	860	568	1,504	577	0	12,108	
40.40 O&M Truck De	89700.00 CY	157,043	15,704	10,365	27,467	10,529	0	221,108	2.46
TOTAL Excavate & T		2,011,387	201,139	132,752	351,792	134,853	0	2,831,922	
42 Dewatering of E									
42.10 Manage Dryin	17.00 MO	229,451	22,945	15,144	40,131	15,384	0	323,054	19003.20
42.20 O & M WTS	17.00 MO	349,305	34,931	23,054	61,093	23,419	0	491,803	28929.57
TOTAL Dewatering o		578,756	57,876	38,198	101,224	38,803	0	814,857	
46 Sampling									
46.20 Characteriza		233,508	23,351	15,411	40,840	15,656	0	328,766	
TOTAL Sampling		233,508	23,351	15,411	40,840	15,656	0	328,766	
60 Restoration of									
60.10 Import/Place		1,137,107	113,711	75,049	198,880	76,237	0	1,600,985	
60.15 ALLOWANCE Do		85,400	8,540	5,636	14,936	5,726	0	120,239	

** PROJECT INDIRECT SUMMARY - Facility **

	QUANTITY UOM	DIRECT	Contr MT	Field OH	Home OH	Profit	Bond	TOTAL COST	UNIT COST
TOTAL Restoration		1,222,507	122,251	80,685	213,817	81,963	0	1,721,223	
62 Restoration of									
62.12 Import & Pla		809,586	80,959	53,433	141,597	54,279	0	1,139,852	
62.15 ALLOWANCE Do		13,050	1,305	861	2,282	875	0	18,374	
62.20 Restoration		3,282,862	328,286	216,669	574,173	220,099	0	4,622,089	
TOTAL Restoration		4,105,498	410,550	270,963	718,052	275,253	0	5,780,315	
TOTAL GE-Pittsfiel	1.00 EA	9,949,623	994,962	656,675	1,740,189	667,072	0	14,008,522	14008522
Contingency								3,502,131	
SUBTOTAL								17,510,653	
Engineering and Design								1,050,639	
SUBTOTAL								18,561,292	
USACE Construction Management								1,484,903	
TOTAL INCL OWNER COSTS								20,046,196	

** PROJECT DIRECT SUMMARY - Scope **

		QUANTITY	UOM	MANHRS	LABOR	EQUIPMNT	MATERIAL	SUBCONT	TOTAL COST	UNIT COST
10	Additional Bank Sampling			0	0	0	0	410,000	410,000	
20	Mobilization			0	316,453	79,163	164,293	828,060	1,387,968	
40	Excavate & Transport Sed./Soils			0	632,787	439,700	104,000	834,900	2,011,387	
42	Dewatering of Excavated Material			0	302,299	62,050	152,740	61,667	578,756	
46	Sampling			0	0	0	0	233,508	233,508	
60	Restoration of River Bed			0	247,516	362,950	612,042	0	1,222,507	
62	Restoration of River Bank			0	247,516	244,650	889,413	2723919	4,105,498	
TOTAL	GE-Pittsfield EE/CA Alt. #01	1.00	EA	0	1746571	1188513	1922487	5092053	9,949,623	9949623
	Contractor Management								994,962	
	SUBTOTAL								10,944,586	
	Field Overhead								656,675	
	SUBTOTAL								11,601,261	
	Home Office Overhead								1,740,189	
	SUBTOTAL								13,341,450	
	Profit								667,072	
	TOTAL INCL INDIRECTS								14,008,522	
	Contingency								3,502,131	
	SUBTOTAL								17,510,653	
	Engineering and Design								1,050,639	
	SUBTOTAL								18,561,292	
	USACE Construction Management								1,484,903	
	TOTAL INCL OWNER COSTS								20,046,196	

** PROJECT DIRECT SUMMARY - Facility **

	QUANTITY	UOM	MANHRS	LABOR	EQUIPMNT	MATERIAL	SUBCONT	TOTAL COST	UNIT COST
10 Additional Bank Sampling			0	0	0	0	410,000	410,000	
20 Mobilization									
20.10 Mobilize Equipment	10.00	EA	0	0	0	0	3,000	3,000	300.00
20.20 Setup Temporary Facilities			0	21,498	17,750	6,900	24,500	70,648	
20.30 Install Temporary Fence	15000.00	LF	0	0	0	0	69,450	69,450	4.63
20.32 Construct Temp. Dewatering Area	12.00	EA	0	38,079	24,100	18,614	0	80,793	6732.78
20.34 Temporary Dewatering Area WTS			0	6,786	2,788	63,708	0	73,282	
20.50 Erosion & Sedimentation Control			0	30,774	10,800	25,713	27,750	95,036	
20.60 Clearing			0	0	0	0	75,600	75,600	
20.70 Temporary Access Road			0	0	0	0	489,895	489,895	
20.72 Maint. & Protection of Traffic			0	165,933	0	30,000	0	195,933	
20.76 Truck Decon Facilities			0	10,385	1,425	8,058	14,285	34,153	
20.90 Demobilization			0	42,997	22,300	11,300	5,500	82,097	
20.92 Pavement Restoration	8000.00	SY	0	0	0	0	118,080	118,080	14.76
TOTAL Mobilization			0	316,453	79,163	164,293	828,060	1,387,968	
40 Excavate & Transport Sed./Soils									
40.10 Excavate Bed Sediments	43200.00	CY	0	319,634	230,100	57,200	557,700	1,164,634	26.96
40.15 ALLOWANCE Down Time Bed Exc.			0	0	68,800	0	0	68,800	
40.20 Excavate Bank Soils	46500.00	CY	0	172,110	132,200	30,800	277,200	612,310	13.17
40.25 ALLOWANCE Down Time Bank Exc.			0	0	8,600	0	0	8,600	
40.40 O&M Truck Decon Facilities	89700.00	CY	0	141,043	0	16,000	0	157,043	1.75
TOTAL Excavate & Transport Sed./Soils			0	632,787	439,700	104,000	834,900	2,011,387	
42 Dewatering of Excavated Material									
42.10 Manage Drying Area	17.00	MO	0	158,051	62,050	9,350	0	229,451	13497.12
42.20 O & M WTS	17.00	MO	0	144,248	0	143,390	61,667	349,305	20547.37
TOTAL Dewatering of Excavated Material			0	302,299	62,050	152,740	61,667	578,756	
46 Sampling									
46.20 Characterization Sampling			0	0	0	0	233,508	233,508	
TOTAL Sampling			0	0	0	0	233,508	233,508	
60 Restoration of River Bed									
60.10 Import/Place River Bed Backfill			0	247,516	277,550	612,042	0	1,137,107	
60.15 ALLOWANCE Down Time Bed Backfill			0	0	85,400	0	0	85,400	

	QUANTITY	UOM	MANHRS	LABOR	EQUIPMNT	MATERIAL	SUBCONT	TOTAL COST	UNIT COST
TOTAL Restoration of River Bed			0	247,516	362,950	612,042	0	1,222,507	
62 Restoration of River Bank									
62.12 Import & Place Fill Material			0	133,278	182,700	493,608	0	809,586	
62.15 ALLOWANCE Down Time Equip. Rent.			0	0	13,050	0	0	13,050	
62.20 Restoration			0	114,238	48,900	395,805	2723919	3,282,862	
TOTAL Restoration of River Bank			0	247,516	244,650	889,413	2723919	4,105,498	
TOTAL GE-Pittsfield EE/CA Alt. #01	1.00	EA	0	1746571	1188513	1922487	5092053	9,949,623	9949623
Contractor Management								994,962	
SUBTOTAL								10,944,586	
Field Overhead								656,675	
SUBTOTAL								11,601,261	
Home Office Overhead								1,740,189	
SUBTOTAL								13,341,450	
Profit								667,072	
TOTAL INCL INDIRECTS								14,008,522	
Contingency								3,502,131	
SUBTOTAL								17,510,653	
Engineering and Design								1,050,639	
SUBTOTAL								18,561,292	
USACE Construction Management								1,484,903	
TOTAL INCL OWNER COSTS								20,046,196	

10. Additional Bank Sampling

	QUANTY	UOM	MANHRS	LABOR	EQUIPMNT	MATERIAL	SUBCONT	TOTAL COST	UNIT COST
10. Additional Bank Sampling									
USR GC Additional Bank Sampling @ Depth			0.00	0.00	0.00	0.00	60000	60000.00	
	1.00	LS	0	0	0	0	60,000	60,000	60000.00
USR GC Appendix IX Sampling @ Depth			0.00	0.00	0.00	0.00	100000	100000.00	
	1.00	LS	0	0	0	0	100,000	100,000	100000.00
USR GC Detailed Survey of River			0.00	0.00	0.00	0.00	100000	100000.00	
	1.00	LS	0	0	0	0	100,000	100,000	100000.00
USR GC Geotech Investigation & Analysis			0.00	0.00	0.00	0.00	150000	150000.00	
	1.00	LS	0	0	0	0	150,000	150,000	150000.00
TOTAL Additional Bank Sampling			0	0	0	0	410,000	410,000	

20.10. Mobilize Equipment	QUANTY	UOM	MANHRS	LABOR	EQUIPMNT	MATERIAL	SUBCONT	TOTAL COST	UNIT COST
20. Mobilization									
20.10. Mobilize Equipment									
Mobilize equipment									
Excavator 2									
Front End Loader 1									
Dozer 2									
Compactor 2									
Trencher 2									
Truck Crane 1									
TOTAL Mobilize Equipment	10.00	EA	0	0	0	0	3,000	3,000	300.00

20.20. Setup Temporary Facilities	QUANTY	UOM	MANHRS	LABOR	EQUIPMNT	MATERIAL	SUBCONT	TOTAL COST	UNIT COST
20.20. Setup Temporary Facilities									
Setup Temporary Facilities includes setup of trailers, installation of temporary utilities, install construction entrance, etc.									
USR GC Excavator (monthly)			0.00	0.00	7500.00	0.00	0.00	7500.00	
	1.00	MO	0	0	7,500	0	0	7,500	7500.00
USR GC Front End Loader (monthly)			0.00	0.00	3650.00	0.00	0.00	3650.00	
	1.00	MO	0	0	3,650	0	0	3,650	3650.00
USR GC Office Trailer Rental			0.00	0.00	300.00	0.00	0.00	300.00	
	22.00	MO	0	0	6,600	0	0	6,600	300.00
USR GC Operator			0.00	30.52	0.00	0.00	0.00	30.52	
	352.00	HR	0	10,743	0	0	0	10,743	30.52
USR GC Laborer			0.00	23.57	0.00	0.00	0.00	23.57	
	352.00	HR	0	8,297	0	0	0	8,297	23.57
USR GC Electrician			0.00	30.62	0.00	0.00	0.00	30.62	
	40.00	HR	0	1,225	0	0	0	1,225	30.62
USR GC Pipefitter			0.00	30.85	0.00	0.00	0.00	30.85	
	40.00	HR	0	1,234	0	0	0	1,234	30.85
USR GC Misc. Daily Materials			0.00	0.00	0.00	200.00	0.00	200.00	
	22.00	DA	0	0	0	4,400	0	4,400	200.00
USR GC Misc. Electrical Materials			0.00	0.00	0.00	2500.00	0.00	2500.00	
	1.00	LS	0	0	0	2,500	0	2,500	2500.00
USR GC Misc. Plumbing Materials			0.00	0.00	0.00	0.00	2500.00	2500.00	
	1.00	LS	0	0	0	0	2,500	2,500	2500.00
USR GC Office Trailer Utilities			0.00	0.00	0.00	0.00	1000.00	1000.00	
	22.00	MO	0	0	0	0	22,000	22,000	1000.00
TOTAL Setup Temporary Facilities			0	21,498	17,750	6,900	24,500	70,648	

20.30. Install Temporary Fence	QUANTY	UOM	MANHRS	LABOR	EQUIPMNT	MATERIAL	SUBCONT	TOTAL COST	UNIT COST
20.30. Install Temporary Fence									
USR GC Temporary fence			0.00	0.00	0.00	0.00	3.38	3.38	
MEANS Site Work and Landscape	15000	LF	0	0	0	0	50,700	50,700	3.38
Cost Data 1999									
Temporary fence page 118									
USR GC Remove wood fence			0.00	0.00	0.00	0.00	1.25	1.25	
MEANS Site Work and Landscape	15000	LF	0	0	0	0	18,750	18,750	1.25
Cost Data 1999									
Remove wood fence pg 29									
TOTAL Install Temporary Fence	15000	LF	0	0	0	0	69,450	69,450	4.63

20.32. Construct Temp. Dewatering Area	QUANTY	UOM	MANHRS	LABOR	EQUIPMNT	MATERIAL	SUBCONT	TOTAL COST	UNIT COST
20.32. Construct Temp. Dewatering Area Assume 12 areas 40'x 40' each with earthen berms, lined with PVC liner, layer of geotextile, layer of sand and layer of stone, precast concrete inlet for use as sump.									
USR GC Front End Loader (monthly)			0.00	0.00	3650.00	0.00	0.00	3650.00	
	2.00	MO	0	0	7,300	0	0	7,300	3650.00
USR GC Dozer (monthly)			0.00	0.00	4500.00	0.00	0.00	4500.00	
	2.00	MO	0	0	9,000	0	0	9,000	4500.00
USR GC Compactor (monthly)			0.00	0.00	3900.00	0.00	0.00	3900.00	
	2.00	MO	0	0	7,800	0	0	7,800	3900.00
USR GC Inlet Grate			0.00	0.00	0.00	214.00	0.00	214.00	
	12.00	EA	0	0	0	2,568	0	2,568	214.00
USR GC Operator			0.00	30.52	0.00	0.00	0.00	30.52	
	704.00	HR	0	21,486	0	0	0	21,486	30.52
USR GC Laborer			0.00	23.57	0.00	0.00	0.00	23.57	
	704.00	HR	0	16,593	0	0	0	16,593	23.57
USR GC 30 mil PVC Liner			0.00	0.00	0.00	0.60	0.00	0.60	
	4300.00	SY	0	0	0	2,580	0	2,580	0.60
USR GC Concrete Inlet 4'dia. 4' deep			0.00	0.00	0.00	315.00	0.00	315.00	
	12.00	EA	0	0	0	3,780	0	3,780	315.00
USR GC Concrete Inlet Cover			0.00	0.00	0.00	148.00	0.00	148.00	
	12.00	EA	0	0	0	1,776	0	1,776	148.00
USR GC Sand			0.00	0.00	0.00	7.50	0.00	7.50	
	240.00	CY	0	0	0	1,800	0	1,800	7.50
USR GC Fill Material			0.00	0.00	0.00	5.00	0.00	5.00	
	430.00	CY	0	0	0	2,150	0	2,150	5.00
USR GC 3/4" Gravel			0.00	0.00	0.00	16.50	0.00	16.50	
	240.00	CY	0	0	0	3,960	0	3,960	16.50
TOTAL Construct Temp. Dewatering Area	12.00	EA	0	38,079	24,100	18,614	0	80,793	6732.78

20.34. Temporary Dewatering Area WTS	QUANTY	UOM	MANHRS	LABOR	EQUIPMNT	MATERIAL	SUBCONT	TOTAL COST	UNIT COST
20.34. Temporary Dewatering Area WTS									
Temporary dewatering area water treatment system.									
Assume treat 100 gpm using (1) modular tank, (4) bag filters, (1) dual bed carbon unit, one submersible pump and one effluent pump and PVC pipe and flexible hose.									
Assume discharge returns water into river.									
USR GC Front End Loader (monthly)			0.00	0.00	3650.00	0.00	0.00	3650.00	
	0.25	MO	0	0	913	0	0	913	3650.00
USR GC Excavator (monthly)			0.00	0.00	7500.00	0.00	0.00	7500.00	
	0.25	MO	0	0	1,875	0	0	1,875	7500.00
USR GC Carbon Units 100 gpm			0.00	0.00	0.00	13217.00	0.00	13217.00	
	1.00	EA	0	0	0	13,217	0	13,217	13217.00
USR GC Bag Filters			0.00	0.00	0.00	919.00	0.00	919.00	
	4.00	EA	0	0	0	3,676	0	3,676	919.00
USR GC ALLOWANCE PVC Pipe			0.00	0.00	0.00	1000.00	0.00	1000.00	
	1.00	LS	0	0	0	1,000	0	1,000	1000.00
USR GC ALLOWANCE Hose			0.00	0.00	0.00	1000.00	0.00	1000.00	
	1.00	LS	0	0	0	1,000	0	1,000	1000.00
USR GC Misc. Daily Materials			0.00	0.00	0.00	200.00	0.00	200.00	
	5.00	DA	0	0	0	1,000	0	1,000	200.00
USR GC Misc. Electrical Materials			0.00	0.00	0.00	7500.00	0.00	7500.00	
	1.00	LS	0	0	0	7,500	0	7,500	7500.00
USR GC Misc. Plumbing Materials			0.00	0.00	0.00	7500.00	0.00	7500.00	
	1.00	LS	0	0	0	7,500	0	7,500	7500.00
USR GC Modular Tank			0.00	0.00	0.00	28815.00	0.00	28815.00	
	1.00	EA	0	0	0	28,815	0	28,815	28815.00
USR GC Electrician			0.00	30.62	0.00	0.00	0.00	30.62	
	40.00	HR	0	1,225	0	0	0	1,225	30.62
USR GC Pipefitter			0.00	30.85	0.00	0.00	0.00	30.85	
	40.00	HR	0	1,234	0	0	0	1,234	30.85
USR GC Laborer			0.00	23.57	0.00	0.00	0.00	23.57	
	80.00	HR	0	1,886	0	0	0	1,886	23.57
USR GC Operator			0.00	30.52	0.00	0.00	0.00	30.52	
	80.00	HR	0	2,442	0	0	0	2,442	30.52

20.34. Temporary Dewatering Area WTS	QUANTY	UOM	MANHRS	LABOR	EQUIPMNT	MATERIAL	SUBCONT	TOTAL COST	UNIT COST
TOTAL Temporary Dewatering Area WTS			0	6,786	2,788	63,708	0	73,282	

20.50. Erosion & Sedimentation Control	QUANTY	UOM	MANHRS	LABOR	EQUIPMNT	MATERIAL	SUBCONT	TOTAL COST	UNIT COST
20.50. Erosion & Sedimentation Control									
20.50.10. Install Silt Fence									
MEANS Site Work and Landscape Cost Data 1999									
Silt Fence Installation pg 58 and Excavating, Utility Trench pg 52									
Trenching $0.54/lf									
Install silt fence $0.88/lf									
Backfill trench $0.43/lf									
TOTAL $1.85/lf									
TOTAL Install Silt Fence	15000	LF	0	0	0	0	27,750	27,750	1.85
20.50.30. Turbidity Barrier									
Assume barriers placed across river every 100 lf, for entire EE/CA length.									
7500 lf / 1/100lf = 75 barriers x 50 ft/barrier = 3750 lf									
USR GC Truck Crane			0.00	0.00	5400.00	0.00	0.00	5400.00	
	2.00	MO	0	0	10,800	0	0	10,800	5400.00
USR GC Misc. Daily Materials			0.00	0.00	0.00	200.00	0.00	200.00	
	38.00	DA	0	0	0	7,600	0	7,600	200.00
USR GC Turbidity Barrier			0.00	0.00	0.00	4.83	0.00	4.83	
	3750.00	LF	0	0	0	18,113	0	18,113	4.83
USR GC Laborer			0.00	23.57	0.00	0.00	0.00	23.57	
	912.00	HR	0	21,496	0	0	0	21,496	23.57
USR GC Operator			0.00	30.52	0.00	0.00	0.00	30.52	
	304.00	HR	0	9,278	0	0	0	9,278	30.52
TOTAL Turbidity Barrier	3750.00	LF	0	30,774	10,800	25,713	0	67,286	17.94
TOTAL Erosion & Sedimentation Control			0	30,774	10,800	25,713	27,750	95,036	

20.60. Clearing	QUANTY	UOM	MANHRS	LABOR	EQUIPMNT	MATERIAL	SUBCONT	TOTAL COST	UNIT COST
20.60. Clearing									
20.60.10. Clearing									
MEANS Site Work and Landscape Cost Data 1999									
Cut & Chip medium, trees to 12" dia. pg 39									
TOTAL Clearing	14.00	AC	0	0	0	0	75,600	75,600	5400.00
TOTAL Clearing			0	0	0	0	75,600	75,600	

20.70. Temporary Access Road	QUANTY	UOM	MANHRS	LABOR	EQUIPMNT	MATERIAL	SUBCONT	TOTAL COST	UNIT COST
20.70. Temporary Access Road									
20.70.10. Construct Temporary Access Road									
MEANS Site Work and Landscape Cost Data 1999									
Roads, gravel fill, no surfacing, 8" depth, pg 15									
Geotextile included in unit price, pg 57									
Temporary Road $5.60 /sy									
Geotextile $1.43 /sy									
Total $7.03 /sy									
TOTAL Construct Temporary Access Road	21700	SY	0	0	0	0	152,551	152,551	7.03
20.70.20. Remove Temporary Access Road									
MEANS Site Work and Landscape Cost Data 1999									
Pavement removal, bituminuous roads, 3" thick, pg 30									
Assume remove during excavation activities.									
TOTAL Remove Temporary Access Road	21700	SY	0	0	0	0	82,894	82,894	3.82
20.70.30. T & D of Access Road Materials									
Access road assumed to be 8" thick and cover 21700 sy									
((21700 sy x 9 sf/sy x 0.67 ft) / 27 cf/cy) x 1.5 tn/cy = 7270 tn									
Assume able to dispose of material as landfill cover.									
Material loaded during removal activity.									
USR GC Trans Landfill Cover			0.00	0.00	0.00	0.00	20.00	20.00	
	7270.00	TN	0	0	0	0	145,400	145,400	20.00
USR GC Disposal Landfill Cover			0.00	0.00	0.00	0.00	15.00	15.00	
	7270.00	TN	0	0	0	0	109,050	109,050	15.00
TOTAL T & D of Access Road Materials			0	0	0	0	254,450	254,450	
TOTAL Temporary Access Road			0	0	0	0	489,895	489,895	

20.72. Maint. & Protection of Traffic	QUANTY	UOM	MANHRS	LABOR	EQUIPMNT	MATERIAL	SUBCONT	TOTAL COST	UNIT COST
20.72. Maint. & Protection of Traffic									
Assume maintenance and protection of traffic full time during excavation and backfill activities, two flagmen full time.									
USR GC Laborer			0.00	23.57	0.00	0.00	0.00	23.57	
	7040.00	HR	0	165,933	0	0	0	165,933	23.57
USR GC Misc. Signage			0.00	0.00	0.00	300.00	0.00	300.00	
	100.00	EA	0	0	0	30,000	0	30,000	300.00
TOTAL Maint. & Protection of Traffic			0	165,933	0	30,000	0	195,933	

20.76. Truck Decon Facilities	QUANTY	UOM	MANHRS	LABOR	EQUIPMNT	MATERIAL	SUBCONT	TOTAL COST	UNIT COST
20.76. Truck Decon Facilities									
Truck decon facilities includes construction of pads.									
Assume decon pads constructed of asphalt with precast concrete inlets used									
as sumps.									
20.76.10. Construct Truck Decon Pads									
USR GC Backhoe			0.00	0.00	2850.00	0.00	0.00	2850.00	
	0.50	MO	0	0	1,425	0	0	1,425	2850.00
USR GC Laborer			0.00	23.57	0.00	0.00	0.00	23.57	
	192.00	HR	0	4,525	0	0	0	4,525	23.57
USR GC Operator			0.00	30.52	0.00	0.00	0.00	30.52	
	192.00	HR	0	5,860	0	0	0	5,860	30.52
USR GC Concrete Inlet 4' dia. x 4' deep			0.00	0.00	0.00	315.00	0.00	315.00	
	6.00	EA	0	0	0	1,890	0	1,890	315.00
USR GC Concrete Inlet Cover			0.00	0.00	0.00	148.00	0.00	148.00	
	6.00	EA	0	0	0	888	0	888	148.00
USR GC PVC Liner			0.00	0.00	0.00	0.60	0.00	0.60	
	800.00	SY	0	0	0	480	0	480	0.60
USR GC 1000 gal HDPE Tank			0.00	0.00	0.00	800.00	0.00	800.00	
	6.00	EA	0	0	0	4,800	0	4,800	800.00
USR GC Asphalt Pads			0.00	0.00	0.00	0.00	14.76	14.76	
	800.00	SY	0	0	0	0	11,808	11,808	14.76
USR GC Asphalt Curbing			0.00	0.00	0.00	0.00	2.58	2.58	
MEANS Site and Landscape Cost	960.00	LF	0	0	0	0	2,477	2,477	2.58
Data 1999, pg 74									
			0	10,385	1,425	8,058	14,285	34,153	5692.18
TOTAL Construct Truck Decon Pads	6.00	EA							
TOTAL Truck Decon Facilities			0	10,385	1,425	8,058	14,285	34,153	

20.90. Demobilization	QUANTY	UOM	MANHRS	LABOR	EQUIPMNT	MATERIAL	SUBCONT	TOTAL COST	UNIT COST
20.90. Demobilization									
TOTAL Demobilize Equipment	10.00	EA	0	0	0	0	3,000	3,000	300.00
20.90.20. Teardown Temporary Facilities									
Teardown Temporary Facilities include removal of trailers, removal of temporary utilites, removal of construction entrance, etc.									
USR GC Excavator (monthly)			0.00	0.00	7500.00	0.00	0.00	7500.00	
	2.00	MO	0	0	15,000	0	0	15,000	7500.00
USR GC Front End Loader (monthly)			0.00	0.00	3650.00	0.00	0.00	3650.00	
	2.00	MO	0	0	7,300	0	0	7,300	3650.00
USR GC Operator			0.00	30.52	0.00	0.00	0.00	30.52	
	704.00	HR	0	21,486	0	0	0	21,486	30.52
USR GC Laborer			0.00	23.57	0.00	0.00	0.00	23.57	
	704.00	HR	0	16,593	0	0	0	16,593	23.57
USR GC Electrician			0.00	30.62	0.00	0.00	0.00	30.62	
	80.00	HR	0	2,450	0	0	0	2,450	30.62
USR GC Pipefitter			0.00	30.85	0.00	0.00	0.00	30.85	
	80.00	HR	0	2,468	0	0	0	2,468	30.85
USR GC Misc. Daily Materials			0.00	0.00	0.00	200.00	0.00	200.00	
	44.00	DA	0	0	0	8,800	0	8,800	200.00
USR GC Misc. Electrical Materials			0.00	0.00	0.00	2500.00	0.00	2500.00	
	1.00	LS	0	0	0	2,500	0	2,500	2500.00
USR GC Misc. Plumbing Materials			0.00	0.00	0.00	0.00	2500.00	2500.00	
	1.00	LS	0	0	0	0	2,500	2,500	2500.00
TOTAL Teardown Temporary Facilities			0	42,997	22,300	11,300	2,500	79,097	
TOTAL Demobilization			0	42,997	22,300	11,300	5,500	82,097	

20.92. Pavement Restoration	QUANTY	UOM	MANHRS	LABOR	EQUIPMNT	MATERIAL	SUBCONT	TOTAL COST	UNIT COST
20.92. Pavement Restoration									
MEANS Site Work and Landscape Cost Data 1999, pg 71									
TOTAL Pavement Restoration	8000.00	SY	0	0	0	0	118,080	118,080	14.76
TOTAL Mobilization			0	316,453	79,163	164,293	828,060	1,387,968	

40. Excavate & Transport Sed./Soils

40.10. Excavate Bed Sediments

Estimated duration to excavate 43,200 cy based on 150 cy per day = 13.0 months.

40.10. Excavate Bed Sediments	QUANTY	UOM	MANHRS	LABOR	EQUIPMNT	MATERIAL	SUBCONT	TOTAL COST	UNIT COST
USR GC Excavator (monthly)			0.00	0.00	7500.00	0.00	0.00	7500.00	
	13.00	MO	0	0	97,500	0	0	97,500	7500.00
USR GC Dump Truck (2)			0.00	0.00	0.00	0.00	75.00	75.00	
	4576.00	HR	0	0	0	0	343,200	343,200	75.00
USR GC Excavator, Long Reach (monthly)			0.00	0.00	10200.00	0.00	0.00	10200.00	
	13.00	MO	0	0	132,600	0	0	132,600	10200.00
USR GC Operator			0.00	30.52	0.00	0.00	0.00	30.52	
	4576.00	HR	0	139,660	0	0	0	139,660	30.52
USR GC Laborer			0.00	23.57	0.00	0.00	0.00	23.57	
	4576.00	HR	0	107,856	0	0	0	107,856	23.57
USR GC Foreman			0.00	31.52	0.00	0.00	0.00	31.52	
	2288.00	HR	0	72,118	0	0	0	72,118	31.52
USR GC Misc. Daily Materials			0.00	0.00	0.00	200.00	0.00	200.00	
	286.00	DA	0	0	0	57,200	0	57,200	200.00
USR GC Roll-Off Truck w/ Sludge Box (1)			0.00	0.00	0.00	0.00	750.00	750.00	
	286.00	DA	0	0	0	0	214,500	214,500	750.00
TOTAL Excavate Bed Sediments	43200	CY	0	319,634	230,100	57,200	557,700	1,164,634	26.96

40.15. ALLOWANCE Down Time Bed Exc.	QUANTY	UOM	MANHRS	LABOR	EQUIPMNT	MATERIAL	SUBCONT	TOTAL COST	UNIT COST
40.15. ALLOWANCE Down Time Bed Exc.									
Assume down time 13.5 months x 30% = 4 months.									
USR GC Excavator (monthly)			0.00	0.00	7000.00	0.00	0.00	7000.00	
	4.00	MO	0	0	28,000	0	0	28,000	7000.00
USR GC Excavator, Long Reach (monthly)			0.00	0.00	10200.00	0.00	0.00	10200.00	
	4.00	MO	0	0	40,800	0	0	40,800	10200.00
TOTAL ALLOWANCE Down Time Bed Exc.			0	0	68,800	0	0	68,800	

40.20. Excavate Bank Soils	QUANTY	UOM	MANHRS	LABOR	EQUIPMNT	MATERIAL	SUBCONT	TOTAL COST	UNIT COST
40.20. Excavate Bank Soils									
Estimated duration to excavate 46,500 cy based on 300 cy per day = 7 months.									
Includes removal of concrete and misc. structures along river bank.									
USR GC Excavator (monthly)			0.00	0.00	7500.00	0.00	0.00	7500.00	
	7.00	MO	0	0	52,500	0	0	52,500	7500.00
USR GC Dump Truck (3)			0.00	0.00	0.00	0.00	75.00	75.00	
	3696.00	HR	0	0	0	0	277,200	277,200	75.00
USR GC Excavator w/ Breaker			0.00	0.00	8300.00	0.00	0.00	8300.00	
	1.00	MO	0	0	8,300	0	0	8,300	8300.00
USR GC Excavator, Long Reach (monthly)			0.00	0.00	10200.00	0.00	0.00	10200.00	
	7.00	MO	0	0	71,400	0	0	71,400	10200.00
USR GC Operator			0.00	30.52	0.00	0.00	0.00	30.52	
	2464.00	HR	0	75,201	0	0	0	75,201	30.52
USR GC Laborer			0.00	23.57	0.00	0.00	0.00	23.57	
	2464.00	HR	0	58,076	0	0	0	58,076	23.57
USR GC Foreman			0.00	31.52	0.00	0.00	0.00	31.52	
	1232.00	HR	0	38,833	0	0	0	38,833	31.52
USR GC Misc. Daily Materials			0.00	0.00	0.00	200.00	0.00	200.00	
	154.00	DA	0	0	0	30,800	0	30,800	200.00
TOTAL Excavate Bank Soils	46500	CY	0	172,110	132,200	30,800	277,200	612,310	13.17

40.25. ALLOWANCE Down Time Bank Exc.	QUANTY	UOM	MANHRS	LABOR	EQUIPMNT	MATERIAL	SUBCONT	TOTAL COST	UNIT COST
40.25. ALLOWANCE Down Time Bank Exc.									
Allowance down time 7 months x 5% = 0.35 months, say 0.5 months.									
USR GC Excavator (monthly)			0.00	0.00	7000.00	0.00	0.00	7000.00	
	0.50	MO	0	0	3,500	0	0	3,500	7000.00
USR GC Excavator, Long Reach (monthly)			0.00	0.00	10200.00	0.00	0.00	10200.00	
	0.50	MO	0	0	5,100	0	0	5,100	10200.00
TOTAL ALLOWANCE Down Time Bank Exc.			0	0	8,600	0	0	8,600	

40.40. O&M Truck Decon Facilities	QUANTY	UOM	MANHRS	LABOR	EQUIPMNT	MATERIAL	SUBCONT	TOTAL COST	UNIT COST
40.40. O&M Truck Decon Facilities									
USR GC Pressure Washer			0.00	0.00	0.00	3000.00	0.00	3000.00	
ALLOWANCE	2.00	EA	0	0	0	6,000	0	6,000	3000.00
USR GC Trash Pump w/ Suct. & Disch. Hse			0.00	0.00	0.00	5000.00	0.00	5000.00	
ALLOWANCE	2.00	EA	0	0	0	10,000	0	10,000	5000.00
USR GC Laborer			0.00	23.57	0.00	0.00	0.00	23.57	
	5984.00	HR	0	141,043	0	0	0	141,043	23.57
TOTAL O&M Truck Decon Facilities	89700	CY	0	141,043	0	16,000	0	157,043	1.75
TOTAL Excavate & Transport Sed./Soils			0	632,787	439,700	104,000	834,900	2,011,387	

42.10. Manage Drying Area	QUANTY	UOM	MANHRS	LABOR	EQUIPMNT	MATERIAL	SUBCONT	TOTAL COST	UNIT COST
42. Dewatering of Excavated Material									
42.10. Manage Drying Area									
USR GC Front End Loader (monthly)			0.00	0.00	3650.00	0.00	0.00	3650.00	
	17.00	MO	0	0	62,050	0	0	62,050	3650.00
USR GC Operator			0.00	30.52	0.00	0.00	0.00	30.52	
	2922.00	HR	0	89,179	0	0	0	89,179	30.52
USR GC Laborer			0.00	23.57	0.00	0.00	0.00	23.57	
	2922.00	HR	0	68,872	0	0	0	68,872	23.57
USR GC Silt Sack			0.00	0.00	0.00	25.00	0.00	25.00	
	374.00	EA	0	0	0	9,350	0	9,350	25.00
TOTAL Manage Drying Area	17.00	MO	0	158,051	62,050	9,350	0	229,451	13497.12

42.20. O & M WTS	QUANTY	UOM	MANHRS	LABOR	EQUIPMNT	MATERIAL	SUBCONT	TOTAL COST	UNIT COST

42.20. O & M WTS
Operation and Maintenance of water treatment system
Electricity - ALLOWANCE $/mo assume $1500/mo

Carbon: Assume one change per month 1760# x 2 units x 17 months = 59840#

Bag Filter Bags: Assume 4 bags per filter per shift x 4 filters x 1 shift per day x 1.4 years x 365 days per year = 8176 bags

Assume weekly sampling throughout project.

USR GC Laborer			0.00	23.57	0.00	0.00	0.00	23.57	
Assume operation 12 hours per day.	6120.00	HR	0	144,248	0	0	0	144,248	23.57
USR GC Carbon Replacement			0.00	0.00	0.00	2.00	0.00	2.00	
	59840	LB	0	0	0	119,680	0	119,680	2.00
USR GC Bag Filter Bags			0.00	0.00	0.00	2.90	0.00	2.90	
	8176.00	EA	0	0	0	23,710	0	23,710	2.90
USR GC ALLOWANCE Elec Svc for WTS			0.00	0.00	0.00	0.00	1500.00	1500.00	
	17.00	MO	0	0	0	0	25,500	25,500	1500.00
USR GC Spent Carbon Removal & Disposal			0.00	0.00	0.00	0.00	0.25	0.25	
	59840	LB	0	0	0	0	14,960	14,960	0.25
USR GC Anal. TSS			0.00	0.00	0.00	0.00	30.00	30.00	
	73.00	EA	0	0	0	0	2,190	2,190	30.00
USR GC Anal. O & G			0.00	0.00	0.00	0.00	30.00	30.00	
	73.00	EA	0	0	0	0	2,190	2,190	30.00
USR GC Anal. Phenol			0.00	0.00	0.00	0.00	30.00	30.00	
	73.00	EA	0	0	0	0	2,190	2,190	30.00
USR GC Anal. Settlable Solids			0.00	0.00	0.00	0.00	30.00	30.00	
	73.00	EA	0	0	0	0	2,190	2,190	30.00
USR GC Anal. PCBs			0.00	0.00	0.00	0.00	132.50	132.50	
	73.00	EA	0	0	0	0	9,673	9,673	132.50
USR GC Anal. Iron (total)			0.00	0.00	0.00	0.00	30.00	30.00	
	73.00	EA	0	0	0	0	2,190	2,190	30.00
USR GC Anal. pH			0.00	0.00	0.00	0.00	8.00	8.00	
	73.00	EA	0	0	0	0	584	584	8.00
USR GC Anal. Temp. (field measurement)			0.00	0.00	0.00	0.00	0.00	0.00	
	73.00	EA	0	0	0	0	0	0	0.00

42.20. O & M WTS	QUANTY	UOM	MANHRS	LABOR	EQUIPMNT	MATERIAL	SUBCONT	TOTAL COST	UNIT COST
TOTAL O & M WTS	17.00	MO	0	144,248	0	143,390	61,667	349,305	20547.37
TOTAL Dewatering of Excavated Material			0	302,299	62,050	152,740	61,667	578,756	

46.20. Characterization Sampling	QUANTY	UOM	MANHRS	LABOR	EQUIPMNT	MATERIAL	SUBCONT	TOTAL COST	UNIT COST
46. Sampling									
46.20. Characterization Sampling									
USR GC PCB Analysis (1/150 tn)			0.00	0.00	0.00	0.00	132.50	132.50	
	885.00	EA	0	0	0	0	117,263	117,263	132.50
USR GC TCLP Analysis (1/2000 tn)			0.00	0.00	0.00	0.00	1095.00	1095.00	
	67.00	EA	0	0	0	0	73,365	73,365	1095.00
USR GC Dioxin Analysis (1/2000 tn)			0.00	0.00	0.00	0.00	400.00	400.00	
	67.00	EA	0	0	0	0	26,800	26,800	400.00
USR GC RCRA Characteristics (1/2000 tn) (Ignitability, Corrosivity, Reactivity)			0.00	0.00	0.00	0.00	215.00	215.00	
	67.00	EA	0	0	0	0	14,405	14,405	215.00
USR GC pH (1/2000 tn)			0.00	0.00	0.00	0.00	15.00	15.00	
	67.00	EA	0	0	0	0	1,005	1,005	15.00
USR GC Moisture Content (1/2000 tn)			0.00	0.00	0.00	0.00	10.00	10.00	
	67.00	EA	0	0	0	0	670	670	10.00
TOTAL Characterization Sampling			0	0	0	0	233,508	233,508	
TOTAL Sampling			0	0	0	0	233,508	233,508	

60.10. Import/Place River Bed Backfill	QUANTY	UOM	MANHRS	LABOR	EQUIPMNT	MATERIAL	SUBCONT	TOTAL COST	UNIT COST
60. Restoration of River Bed									
60.10. Import/Place River Bed Backfill									
USR GC Excavator (monthly)			0.00	0.00	7500.00	0.00	0.00	7500.00	
	13.00	MO	0	0	97,500	0	0	97,500	7500.00
USR GC Front End Loader (monthly)			0.00	0.00	3650.00	0.00	0.00	3650.00	
	13.00	MO	0	0	47,450	0	0	47,450	3650.00
USR GC Excavator, Long Reach (monthly)			0.00	0.00	10200.00	0.00	0.00	10200.00	
	13.00	MO	0	0	132,600	0	0	132,600	10200.00
USR GC Laborer			0.00	23.57	0.00	0.00	0.00	23.57	
	4576.00	HR	0	107,856	0	0	0	107,856	23.57
USR GC Operator			0.00	30.52	0.00	0.00	0.00	30.52	
	4576.00	HR	0	139,660	0	0	0	139,660	30.52
USR GC Misc. Daily Expenses			0.00	0.00	0.00	200.00	0.00	200.00	
	286.00	DA	0	0	0	57,200	0	57,200	200.00
USR GC Fill Material			0.00	0.00	0.00	5.00	0.00	5.00	
	7586.00	CY	0	0	0	37,930	0	37,930	5.00
USR GC 3/4" Gravel			0.00	0.00	0.00	16.50	0.00	16.50	
MEANS Site Work and Landscape Cost Data 1999 stone, 3/4" to 1/2" plus 10 miles transportation, pg 205	7444.00	CY	0	0	0	122,826	0	122,826	16.50
USR GC Rip-Rap			0.00	0.00	0.00	17.75	0.00	17.75	
MEANS Site Work and Landscape Cost Data 1999 Rip-Rap, random broken stone pg 60	22202	CY	0	0	0	394,086	0	394,086	17.75
TOTAL Import/Place River Bed Backfill			0	247,516	277,550	612,042	0	1,137,107	

60.15. ALLOWANCE Down Time Bed Backfill	QUANTY	UOM	MANHRS	LABOR	EQUIPMNT	MATERIAL	SUBCONT	TOTAL COST	UNIT COST
60.15. ALLOWANCE Down Time Bed Backfill									
Assume down time 13 months x 30% = 4 months.									
USR GC Excavator (monthly)			0.00	0.00	7500.00	0.00	0.00	7500.00	
	4.00	MO	0	0	30,000	0	0	30,000	7500.00
USR GC Front End Loader			0.00	0.00	3650.00	0.00	0.00	3650.00	
	4.00	MO	0	0	14,600	0	0	14,600	3650.00
USR GC Excavator, Long Reach (monthly)			0.00	0.00	10200.00	0.00	0.00	10200.00	
	4.00	MO	0	0	40,800	0	0	40,800	10200.00
TOTAL ALLOWANCE Down Time Bed Backfill			0	0	85,400	0	0	85,400	
TOTAL Restoration of River Bed			0	247,516	362,950	612,042	0	1,222,507	

62.12. Import & Place Fill Material	QUANTY	UOM	MANHRS	LABOR	EQUIPMNT	MATERIAL	SUBCONT	TOTAL COST	UNIT COST
62. Restoration of River Bank									
62.12. Import & Place Fill Material									
USR GC Dozer (monthly)			0.00	0.00	4500.00	0.00	0.00	4500.00	
	7.00	MO	0	0	31,500	0	0	31,500	4500.00
USR GC Compactor (monthly)			0.00	0.00	3900.00	0.00	0.00	3900.00	
	7.00	MO	0	0	27,300	0	0	27,300	3900.00
USR GC Excavator (monthly)			0.00	0.00	7500.00	0.00	0.00	7500.00	
	7.00	MO	0	0	52,500	0	0	52,500	7500.00
USR GC Excavator, Long Reach (monthly)			0.00	0.00	10200.00	0.00	0.00	10200.00	
	7.00	MO	0	0	71,400	0	0	71,400	10200.00
USR GC Laborer			0.00	23.57	0.00	0.00	0.00	23.57	
	2464.00	HR	0	58,076	0	0	0	58,076	23.57
USR GC Operator			0.00	30.52	0.00	0.00	0.00	30.52	
	2464.00	HR	0	75,201	0	0	0	75,201	30.52
USR GC Misc. Daily Expenses			0.00	0.00	0.00	200.00	0.00	200.00	
	154.00	DA	0	0	0	30,800	0	30,800	200.00
USR GC Fill Material			0.00	0.00	0.00	5.00	0.00	5.00	
	32406	CY	0	0	0	162,030	0	162,030	5.00
USR GC 3/4" Gravel			0.00	0.00	0.00	16.50	0.00	16.50	
MEANS Site Work and Landscape Cost Data 1999 stone, 3/4" to 1/2" plus 10 miles transportation, pg 205	4413.00	CY	0	0	0	72,815	0	72,815	16.50
USR GC Rip-Rap			0.00	0.00	0.00	17.75	0.00	17.75	
MEANS Site Work and Landscape Cost Data 1999 Rip-Rap, random broken stone pg 60	12843	CY	0	0	0	227,963	0	227,963	17.75
TOTAL Import & Place Fill Material			0	133,278	182,700	493,608	0	809,586	

62.15. ALLOWANCE Down Time Equip. Rent.	QUANTY	UOM	MANHRS	LABOR	EQUIPMNT	MATERIAL	SUBCONT	TOTAL COST	UNIT COST
62.15. ALLOWANCE Down Time Equip. Rent.									
Allowance down time 7 months x 5% = 0.35 months, say 0.5 months.									
USR GC Dozer			0.00	0.00	4500.00	0.00	0.00	4500.00	
	0.50	MO	0	0	2,250	0	0	2,250	4500.00
USR GC Compactor			0.00	0.00	3900.00	0.00	0.00	3900.00	
	0.50	MO	0	0	1,950	0	0	1,950	3900.00
USR GC Excavator (monthly)			0.00	0.00	7500.00	0.00	0.00	7500.00	
	0.50	MO	0	0	3,750	0	0	3,750	7500.00
USR GC Excavator, Long Reach (monthly)			0.00	0.00	10200.00	0.00	0.00	10200.00	
	0.50	MO	0	0	5,100	0	0	5,100	10200.00
TOTAL ALLOWANCE Down Time Equip. Rent.			0	0	13,050	0	0	13,050	

62.20. Restoration	QUANTY	UOM	MANHRS	LABOR	EQUIPMNT	MATERIAL	SUBCONT	TOTAL COST	UNIT COST
62.20. Restoration									
62.20.10. Revegetation									
USR GC Front End Loader			0.00	0.00	3650.00	0.00	0.00	3650.00	
	2.00	MO	0	0	7,300	0	0	7,300	3650.00
USR GC Dozer			0.00	0.00	4500.00	0.00	0.00	4500.00	
	2.00	MO	0	0	9,000	0	0	9,000	4500.00
USR GC Laborer			0.00	23.57	0.00	0.00	0.00	23.57	
	704.00	HR	0	16,593	0	0	0	16,593	23.57
USR GC Operator			0.00	30.52	0.00	0.00	0.00	30.52	
	704.00	HR	0	21,486	0	0	0	21,486	30.52
USR GC Coir Blanket			0.00	0.00	0.00	1.21	0.00	1.21	
	5986.00	SY	0	0	0	7,243	0	7,243	1.21
USR GC Geotextile			0.00	0.00	0.00	0.42	0.00	0.42	
	47886	SY	0	0	0	20,112	0	20,112	0.42
USR GC Rip-Rap			0.00	0.00	0.00	17.75	0.00	17.75	
	5986.00	CY	0	0	0	106,252	0	106,252	17.75
USR GC Seeding			0.00	0.00	0.00	0.00	0.05	0.05	
MEANS Site Work and Landscape Cost Data 1999 Rye fine textured hydro or air seeding pg 127	153648	SF	0	0	0	0	7,682	7,682	0.05
USR GC Shrubs			0.00	0.00	0.00	0.00	26.67	26.67	
MEANS Site Work and Landscape Cost Data 1999 Shrubs, Cornus mas, 2' to 3', pg 160 Planting, potted heavy or stoney soil, pg 130	2449.00	EA	0	0	0	0	65,315	65,315	26.67
USR GC Trees			0.00	0.00	0.00	0.00	166.00	166.00	
MEANS Site Work and Landscape Cost Data 1999 Populus nigra italica, 20 gal pg 137 Bagged and burlapped, 12" dia. ball, backhoe pg 130	6146.00	EA	0	0	0	0	1020236	1,020,236	166.00
USR GC Vines			0.00	0.00	0.00	0.00	2.49	2.49	
MEANS Site Work and Landscape Cost Data 1999 Ground covers, vines and	1007.00	EA	0	0	0	0	2,507	2,507	2.49

62.20. Restoration	QUANTY	UOM	MANHRS	LABOR	EQUIPMNT	MATERIAL	SUBCONT	TOTAL COST	UNIT COST
climbing plants, pg 175 Planting, plotted, 3" dia. pg 130									
TOTAL Revegetation	22750	SF	0	38,079	16,300	133,607	1095741	1,283,727	56.43
62.20.20. Bioengineering									
USR GC Front End Loader			0.00	0.00	3650.00	0.00	0.00	3650.00	
	2.00	MO	0	0	7,300	0	0	7,300	3650.00
USR GC Dozer			0.00	0.00	4500.00	0.00	0.00	4500.00	
	2.00	MO	0	0	9,000	0	0	9,000	4500.00
USR GC Laborer			0.00	23.57	0.00	0.00	0.00	23.57	
	704.00	HR	0	16,593	0	0	0	16,593	23.57
USR GC Operator			0.00	30.52	0.00	0.00	0.00	30.52	
	704.00	HR	0	21,486	0	0	0	21,486	30.52
USR GC Geotextile			0.00	0.00	0.00	0.42	0.00	0.42	
	8409.00	SY	0	0	0	3,532	0	3,532	0.42
USR GC Misc. Daily Material			0.00	0.00	0.00	200.00	0.00	200.00	
	44.00	DA	0	0	0	8,800	0	8,800	200.00
USR GC 3/4" Gravel			0.00	0.00	0.00	16.50	0.00	16.50	
MEANS Site Work and Landscape Cost Data 1999 Stone, 3/4" to 1/2" plus 10 miles transportation, pg 205.	2702.00	CY	0	0	0	44,583	0	44,583	16.50
USR GC Geogrid			0.00	0.00	0.00	0.40	0.00	0.40	
	9948.00	SY	0	0	0	3,979	0	3,979	0.40
USR GC Rip-Rap			0.00	0.00	0.00	16.50	0.00	16.50	
	2211.00	CY	0	0	0	36,482	0	36,482	16.50
USR GC Coir Blanket			0.00	0.00	0.00	1.21	0.00	1.21	
	56740	SY	0	0	0	68,655	0	68,655	1.21
USR GC Seeding			0.00	0.00	0.00	0.00	0.05	0.05	
MEANS Site Work and Landscape Cost Data 1999, Rye fine textured hyrdro or air seeding pg 71.	75677	SF	0	0	0	0	3,784	3,784	0.05
USR GC Shrubs			0.00	0.00	0.00	0.00	26.67	26.67	
MEANS Site Work and Landscape Cost Data 1999	2211.00	EA	0	0	0	0	58,967	58,967	26.67

62.20. Restoration	QUANTY UOM	MANHRS	LABOR	EQUIPMNT	MATERIAL	SUBCONT	TOTAL COST	UNIT COST
Shrubs, Cornus mas, 2' to 3', pg 160.								
USR GC Trees		0.00	0.00	0.00	0.00	166.00	166.00	
MEANS Site Work and Landscape Cost Data 1999, Populus nigra italica, 20 gal pg 137 Bagged and burlapped, 12" dia. ball, backhoe pg 130.	3027.00 EA	0	0	0	0	502,482	502,482	166.00
USR GC Vines		0.00	0.00	0.00	0.00	2.49	2.49	
MEANS Site Work and Landscape Cost Data 1999, Ground covers, vines and climbing plants, pg 175 Planting, plotted, 3" dia. pg 130	466.00 EA	0	0	0	0	1,160	1,160	2.49
TOTAL Bioengineering	199925 SF	0	38,079	16,300	166,031	566,394	786,804	3.94
62.20.30. Hard Structures								
USR GC Front End Loader		0.00	0.00	3650.00	0.00	0.00	3650.00	
	2.00 MO	0	0	7,300	0	0	7,300	3650.00
USR GC Dozer		0.00	0.00	4500.00	0.00	0.00	4500.00	
	2.00 MO	0	0	9,000	0	0	9,000	4500.00
USR GC Laborer		0.00	23.57	0.00	0.00	0.00	23.57	
	704.00 HR	0	16,593	0	0	0	16,593	23.57
USR GC Operator		0.00	30.52	0.00	0.00	0.00	30.52	
	704.00 HR	0	21,486	0	0	0	21,486	30.52
USR GC Geotextile		0.00	0.00	0.00	0.42	0.00	0.42	
	10951 SY	0	0	0	4,599	0	4,599	0.42
USR GC Misc. Daily Material		0.00	0.00	0.00	200.00	0.00	200.00	
	44.00 DA	0	0	0	8,800	0	8,800	200.00
USR GC 3/4" Gravel		0.00	0.00	0.00	16.50	0.00	16.50	
MEANS Site Work and Landscape Cost Data 1999 Stone, 3/4" to 1/2" plus 10 miles transportation, pg 205.	3356.00 CY	0	0	0	55,374	0	55,374	16.50
USR GC 6" dia. PE Perf. Pipe		0.00	0.00	0.00	0.51	0.00	0.51	
	4400.00 LF	0	0	0	2,244	0	2,244	0.51

62.20. Restoration	QUANTY	UOM	MANHRS	LABOR	EQUIPMNT	MATERIAL	SUBCONT	TOTAL COST	UNIT COST
USR GC 6" dia. PE Pipe Cplg.			0.00	0.00	0.00	1.65	0.00	1.65	
	8.00	EA	0	0	0	13	0	13	1.65
USR GC Geogrid			0.00	0.00	0.00	0.40	0.00	0.40	
	22954	SY	0	0	0	9,182	0	9,182	0.40
USR GC Rip-Rap			0.00	0.00	0.00	16.50	0.00	16.50	
	725.00	CY	0	0	0	11,963	0	11,963	16.50
USR GC Coir Blanket			0.00	0.00	0.00	1.21	0.00	1.21	
	3300.00	SY	0	0	0	3,993	0	3,993	1.21
USR GC Concrete Foundation			0.00	0.00	0.00	0.00	168.00	168.00	
MEANS Site Work and Landscape Cost Data 1999 Concrete in place including forms and reinforcing, footings strip, 36" x 12", reinforced pg 207	644.00	CY	0	0	0	0	108,192	108,192	168.00
USR GC Interlock. Segmental Block Wall			0.00	0.00	0.00	0.00	12.05	12.05	
MEANS Site Work and Landscape Cost Data 1999 Retaining walls, segmental wall system, interlocking including installation, pg 59.	68861	SF	0	0	0	0	829,775	829,775	12.05
USR GC Seeding			0.00	0.00	0.00	0.00	0.05	0.05	
MEANS Site Work and Landscape Cost Data 1999, Rye fine textured hyrdro or air seeding pg 71.	39150	SF	0	0	0	0	1,958	1,958	0.05
USR GC Shrubs			0.00	0.00	0.00	0.00	26.67	26.67	
MEANS Site Work and Landscape Cost Data 1999 Shrubs, Cornus mas, 2' to 3', pg 160.	1263.00	EA	0	0	0	0	33,684	33,684	26.67
USR GC Trees			0.00	0.00	0.00	0.00	166.00	166.00	
MEANS Site Work and Landscape Cost Data 1999, Populus nigra italica, 20 gal pg 137 Bagged and burlapped, 12" dia. ball, backhoe pg 130.	522.00	EA	0	0	0	0	86,652	86,652	166.00

62.20. Restoration	QUANTY	UOM	MANHRS	LABOR	EQUIPMNT	MATERIAL	SUBCONT	TOTAL COST	UNIT COST
USR GC Vines			0.00	0.00	0.00	0.00	2.49	2.49	
MEANS Site Work and Landscape Cost Data 1999, Ground covers, vines and climbing plants, pg 175 Planting, plotted, 3" dia. pg 130	612.00	EA	0	0	0	0	1,524	1,524	2.49
TOTAL Hard Structures	29700	SF	0	38,079	16,300	96,168	1061785	1,212,332	40.82
TOTAL Restoration			0	114,238	48,900	395,805	2723919	3,282,862	
TOTAL Restoration of River Bank			0	247,516	244,650	889,413	2723919	4,105,498	
TOTAL GE-Pittsfield EE/CA Alt. #01	1.00	EA	0	1746571	1188513	1922487	5092053	9,949,623	9949623

ALTERNATIVE 2

GE-Pittsfield EE/CA Alt. #02
Roy F. Weston, Inc.

Designed By:
Estimated By: A. Kessler

Prepared By:

Preparation Date: 00/00/00
Effective Date of Pricing: 00/00/00

Sales Tax: 0.00%

This report is not copyrighted, but the information
contained herein is For Official Use Only.

M C A C E S F O R W I N D O W S
Software Copyright (c) 1985-1998
by Building Systems Design, Inc.
Release 1.2c

GE-Pittsfield Alternative No. 2

Dry excavation to meet cleanup criteria. Open channel river diversion using sheetpiling, except in the cobble reaches or inaccessible areas where flow would be diverted from the river channel by pumping through a piping bypass. Riverbank and riverbed restoration.

See section 5.3 of EE/CA report for written description of activities.

Project Information

Escalation	0.00%
Contingency	25.00%
Engineering and Design	6.00%
USACE Construction Management	8.00%

General Contractor

Contractor Management	10.00%
Field Overhead	6.00%
Home Office Overhead	15.00%
Profit	5.00%
Bond	0.00%

SUMMARY REPORTS SUMMARY PAGE

PROJECT OWNER SUMMARY - Scope.....1
PROJECT OWNER SUMMARY - Facility.....2
PROJECT INDIRECT SUMMARY - Scope.....4
PROJECT INDIRECT SUMMARY - Facility.....5
PROJECT DIRECT SUMMARY - Scope.....7
PROJECT DIRECT SUMMARY - Facility.....8

DETAILED ESTIMATE DETAIL PAGE

10. Additional Bank Sampling.....1
20. Mobilization
    10. Mobilize Equipment.....2
    20. Setup Temporary Facilities.....3
    30. Install Temporary Fence.....4
    32. Construct Temp. Dewatering Area.....5
    34. Temporary Dewatering Area WTS.....6
    50. Erosion & Sedimentation Control.....8
    60. Clearing.....9
    70. Temporary Access Road.....10
    72. Maint. & Protection of Traffic.....11
    74. Exc. Seepage WTS (equip & matl).....12
    76. Truck Decon Facilites.....13
    90. Demobilization.....14
    92. Pavement Restoration.....15
30. Install Sheetpile
    10. Install & Remove Sheetpile.....16
32. Pumping bypass at cobble reach
    10. Setup & Teardown Pumping System.....17
    15. Setup & Teardown Diversion Dams.....18
    20. Operate and Maintain Bypass Sys.....19
34. Dewatering of river bed
    10. Dewatering of river bed.....20
    20. Setup/Teardown Seepage WTS.....21
    22. O & M of Seepage WTS.....22
40. Excavate & Transport Sed./Soils
    10. Excavate Bed Sediments.....23
    15. ALLOWANCE Down Time Bed Exc.....24
    20. Excavate Bank Soils.....25
    25. ALLOWANCE Down Time Bank Exc.....26
    40. O & M Truck Decon Facilities.....27
42. Dewatering of Excavated Material
    10. Manage Drying Area.....28
    20. O & M WTS.....29
46. Sampling
    20. Characterization Sampling.....31
60. Restoration of River Bed
    10. Import/Place River Bed Backfill.....32
    15. ALLOWANCE Down Time Bed Backfill.....33
62. Restoration of River Bank
    12. Import & Place Fill Material.....34

DETAILED ESTIMATE DETAIL PAGE

15. ALLOWANCE Down Time Bank Backfil.....35
20. Restoration.....36

No Backup Reports...

* * * END TABLE OF CONTENTS * * *

** PROJECT OWNER SUMMARY - Scope **

		QUANTITY UOM	CONTRACT	ESCALATN	CONTINGN	ENG&DES	CONST MT		TOTAL COST	UNIT COST
10	Additional Bank		577,257	0	144,314	43,294	61,189	0	826,055	
20	Mobilization		2,197,162	0	549,291	164,787	232,899	0	3,144,139	
30	Install Sheetpi		2,492,378	0	623,095	186,928	264,192	0	3,566,593	
32	Pumping bypass		1,853,218	0	463,305	138,991	196,441	0	2,651,956	
34	Dewatering of r		1,614,382	0	403,596	121,079	171,125	0	2,310,181	
40	Excavate & Tran		2,037,389	0	509,347	152,804	215,963	0	2,915,503	
42	Dewatering of E		1,453,473	0	363,368	109,011	154,068	0	2,079,921	
46	Sampling		328,766	0	82,191	24,657	34,849	0	470,464	
60	Restoration of		1,341,052	0	335,263	100,579	142,152	0	1,919,046	
62	Restoration of		5,785,482	0	1,446,371	433,911	613,261	0	8,279,025	
	GE-Pittsfield E	1.00 EA	19,680,561	0	4,920,140	1,476,042	2,086,139	0	28,162,883	28162883

** PROJECT OWNER SUMMARY - Facility **

	QUANTITY UOM	CONTRACT	ESCALATN	CONTINGN	ENG&DES	CONST MT		TOTAL COST	UNIT COST
10 Additional Bank		577,257	0	144,314	43,294	61,189	0	826,055	
20 Mobilization									
20.10 Mobilize Equ	10.00 EA	4,224	0	1,056	317	448	0	6,044	604.43
20.20 Setup Tempor		121,433	0	30,358	9,107	12,872	0	173,771	
20.30 Install Temp	15000.00 LF	97,782	0	24,445	7,334	10,365	0	139,926	9.33
20.32 Construct Te	12.00 EA	113,753	0	28,438	8,531	12,058	0	162,780	13565.00
20.34 Temporary De		103,176	0	25,794	7,738	10,937	0	147,645	
20.50 Erosion & Se		133,806	0	33,452	10,035	14,183	0	191,476	
20.60 Clearing		106,441	0	26,610	7,983	11,283	0	152,317	
20.70 Temporary Ac		689,745	0	172,436	51,731	73,113	0	987,025	
20.72 Maint. & Pro		404,356	0	101,089	30,327	42,862	0	578,633	
20.74 Exc. Seepage		92,523	0	23,131	6,939	9,807	0	132,401	
20.76 Truck Decon		48,086	0	12,021	3,606	5,097	0	68,811	
20.90 Demobilizati		115,588	0	28,897	8,669	12,252	0	165,406	
20.92 Pavement Res	8000.00 SY	166,250	0	41,563	12,469	17,623	0	237,904	29.74
TOTAL Mobilization		2,197,162	0	549,291	164,787	232,899	0	3,144,139	
30 Install Sheetpi									
30.10 Install & Re	119000.00 SF	2,492,378	0	623,095	186,928	264,192	0	3,566,593	29.97
TOTAL Install Shee		2,492,378	0	623,095	186,928	264,192	0	3,566,593	
32 Pumping bypass									
32.10 Setup & Tear	2.00 EA	615,437	0	153,859	46,158	65,236	0	880,690	440344.85
32.15 Setup & Tear	2.00 EA	26,830	0	6,708	2,012	2,844	0	38,394	19197.12
32.20 Operate and	6.00 MO	1,210,952	0	302,738	90,821	128,361	0	1,732,872	288811.94
TOTAL Pumping bypa		1,853,218	0	463,305	138,991	196,441	0	2,651,956	
34 Dewatering of r									
34.10 Dewatering o		153,385	0	38,346	11,504	16,259	0	219,494	
34.20 Setup/Teardo		127,221	0	31,805	9,542	13,485	0	182,053	
34.22 O & M of See		1,333,777	0	333,444	100,033	141,380	0	1,908,634	
TOTAL Dewatering o		1,614,382	0	403,596	121,079	171,125	0	2,310,181	
40 Excavate & Tran									
40.10 Excavate Bed	43200.00 CY	946,004	0	236,501	70,950	100,276	0	1,353,732	31.34
40.15 ALLOWANCE Do		24,921	0	6,230	1,869	2,642	0	35,661	
40.20 Excavate Ban	46500.00 CY	862,099	0	215,525	64,657	91,383	0	1,233,664	26.53

** PROJECT OWNER SUMMARY - Facility **

	QUANTITY UOM	CONTRACT	ESCALATN	CONTINGN	ENG&DES	CONST MT		TOTAL COST	UNIT COST
40.25 ALLOWANCE Do		12,460	0	3,115	935	1,321	0	17,831	
40.40 O & M Truck	89700.00 CY	191,905	0	47,976	14,393	20,342	0	274,616	3.06
TOTAL Excavate & T		2,037,389	0	509,347	152,804	215,963	0	2,915,503	
42 Dewatering of E									
42.10 Manage Dryin	31.00 MO	598,820	0	149,705	44,912	63,475	0	856,912	27642.31
42.20 O & M WTS	31.00 MO	854,653	0	213,663	64,099	90,593	0	1,223,009	39451.90
TOTAL Dewatering o		1,453,473	0	363,368	109,011	154,068	0	2,079,921	
46 Sampling									
46.20 Characteriza		328,766	0	82,191	24,657	34,849	0	470,464	
TOTAL Sampling		328,766	0	82,191	24,657	34,849	0	470,464	
60 Restoration of									
60.10 Import/Place	1.00 TN	1,304,305	0	326,076	97,823	138,256	0	1,866,460	1866460
60.15 ALLOWANCE Do		36,747	0	9,187	2,756	3,895	0	52,585	
TOTAL Restoration		1,341,052	0	335,263	100,579	142,152	0	1,919,046	
62 Restoration of									
62.12 Import & Pla		1,139,852	0	284,963	85,489	120,824	0	1,631,128	
62.15 ALLOWANCE Do		18,374	0	4,593	1,378	1,948	0	26,293	
62.20 Restoration		4,627,257	0	1,156,814	347,044	490,489	0	6,621,604	
TOTAL Restoration		5,785,482	0	1,446,371	433,911	613,261	0	8,279,025	
TOTAL GE-Pittsfiel	1.00 EA	19,680,561	0	4,920,140	1,476,042	2,086,139	0	28,162,883	28162883

** PROJECT INDIRECT SUMMARY - Scope **

	QUANTITY UOM	DIRECT	Contr MT	Field OH	Home OH	Profit	Bond	TOTAL COST	UNIT COST
10 Additional Bank		410,000	41,000	27,060	71,709	27,488	0	577,257	
20 Mobilization		1,560,546	156,055	102,996	272,939	104,627	0	2,197,162	
30 Install Sheetpi		1,770,224	177,022	116,835	309,612	118,685	0	2,492,378	
32 Pumping bypass		1,316,258	131,626	86,873	230,213	88,248	0	1,853,218	
34 Dewatering of r		1,146,623	114,662	75,677	200,544	76,875	0	1,614,382	
40 Excavate & Tran		1,447,066	144,707	95,506	253,092	97,019	0	2,037,389	
42 Dewatering of E		1,032,337	103,234	68,134	180,556	69,213	0	1,453,473	
46 Sampling		233,508	23,351	15,411	40,840	15,656	0	328,766	
60 Restoration of		952,489	95,249	62,864	166,590	63,860	0	1,341,052	
62 Restoration of		4,109,168	410,917	271,205	718,693	275,499	0	5,785,482	
GE-Pittsfield E	1.00 EA	13,978,217	1,397,822	922,562	2,444,790	937,170	0	19,680,561	19680561
Contingency								4,920,140	
SUBTOTAL								24,600,701	
Engineering and Design								1,476,042	
SUBTOTAL								26,076,743	
USACE Construction Management								2,086,139	
TOTAL INCL OWNER COSTS								28,162,883	

** PROJECT INDIRECT SUMMARY - Facility **

	QUANTITY UOM	DIRECT	Contr MT	Field OH	Home OH	Profit	Bond	TOTAL COST	UNIT COST
10 Additional Bank		410,000	41,000	27,060	71,709	27,488	0	577,257	
20 Mobilization									
20.10 Mobilize Equ	10.00 EA	3,000	300	198	525	201	0	4,224	422.38
20.20 Setup Tempor		86,248	8,625	5,692	15,085	5,783	0	121,433	
20.30 Install Temp	15000.00 LF	69,450	6,945	4,584	12,147	4,656	0	97,782	6.52
20.32 Construct Te	12.00 EA	80,793	8,079	5,332	14,131	5,417	0	113,753	9479.38
20.34 Temporary De		73,282	7,328	4,837	12,817	4,913	0	103,176	
20.50 Erosion & Se		95,036	9,504	6,272	16,622	6,372	0	133,806	
20.60 Clearing		75,600	7,560	4,990	13,222	5,069	0	106,441	
20.70 Temporary Ac		489,895	48,990	32,333	85,683	32,845	0	689,745	
20.72 Maint. & Pro		287,196	28,720	18,955	50,231	19,255	0	404,356	
20.74 Exc. Seepage		65,715	6,572	4,337	11,494	4,406	0	92,523	
20.76 Truck Decon		34,153	3,415	2,254	5,973	2,290	0	48,086	
20.90 Demobilizati		82,097	8,210	5,418	14,359	5,504	0	115,588	
20.92 Pavement Res	8000.00 SY	118,080	11,808	7,793	20,652	7,917	0	166,250	20.78
TOTAL Mobilization		1,560,546	156,055	102,996	272,939	104,627	0	2,197,162	
30 Install Sheetpi									
30.10 Install & Re	119000.00 SF	1,770,224	177,022	116,835	309,612	118,685	0	2,492,378	20.94
TOTAL Install Shee		1,770,224	177,022	116,835	309,612	118,685	0	2,492,378	
32 Pumping bypass									
32.10 Setup & Tear	2.00 EA	437,117	43,712	28,850	76,452	29,307	0	615,437	307718.28
32.15 Setup & Tear	2.00 EA	19,056	1,906	1,258	3,333	1,278	0	26,830	13415.18
32.20 Operate and	6.00 MO	860,084	86,008	56,766	150,429	57,664	0	1,210,952	201825.26
TOTAL Pumping bypa		1,316,258	131,626	86,873	230,213	88,248	0	1,853,218	
34 Dewatering of r									
34.10 Dewatering o		108,942	10,894	7,190	19,054	7,304	0	153,385	
34.20 Setup/Teardo		90,359	9,036	5,964	15,804	6,058	0	127,221	
34.22 O & M of See		947,322	94,732	62,523	165,687	63,513	0	1,333,777	
TOTAL Dewatering o		1,146,623	114,662	75,677	200,544	76,875	0	1,614,382	
40 Excavate & Tran									
40.10 Excavate Bed	43200.00 CY	671,904	67,190	44,346	117,516	45,048	0	946,004	21.90
40.15 ALLOWANCE Do		17,700	1,770	1,168	3,096	1,187	0	24,921	
40.20 Excavate Ban	46500.00 CY	612,310	61,231	40,412	107,093	41,052	0	862,099	18.54

** PROJECT INDIRECT SUMMARY - Facility **

	QUANTITY UOM	DIRECT	Contr MT	Field OH	Home OH	Profit	Bond	TOTAL COST	UNIT COST
40.25 ALLOWANCE Do		8,850	885	584	1,548	593	0	12,460	
40.40 O & M Truck	89700.00 CY	136,301	13,630	8,996	23,839	9,138	0	191,905	2.14
TOTAL Excavate & T		1,447,066	144,707	95,506	253,092	97,019	0	2,037,389	
42 Dewatering of E									
42.10 Manage Dryin	31.00 MO	425,315	42,532	28,071	74,388	28,515	0	598,820	19316.78
42.20 O & M WTS	31.00 MO	607,022	60,702	40,063	106,168	40,698	0	854,653	27569.46
TOTAL Dewatering o		1,032,337	103,234	68,134	180,556	69,213	0	1,453,473	
46 Sampling									
46.20 Characteriza		233,508	23,351	15,411	40,840	15,656	0	328,766	
TOTAL Sampling		233,508	23,351	15,411	40,840	15,656	0	328,766	
60 Restoration of									
60.10 Import/Place	1.00 TN	926,389	92,639	61,142	162,025	62,110	0	1,304,305	1304305
60.15 ALLOWANCE Do		26,100	2,610	1,723	4,565	1,750	0	36,747	
TOTAL Restoration		952,489	95,249	62,864	166,590	63,860	0	1,341,052	
62 Restoration of									
62.12 Import & Pla		809,586	80,959	53,433	141,597	54,279	0	1,139,852	
62.15 ALLOWANCE Do		13,050	1,305	861	2,282	875	0	18,374	
62.20 Restoration		3,286,532	328,653	216,911	574,814	220,346	0	4,627,257	
TOTAL Restoration		4,109,168	410,917	271,205	718,693	275,499	0	5,785,482	
TOTAL GE-Pittsfiel	1.00 EA	13,978,217	1,397,822	922,562	2,444,790	937,170	0	19,680,561	19680561
Contingency								4,920,140	
SUBTOTAL								24,600,701	
Engineering and Design								1,476,042	
SUBTOTAL								26,076,743	
USACE Construction Management								2,086,139	
TOTAL INCL OWNER COSTS								28,162,883	

** PROJECT DIRECT SUMMARY - Scope **

		QUANTITY	UOM	MANHRS	LABOR	EQUIPMNT	MATERIAL	SUBCONT	TOTAL COST	UNIT COST
10	Additional Bank Sampling			0	0	0	0	410,000	410,000	
20	Mobilization			0	407,716	82,763	230,008	840,060	1,560,546	
30	Install Sheetpile			0	0	0	396,800	1373424	1,770,224	
32	Pumping bypass at cobble reach			0	119,131	694,568	434,089	68,470	1,316,258	
34	Dewatering of river bed			0	343,056	14,600	633,127	155,840	1,146,623	
40	Excavate & Transport Sed./Soils			0	476,816	299,200	63,800	607,250	1,447,066	
42	Dewatering of Excavated Material			0	558,156	113,150	279,324	81,707	1,032,337	
46	Sampling			0	0	0	0	233,508	233,508	
60	Restoration of River Bed			0	142,798	221,850	587,842	0	952,489	
62	Restoration of River Bank			0	247,516	244,650	893,083	2723919	4,109,168	
TOTAL	GE-Pittsfield EE/CA Alt. #02	1.00	EA	0	2295189	1670780	3518071	6494177	13,978,217	13978217

Contractor Management	1,397,822
SUBTOTAL	15,376,039
Field Overhead	922,562
SUBTOTAL	16,298,601
Home Office Overhead	2,444,790
SUBTOTAL	18,743,392
Profit	937,170
TOTAL INCL INDIRECTS	19,680,561
Contingency	4,920,140
SUBTOTAL	24,600,701
Engineering and Design	1,476,042
SUBTOTAL	26,076,743
USACE Construction Management	2,086,139
TOTAL INCL OWNER COSTS	28,162,883

	QUANTITY	UOM	MANHRS	LABOR	EQUIPMNT	MATERIAL	SUBCONT	TOTAL COST	UNIT COST
10 Additional Bank Sampling			0	0	0	0	410,000	410,000	
20 Mobilization									
20.10 Mobilize Equipment	10.00	EA	0	0	0	0	3,000	3,000	300.00
20.20 Setup Temporary Facilities			0	21,498	21,350	6,900	36,500	86,248	
20.30 Install Temporary Fence	15000.00	LF	0	0	0	0	69,450	69,450	4.63
20.32 Construct Temp. Dewatering Area	12.00	EA	0	38,079	24,100	18,614	0	80,793	6732.78
20.34 Temporary Dewatering Area WTS			0	6,786	2,788	63,708	0	73,282	
20.50 Erosion & Sedimentation Control			0	30,774	10,800	25,713	27,750	95,036	
20.60 Clearing			0	0	0	0	75,600	75,600	
20.70 Temporary Access Road			0	0	0	0	489,895	489,895	
20.72 Maint. & Protection of Traffic			0	257,196	0	30,000	0	287,196	
20.74 Exc. Seepage WTS (equip & matl)			0	0	0	65,715	0	65,715	
20.76 Truck Decon Facilites			0	10,385	1,425	8,058	14,285	34,153	
20.90 Demobilization			0	42,997	22,300	11,300	5,500	82,097	
20.92 Pavement Restoration	8000.00	SY	0	0	0	0	118,080	118,080	14.76
TOTAL Mobilization			0	407,716	82,763	230,008	840,060	1,560,546	
30 Install Sheetpile									
30.10 Install & Remove Sheetpile	119000.00	SF	0	0	0	396,800	1373424	1,770,224	14.88
TOTAL Install Sheetpile			0	0	0	396,800	1373424	1,770,224	
32 Pumping bypass at cobble reach									
32.10 Setup & Teardown Pumping System	2.00	EA	0	8,654	143,993	216,000	68,470	437,117	218558.45
32.15 Setup & Teardown Diversion Dams	2.00	EA	0	8,654	5,575	4,827	0	19,056	9528.20
32.20 Operate and Maintain Bypass Sys.	6.00	MO	0	101,822	545,000	213,262	0	860,084	143347.40
TOTAL Pumping bypass at cobble reach			0	119,131	694,568	434,089	68,470	1,316,258	
34 Dewatering of river bed									
34.10 Dewatering of river bed			0	31,156	7,300	69,987	500	108,942	
34.20 Setup/Teardown Seepage WTS			0	48,859	7,300	7,200	27,000	90,359	
34.22 O & M of Seepage WTS			0	263,041	0	555,940	128,340	947,322	
TOTAL Dewatering of river bed			0	343,056	14,600	633,127	155,840	1,146,623	
40 Excavate & Transport Sed./Soils									
40.10 Excavate Bed Sediments	43200.00	CY	0	184,404	132,750	33,000	321,750	671,904	15.55
40.15 ALLOWANCE Down Time Bed Exc.			0	0	17,700	0	0	17,700	
40.20 Excavate Bank Soils	46500.00	CY	0	172,110	123,900	30,800	285,500	612,310	13.17

	QUANTITY	UOM	MANHRS	LABOR	EQUIPMNT	MATERIAL	SUBCONT	TOTAL COST	UNIT COST
40.25 ALLOWANCE Down Time Bank Exc.			0	0	8,850	0	0	8,850	
40.40 O & M Truck Decon Facilities	89700.00	CY	0	120,301	16,000	0	0	136,301	1.52
TOTAL Excavate & Transport Sed./Soils			0	476,816	299,200	63,800	607,250	1,447,066	
42 Dewatering of Excavated Material									
42.10 Manage Drying Area	31.00	MO	0	295,115	113,150	17,050	0	425,315	13719.84
42.20 O & M WTS	31.00	MO	0	263,041	0	262,274	81,707	607,022	19581.35
TOTAL Dewatering of Excavated Material			0	558,156	113,150	279,324	81,707	1,032,337	
46 Sampling									
46.20 Characterization Sampling			0	0	0	0	233,508	233,508	
TOTAL Sampling			0	0	0	0	233,508	233,508	
60 Restoration of River Bed									
60.10 Import/Place River Bed Backfill	1.00	TN	0	142,798	195,750	587,842	0	926,389	926389.10
60.15 ALLOWANCE Down Time Bed Backfill			0	0	26,100	0	0	26,100	
TOTAL Restoration of River Bed			0	142,798	221,850	587,842	0	952,489	
62 Restoration of River Bank									
62.12 Import & Place Fill Material			0	133,278	182,700	493,608	0	809,586	
62.15 ALLOWANCE Down Time Bank Backfil			0	0	13,050	0	0	13,050	
62.20 Restoration			0	114,238	48,900	399,475	2723919	3,286,532	
TOTAL Restoration of River Bank			0	247,516	244,650	893,083	2723919	4,109,168	
TOTAL GE-Pittsfield EE/CA Alt. #02	1.00	EA	0	2295189	1670780	3518071	6494177	13,978,217	13978217

Contractor Management	1,397,822
SUBTOTAL	15,376,039
Field Overhead	922,562
SUBTOTAL	16,298,601
Home Office Overhead	2,444,790
SUBTOTAL	18,743,392
Profit	937,170
TOTAL INCL INDIRECTS	19,680,561

	QUANTITY	UOM	MANHRS	LABOR	EQUIPMNT	MATERIAL	SUBCONT	TOTAL COST	UNIT COST
Contingency								4,920,140	
SUBTOTAL								24,600,701	
Engineering and Design								1,476,042	
SUBTOTAL								26,076,743	
USACE Construction Management								2,086,139	
TOTAL INCL OWNER COSTS								28,162,883	

	QUANTY	UOM	MANHRS	LABOR	EQUIPMNT	MATERIAL	SUBCONT	TOTAL COST	UNIT COST
10. Additional Bank Sampling									
USR GC Additional Bank Sampling @ Depth			0.00	0.00	0.00	0.00	60000	60000.00	
	1.00	LS	0	0	0	0	60,000	60,000	60000.00
USR GC Appenix IX Sampling @ Depth			0.00	0.00	0.00	0.00	100000	100000.00	
	1.00	LS	0	0	0	0	100,000	100,000	100000.00
USR GC Detailed Survey of River			0.00	0.00	0.00	0.00	100000	100000.00	
	1.00	LS	0	0	0	0	100,000	100,000	100000.00
USR GC Geotech Investigation & Anal.			0.00	0.00	0.00	0.00	150000	150000.00	
	1.00	LS	0	0	0	0	150,000	150,000	150000.00
TOTAL Additional Bank Sampling			0	0	0	0	410,000	410,000	

20.10. Mobilize Equipment	QUANTY	UOM	MANHRS	LABOR	EQUIPMNT	MATERIAL	SUBCONT	TOTAL COST	UNIT COST
20. Mobilization									
20.10. Mobilize Equipment									
Mobilize equipment									
Excavator 2									
Front End Loader 1									
Dozer 2									
Compactor 2									
Trencher 2									
Truck Crane 1									
TOTAL Mobilize Equipment	10.00	EA	0	0	0	0	3,000	3,000	300.00

20.20. Setup Temporary Facilities	QUANTY	UOM	MANHRS	LABOR	EQUIPMNT	MATERIAL	SUBCONT	TOTAL COST	UNIT COST
20.20. Setup Temporary Facilities									
Setup Temporary Facilities includes setup of trailers, installation of temporary utilities, install construction entrance, etc.									
USR GC Excavator (monthly)			0.00	0.00	7500.00	0.00	0.00	7500.00	
	1.00	MO	0	0	7,500	0	0	7,500	7500.00
USR GC Front End Loader (monthly)			0.00	0.00	3650.00	0.00	0.00	3650.00	
	1.00	MO	0	0	3,650	0	0	3,650	3650.00
USR GC Office Trailer Rental			0.00	0.00	300.00	0.00	0.00	300.00	
	34.00	MO	0	0	10,200	0	0	10,200	300.00
USR GC Operator			0.00	30.52	0.00	0.00	0.00	30.52	
	352.00	HR	0	10,743	0	0	0	10,743	30.52
USR GC Laborer			0.00	23.57	0.00	0.00	0.00	23.57	
	352.00	HR	0	8,297	0	0	0	8,297	23.57
USR GC Electrician			0.00	30.62	0.00	0.00	0.00	30.62	
	40.00	HR	0	1,225	0	0	0	1,225	30.62
USR GC Pipefitter			0.00	30.85	0.00	0.00	0.00	30.85	
	40.00	HR	0	1,234	0	0	0	1,234	30.85
USR GC Misc. Daily Materials			0.00	0.00	0.00	200.00	0.00	200.00	
	22.00	DA	0	0	0	4,400	0	4,400	200.00
USR GC Misc. Electrical Materials			0.00	0.00	0.00	2500.00	0.00	2500.00	
	1.00	LS	0	0	0	2,500	0	2,500	2500.00
USR GC Misc. Plumbing Materials			0.00	0.00	0.00	0.00	2500.00	2500.00	
	1.00	LS	0	0	0	0	2,500	2,500	2500.00
USR GC Office Trailer Utilities			0.00	0.00	0.00	0.00	1000.00	1000.00	
	34.00	MO	0	0	0	0	34,000	34,000	1000.00
TOTAL Setup Temporary Facilities			0	21,498	21,350	6,900	36,500	86,248	

20.30. Install Temporary Fence	QUANTY	UOM	MANHRS	LABOR	EQUIPMNT	MATERIAL	SUBCONT	TOTAL COST	UNIT COST
20.30. Install Temporary Fence									
USR GC Temporary Fence			0.00	0.00	0.00	0.00	3.38	3.38	
MEANS Site Work and Landscape Cost Data 1999 Temporary fence page 118	15000	LF	0	0	0	0	50,700	50,700	3.38
USR GC Remove wood fence			0.00	0.00	0.00	0.00	1.25	1.25	
MEANS Site Work and Landscape Cost Data 1999 Remove wood fence page 29	15000	LF	0	0	0	0	18,750	18,750	1.25
TOTAL Install Temporary Fence	15000	LF	0	0	0	0	69,450	69,450	4.63

20.32. Construct Temp. Dewatering Area	QUANTY	UOM	MANHRS	LABOR	EQUIPMNT	MATERIAL	SUBCONT	TOTAL COST	UNIT COST
20.32. Construct Temp. Dewatering Area Assume 12 areas 40'x 40' each with earthen berms, lined with PVC liner, layer of geotextile, layer of sand and layer of stone, precast concrete inlet used as sump.									
USR GC Front End Loader (monthly)			0.00	0.00	3650.00	0.00	0.00	3650.00	
	2.00	MO	0	0	7,300	0	0	7,300	3650.00
USR GC Dozer (monthly)			0.00	0.00	4500.00	0.00	0.00	4500.00	
	2.00	MO	0	0	9,000	0	0	9,000	4500.00
USR GC Compactor (monthly)			0.00	0.00	3900.00	0.00	0.00	3900.00	
	2.00	MO	0	0	7,800	0	0	7,800	3900.00
USR GC Operator			0.00	30.52	0.00	0.00	0.00	30.52	
	704.00	HR	0	21,486	0	0	0	21,486	30.52
USR GC Laborer			0.00	23.57	0.00	0.00	0.00	23.57	
	704.00	HR	0	16,593	0	0	0	16,593	23.57
USR GC PVC Liner			0.00	0.00	0.00	0.60	0.00	0.60	
	4300.00	SY	0	0	0	2,580	0	2,580	0.60
USR GC Concrete Inlet 4'dia. 4' deep			0.00	0.00	0.00	315.00	0.00	315.00	
	12.00	EA	0	0	0	3,780	0	3,780	315.00
USR GC Concrete Inlet Cover			0.00	0.00	0.00	148.00	0.00	148.00	
	12.00	EA	0	0	0	1,776	0	1,776	148.00
USR GC Inlet Grate			0.00	0.00	0.00	214.00	0.00	214.00	
	12.00	EA	0	0	0	2,568	0	2,568	214.00
USR GC 3/4" Gravel			0.00	0.00	0.00	16.50	0.00	16.50	
	240.00	CY	0	0	0	3,960	0	3,960	16.50
USR GC Sand			0.00	0.00	0.00	7.50	0.00	7.50	
	240.00	CY	0	0	0	1,800	0	1,800	7.50
USR GC Fill Material			0.00	0.00	0.00	5.00	0.00	5.00	
	430.00	CY	0	0	0	2,150	0	2,150	5.00
TOTAL Construct Temp. Dewatering Area	12.00	EA	0	38,079	24,100	18,614	0	80,793	6732.78

20.34. Temporary Dewatering Area WTS	QUANTY	UOM	MANHRS	LABOR	EQUIPMNT	MATERIAL	SUBCONT	TOTAL COST	UNIT COST

20.34. Temporary Dewatering Area WTS
Temporary dewatering area water treatment system. One WTS for each dewatering area
Assume treat 100 gpm using (1) modular tank, (4) bag filters, (1) dual bed carbon unit, one submersible pump and one effluent pump, PVC pipe and flexible hose.

Assume discharge returns water into river.

USR GC Front End Loader (monthly)			0.00	0.00	3650.00	0.00	0.00	3650.00	
	0.25	MO	0	0	913	0	0	913	3650.00
USR GC Excavator (monthly)			0.00	0.00	7500.00	0.00	0.00	7500.00	
	0.25	MO	0	0	1,875	0	0	1,875	7500.00
USR GC Carbon Units 100 gpm			0.00	0.00	0.00	13217.00	0.00	13217.00	
	1.00	EA	0	0	0	13,217	0	13,217	13217.00
USR GC Bag Filters			0.00	0.00	0.00	919.00	0.00	919.00	
	4.00	EA	0	0	0	3,676	0	3,676	919.00
USR GC ALLOWANCE PVC Pipe			0.00	0.00	0.00	1000.00	0.00	1000.00	
	1.00	LS	0	0	0	1,000	0	1,000	1000.00
USR GC ALLOWANCE Hose			0.00	0.00	0.00	1000.00	0.00	1000.00	
	1.00	LS	0	0	0	1,000	0	1,000	1000.00
USR GC Misc. Daily Materials			0.00	0.00	0.00	200.00	0.00	200.00	
	5.00	DA	0	0	0	1,000	0	1,000	200.00
USR GC Misc. Electrical Materials			0.00	0.00	0.00	7500.00	0.00	7500.00	
	1.00	LS	0	0	0	7,500	0	7,500	7500.00
USR GC Misc. Plumbing Materials			0.00	0.00	0.00	7500.00	0.00	7500.00	
	1.00	LS	0	0	0	7,500	0	7,500	7500.00
USR GC Modular Tank			0.00	0.00	0.00	28815.00	0.00	28815.00	
	1.00	EA	0	0	0	28,815	0	28,815	28815.00
USR GC Electrician			0.00	30.62	0.00	0.00	0.00	30.62	
	40.00	HR	0	1,225	0	0	0	1,225	30.62
USR GC Pipefitter			0.00	30.85	0.00	0.00	0.00	30.85	
	40.00	HR	0	1,234	0	0	0	1,234	30.85
USR GC Laborer			0.00	23.57	0.00	0.00	0.00	23.57	
	80.00	HR	0	1,886	0	0	0	1,886	23.57
USR GC Operator			0.00	30.52	0.00	0.00	0.00	30.52	
	80.00	HR	0	2,442	0	0	0	2,442	30.52

20.34. Temporary Dewatering Area WTS	QUANTY	UOM	MANHRS	LABOR	EQUIPMNT	MATERIAL	SUBCONT	TOTAL COST	UNIT COST
TOTAL Temporary Dewatering Area WTS			0	6,786	2,788	63,708	0	73,282	

20.50. Erosion & Sedimentation Control	QUANTY	UOM	MANHRS	LABOR	EQUIPMNT	MATERIAL	SUBCONT	TOTAL COST	UNIT COST
20.50. Erosion & Sedimentation Control									
20.50.10. Install Silt Fence									
MEANS Site Work and Landscape Cost Data 1999									
Silt Fence Installation pg 58 and Excavating, Utility Trench pg 52									
Trenching $0.54/lf									
Install silt fence $0.88/lf									
Backfill trench $0.43/lf									
TOTAL $1.85/lf									
TOTAL Install Silt Fence	15000	LF	0	0	0	0	27,750	27,750	1.85
20.50.30. Turbidity Barrier									
Turbidity Barrier									
Assume barriers placed across river every 100 lf, for entire EE/CA length.									
7500 lf / 1/100 lf = 75 barriers x 50 ft/barrier = 3750 lf									
USR GC Truck Crane			0.00	0.00	5400.00	0.00	0.00	5400.00	
	2.00	MO	0	0	10,800	0	0	10,800	5400.00
USR GC Laborer			0.00	23.57	0.00	0.00	0.00	23.57	
	912.00	HR	0	21,496	0	0	0	21,496	23.57
USR GC Operator			0.00	30.52	0.00	0.00	0.00	30.52	
	304.00	HR	0	9,278	0	0	0	9,278	30.52
USR GC Misc. Daily Materials			0.00	0.00	0.00	200.00	0.00	200.00	
	38.00	DA	0	0	0	7,600	0	7,600	200.00
USR GC Turbidity Barrier			0.00	0.00	0.00	4.83	0.00	4.83	
	3750.00	LF	0	0	0	18,113	0	18,113	4.83
TOTAL Turbidity Barrier	3750.00	LF	0	30,774	10,800	25,713	0	67,286	17.94
TOTAL Erosion & Sedimentation Control			0	30,774	10,800	25,713	27,750	95,036	

20.60. Clearing	QUANTY	UOM	MANHRS	LABOR	EQUIPMNT	MATERIAL	SUBCONT	TOTAL COST	UNIT COST
20.60. Clearing									
20.60.10. Clearing									
MEANS Site Work and Landscape Cost Data 1999									
Cut & Chip medium, trees to 12" dia. pg 39									
TOTAL Clearing	14.00	AC	0	0	0	0	75,600	75,600	5400.00
TOTAL Clearing			0	0	0	0	75,600	75,600	

20.70. Temporary Access Road	QUANTY	UOM	MANHRS	LABOR	EQUIPMNT	MATERIAL	SUBCONT	TOTAL COST	UNIT COST
20.70. Temporary Access Road									
20.70.10. Construct Temporary Access Road									
MEANS Site Work and Landscape Cost Data 1999									
Roads, gravel fill, no surfacing, 8" depth, pg 15									
Geotextile included in unit price, pg 57									
Temporary Road $5.60 /sy									
Geotextile $1.43 /sy									
Total $7.03 /sy									
TOTAL Construct Temporary Access Road	21700	SY	0	0	0	0	152,551	152,551	7.03
20.70.20. Remove Temporary Access Road									
MEANS Site Work and Landscape Cost Data 1999									
Pavement removal, bituminuous roads, 3" thick, pg 30									
Assume remove during excavation activities.									
TOTAL Remove Temporary Access Road	21700	SY	0	0	0	0	82,894	82,894	3.82
20.70.30. T & D of Access Road Materials									
Access road assume to be 8" thick and cover 21700 sy									
((21700 sy x 9 sf/sy x 0.67 ft) / 27 cf/cy) x 1.5 tn/cy = 7270 tn									
Assume able to dispose of material as landfill cover.									
Material loaded during removal activity.									
USR GC Trans Landfill Cover			0.00	0.00	0.00	0.00	20.00	20.00	
	7270.00	TN	0	0	0	0	145,400	145,400	20.00
USR GC Disposal Landfill Cover			0.00	0.00	0.00	0.00	15.00	15.00	
	7270.00	TN	0	0	0	0	109,050	109,050	15.00
TOTAL T & D of Access Road Materials			0	0	0	0	254,450	254,450	
TOTAL Temporary Access Road			0	0	0	0	489,895	489,895	

20.72. Maint. & Protection of Traffic	QUANTY	UOM	MANHRS	LABOR	EQUIPMNT	MATERIAL	SUBCONT	TOTAL COST	UNIT COST
20.72. Maint. & Protection of Traffic									
Assume maintenance and protection of traffic full time during excavation and backfill activities, two flagmen full time.									
USR GC Laborer			0.00	23.57	0.00	0.00	0.00	23.57	
	10912	HR	0	257,196	0	0	0	257,196	23.57
USR GC Misc. Signage			0.00	0.00	0.00	300.00	0.00	300.00	
	100.00	EA	0	0	0	30,000	0	30,000	300.00
TOTAL Maint. & Protection of Traffic			0	257,196	0	30,000	0	287,196	

20.74. Exc. Seepage WTS (equip & matl)	QUANTY	UOM	MANHRS	LABOR	EQUIPMNT	MATERIAL	SUBCONT	TOTAL COST	UNIT COST
20.74. Exc. Seepage WTS (equip & matl)									
WTS for treatment of water seeping in bypassed cells after initial removal of bulk river water. Assume system to be 300 gpm and consist of frak tank, suction pump, bag filters, carbon units and misc. piping and accessories.									
Assume setup at each sheetpiled cell along river, 18 setup/teardown events. Setup/teardown included in dewater river bed activity.									
USR GC Bag Filters 160 gpm each			0.00	0.00	0.00	1266.00	0.00	1266.00	
	4.00	EA	0	0	0	5,064	0	5,064	1266.00
USR GC Carbon Units 100 gpm parallel			0.00	0.00	0.00	13217.00	0.00	13217.00	
	3.00	EA	0	0	0	39,651	0	39,651	13217.00
USR GC ALLOWANCE PVC Pipe			0.00	0.00	0.00	3000.00	0.00	3000.00	
	1.00	LS	0	0	0	3,000	0	3,000	3000.00
USR GC ALLOWANCE Hose			0.00	0.00	0.00	3000.00	0.00	3000.00	
	1.00	LS	0	0	0	3,000	0	3,000	3000.00
USR GC Misc. Electrical Materials			0.00	0.00	0.00	7500.00	0.00	7500.00	
	1.00	LS	0	0	0	7,500	0	7,500	7500.00
USR GC Misc. Plumbing Materials			0.00	0.00	0.00	7500.00	0.00	7500.00	
	1.00	LS	0	0	0	7,500	0	7,500	7500.00
TOTAL Exc. Seepage WTS (equip & matl)			0	0	0	65,715	0	65,715	

20.76. Truck Decon Facilites	QUANTY	UOM	MANHRS	LABOR	EQUIPMNT	MATERIAL	SUBCONT	TOTAL COST	UNIT COST
20.76. Truck Decon Facilites									
Truck decon facilties includes construction of pads.									
Assume decon pads constructed of asphalt with precast concrete inlets used									
as sumps.									
20.76.10. Construct Truck Decon Pads									
USR GC Backhoe			0.00	0.00	2850.00	0.00	0.00	2850.00	
	0.50	MO	0	0	1,425	0	0	1,425	2850.00
USR GC Laborer			0.00	23.57	0.00	0.00	0.00	23.57	
	192.00	HR	0	4,525	0	0	0	4,525	23.57
USR GC Operator			0.00	30.52	0.00	0.00	0.00	30.52	
	192.00	HR	0	5,860	0	0	0	5,860	30.52
USR GC Concrete Inlet 4'dia. x 4' deep			0.00	0.00	0.00	315.00	0.00	315.00	
	6.00	EA	0	0	0	1,890	0	1,890	315.00
USR GC Concrete Inlet Cover			0.00	0.00	0.00	148.00	0.00	148.00	
	6.00	EA	0	0	0	888	0	888	148.00
USR GC PVC Liner			0.00	0.00	0.00	0.60	0.00	0.60	
	800.00	SY	0	0	0	480	0	480	0.60
USR GC 1000 gal HDPE Tank			0.00	0.00	0.00	800.00	0.00	800.00	
	6.00	EA	0	0	0	4,800	0	4,800	800.00
USR GC Asphalt Pads			0.00	0.00	0.00	0.00	14.76	14.76	
	800.00	SY	0	0	0	0	11,808	11,808	14.76
USR GC Asphalt Curbing			0.00	0.00	0.00	0.00	2.58	2.58	
MEANS Site Work and Landscape	960.00	LF	0	0	0	0	2,477	2,477	2.58
Cost Data 1999, pg 74									
TOTAL Construct Truck Decon Pads	6.00	EA	0	10,385	1,425	8,058	14,285	34,153	5692.18
TOTAL Truck Decon Facilites			0	10,385	1,425	8,058	14,285	34,153	

20.90. Demobilization	QUANTY	UOM	MANHRS	LABOR	EQUIPMNT	MATERIAL	SUBCONT	TOTAL COST	UNIT COST
20.90. Demobilization									
TOTAL Demobilize Equipment	10.00	EA	0	0	0	0	3,000	3,000	300.00
20.90.20. Teardown Temporary Facilities									
Teardown Temporary Facilities include removal of trailers, removal of temporary utilites, removal of construction entrance, etc.									
USR GC Excavator (monthly)			0.00	0.00	7500.00	0.00	0.00	7500.00	
	2.00	MO	0	0	15,000	0	0	15,000	7500.00
USR GC Front End Loader (monthly)			0.00	0.00	3650.00	0.00	0.00	3650.00	
	2.00	MO	0	0	7,300	0	0	7,300	3650.00
USR GC Operator			0.00	30.52	0.00	0.00	0.00	30.52	
	704.00	HR	0	21,486	0	0	0	21,486	30.52
USR GC Laborer			0.00	23.57	0.00	0.00	0.00	23.57	
	704.00	HR	0	16,593	0	0	0	16,593	23.57
USR GC Electrician			0.00	30.62	0.00	0.00	0.00	30.62	
	80.00	HR	0	2,450	0	0	0	2,450	30.62
USR GC Pipefitter			0.00	30.85	0.00	0.00	0.00	30.85	
	80.00	HR	0	2,468	0	0	0	2,468	30.85
USR GC Misc. Daily Materials			0.00	0.00	0.00	200.00	0.00	200.00	
	44.00	DA	0	0	0	8,800	0	8,800	200.00
USR GC Misc. Electrical Materials			0.00	0.00	0.00	2500.00	0.00	2500.00	
	1.00	LS	0	0	0	2,500	0	2,500	2500.00
USR GC Misc. Plumbing Materials			0.00	0.00	0.00	0.00	2500.00	2500.00	
	1.00	LS	0	0	0	0	2,500	2,500	2500.00
TOTAL Teardown Temporary Facilities			0	42,997	22,300	11,300	2,500	79,097	
TOTAL Demobilization			0	42,997	22,300	11,300	5,500	82,097	

20.92. Pavement Restoration	QUANTY	UOM	MANHRS	LABOR	EQUIPMNT	MATERIAL	SUBCONT	TOTAL COST	UNIT COST
20.92. Pavement Restoration									
MEANS Site Work and Landscape Cost Data 1999, pg 71									
TOTAL Pavement Restoration	8000.00	SY	0	0	0	0	118,080	118,080	14.76
TOTAL Mobilization			0	407,716	82,763	230,008	840,060	1,560,546	

30.10. Install & Remove Sheetpile	QUANTY	UOM	MANHRS	LABOR	EQUIPMNT	MATERIAL	SUBCONT	TOTAL COST	UNIT COST

30. Install Sheetpile

30.10. Install & Remove Sheetpile

Quotation from South Jersey Gas Project August, 1999.
Sheetpile river in 400' sections, each block assumed to be 40' wide by 400' long.

Sheetpile length of river except cobble reach section.
Total river length 7300 lf - cobble reach length 2100 lf = 5200 lf
Assume 20' sheetpile height x 5200 total length = 104,000 sf
Assume use sheetpile (3) times.

Cross sections assume reuse piles (3) times, 40' sides
2 ends x 40' each side x 20' depth = 1600 sf
# of setups 5200 lf / 400 sections = 13 + 1 = 14 setups
Total cross section sheetpile area required if do not reuse sheetpile
1600 sf x 14 setups x 2 sides = 44800 sf

Required quantity of sheetpile assuming install and remove 3X before requiring new sheetpile
104,000 sf + 44800 sf) / 3 uses = 49600 sf

Total sheetpile material quantity 49,600 sf
Total sheetpile installation and removal quantity = 148,800 sf

USR GC Sheet Pile Material			0.00	0.00	0.00	8.00	0.00	8.00	
	49600	SF	0	0	0	396,800	0	396,800	8.00
USR GC Sheet Pile Install (Subcontract)			0.00	0.00	0.00	0.00	6.00	6.00	
	148800	SF	0	0	0	0	892,800	892,800	6.00
USR GC Sheet Pile Remove (Subcontract)			0.00	0.00	0.00	0.00	3.23	3.23	
	148800	SF	0	0	0	0	480,624	480,624	3.23
TOTAL Install & Remove Sheetpile	119000	SF	0	0	0	396,800	1373424	1,770,224	14.88
TOTAL Install Sheetpile			0	0	0	396,800	1373424	1,770,224	

32.10. Setup & Teardown Pumping System	QUANTY	UOM	MANHRS	LABOR	EQUIPMNT	MATERIAL	SUBCONT	TOTAL COST	UNIT COST
32. Pumping bypass at cobble reach									
32.10. Setup & Teardown Pumping System									
USR GC Godwin Pump Delivery			0.00	0.00	16150.00	0.00	0.00	16150.00	
	1.00	LS	0	0	16,150	0	0	16,150	16150.00
USR GC Pumps and Piping 1st Month Rent			0.00	0.00	121668	0.00	0.00	121667.50	
Godwin Quotation dated July 9, 1999.	1.00	MO	0	0	121,668	0	0	121,668	121667.50
USR GC Diesel Pump Enclosures			0.00	0.00	0.00	18000.00	0.00	18000.00	
	12.00	EA	0	0	0	216,000	0	216,000	18000.00
USR GC Truck Crane			0.00	0.00	435.00	0.00	0.00	435.00	
	10.00	DA	0	0	4,350	0	0	4,350	435.00
USR GC Front End Loader			0.00	0.00	3650.00	0.00	0.00	3650.00	
	0.50	MO	0	0	1,825	0	0	1,825	3650.00
USR GC Laborer			0.00	23.57	0.00	0.00	0.00	23.57	
	160.00	HR	0	3,771	0	0	0	3,771	23.57
USR GC Operator			0.00	30.52	0.00	0.00	0.00	30.52	
	160.00	HR	0	4,883	0	0	0	4,883	30.52
USR GC Godwin Pump Setup System			0.00	0.00	0.00	0.00	34235	34235.00	
Includes travel to site, labor, and service truck for assisting in setup of pump and piping system.	2.00	EA	0	0	0	0	68,470	68,470	34235.00
TOTAL Setup & Teardown Pumping System	2.00	EA	0	8,654	143,993	216,000	68,470	437,117	218558.45

32.15. Setup & Teardown Diversion Dams	QUANTY	UOM	MANHRS	LABOR	EQUIPMNT	MATERIAL	SUBCONT	TOTAL COST	UNIT COST
32.15. Setup & Teardown Diversion Dams									
Assume reuse gravel material.									
USR GC Front End Loader			0.00	0.00	3650.00	0.00	0.00	3650.00	
	0.50	MO	0	0	1,825	0	0	1,825	3650.00
USR GC Excavator			0.00	0.00	7500.00	0.00	0.00	7500.00	
	0.50	MO	0	0	3,750	0	0	3,750	7500.00
USR GC Laborer			0.00	23.57	0.00	0.00	0.00	23.57	
	160.00	HR	0	3,771	0	0	0	3,771	23.57
USR GC Operator			0.00	30.52	0.00	0.00	0.00	30.52	
	160.00	HR	0	4,883	0	0	0	4,883	30.52
USR GC PVC Liner			0.00	0.00	0.00	0.60	0.00	0.60	
	920.00	SY	0	0	0	552	0	552	0.60
USR GC Rip-Rap			0.00	0.00	0.00	17.75	0.00	17.75	
	100.00	CY	0	0	0	1,775	0	1,775	17.75
USR GC Fill Material			0.00	0.00	0.00	5.00	0.00	5.00	
	500.00	CY	0	0	0	2,500	0	2,500	5.00
TOTAL Setup & Teardown Diversion Dams	2.00	EA	0	8,654	5,575	4,827	0	19,056	9528.20

32.20. Operate and Maintain Bypass Sys.	QUANTY	UOM	MANHRS	LABOR	EQUIPMNT	MATERIAL	SUBCONT	TOTAL COST	UNIT COST
32.20. Operate and Maintain Bypass Sys. Assume operate for 6 months.									
USR GC Pumps and Piping after 1st			0.00	0.00	109000	0.00	0.00	109000.00	
month rental, monthly rate	5.00	MO	0	0	545,000	0	0	545,000	109000.00
Godwin Quotation dated July 9, 1999.									
USR GC Laborer			0.00	23.57	0.00	0.00	0.00	23.57	
Assume 24 hour/day operation	4320.00	HR	0	101,822	0	0	0	101,822	23.57
USR GC Fuel			0.00	0.00	0.00	0.65	0.00	0.65	
Assume use off-road vehicle diesel fuel.	323480	GL	0	0	0	210,262	0	210,262	0.65
USR GC Misc. Materials (monthly)			0.00	0.00	0.00	500.00	0.00	500.00	
	6.00	MO	0	0	0	3,000	0	3,000	500.00
TOTAL Operate and Maintain Bypass Sys.	6.00	MO	0	101,822	545,000	213,262	0	860,084	143347.40
TOTAL Pumping bypass at cobble reach			0	119,131	694,568	434,089	68,470	1,316,258	

34.10. Dewatering of river bed	QUANTY	UOM	MANHRS	LABOR	EQUIPMNT	MATERIAL	SUBCONT	TOTAL COST	UNIT COST
34. Dewatering of river bed									
Dewater bypassed sheet pile cells.									
Assume 18 moves. Assume two days each move.									
14 (400' sheet pile cells) + 4 (cobble reach) = 18 moves									
34.10. Dewatering of river bed									
34.10.10. Setup, Maintain, & Teardown									
USR GC Front End Loader (monthly)			0.00	0.00	3650.00	0.00	0.00	3650.00	
	2.00	MO	0	0	7,300	0	0	7,300	3650.00
USR GC Godwin 8" Diesel Pump			0.00	0.00	0.00	59600.00	0.00	59600.00	
	1.00	EA	0	0	0	59,600	0	59,600	59600.00
USR GC Godwin Suction Hose 10 ft sect.			0.00	0.00	0.00	1413.00	0.00	1413.00	
	2.00	EA	0	0	0	2,826	0	2,826	1413.00
USR GC Godwin Discharge Hose $/lf			0.00	0.00	0.00	8.30	0.00	8.30	
	400.00	LF	0	0	0	3,320	0	3,320	8.30
USR GC Godwin Equipment Delivery			0.00	0.00	0.00	0.00	250.00	250.00	
	2.00	EA	0	0	0	0	500	500	250.00
USR GC Laborer			0.00	23.57	0.00	0.00	0.00	23.57	
	576.00	HR	0	13,576	0	0	0	13,576	23.57
USR GC Operator			0.00	30.52	0.00	0.00	0.00	30.52	
	576.00	HR	0	17,580	0	0	0	17,580	30.52
USR GC 3/4" Gravel			0.00	0.00	0.00	16.50	0.00	16.50	
	257.00	CY	0	0	0	4,241	0	4,241	16.50
TOTAL Setup, Maintain, & Teardown	40.00	MO	0	31,156	7,300	69,987	500	108,942	2723.56
TOTAL Dewatering of river bed			0	31,156	7,300	69,987	500	108,942	

34.20. Setup/Teardown Seepage WTS

34.20. Setup/Teardown Seepage WTS
Assume 18 setup/teardown events, two days each, total 36 days.

	QUANTY	UOM	MANHRS	LABOR	EQUIPMNT	MATERIAL	SUBCONT	TOTAL COST	UNIT COST
USR GC Front End Loader (monthly)			0.00	0.00	3650.00	0.00	0.00	3650.00	
	2.00	MO	0	0	7,300	0	0	7,300	3650.00
USR GC Misc. Daily Materials			0.00	0.00	0.00	200.00	0.00	200.00	
	36.00	DA	0	0	0	7,200	0	7,200	200.00
USR GC Laborer			0.00	23.57	0.00	0.00	0.00	23.57	
	576.00	HR	0	13,576	0	0	0	13,576	23.57
USR GC Operator			0.00	30.52	0.00	0.00	0.00	30.52	
	576.00	HR	0	17,580	0	0	0	17,580	30.52
USR GC Electrician			0.00	30.62	0.00	0.00	0.00	30.62	
	288.00	HR	0	8,819	0	0	0	8,819	30.62
USR GC Pipefitter			0.00	30.85	0.00	0.00	0.00	30.85	
	288.00	HR	0	8,885	0	0	0	8,885	30.85
USR GC Truck w/ Flatbed Trailer			0.00	0.00	0.00	0.00	750.00	750.00	
	36.00	DA	0	0	0	0	27,000	27,000	750.00
TOTAL Setup/Teardown Seepage WTS			0	48,859	7,300	7,200	27,000	90,359	

34.22. O & M of Seepage WTS	QUANTY	UOM	MANHRS	LABOR	EQUIPMNT	MATERIAL	SUBCONT	TOTAL COST	UNIT COST
34.22. O & M of Seepage WTS									
Electricity - ALLOWANCE $/mo assume $1500/mo									
Carbon - Assume one change per month 1760# x 6 units x 31 months = 327360#									
Bag Filter Bags - Assume 2 bags per filter per day x 4 filters x 1 shift x 2.6 years x 365 days/yr = 7592 bags.									
USR GC Frak Tank 21,000 gal (monthly)			0.00	0.00	0.00	1100.00	0.00	1100.00	
	93.00	MO	0	0	0	102,300	0	102,300	1100.00
USR GC Laborer			0.00	23.57	0.00	0.00	0.00	23.57	
Assume operation 12 hours per day. Operates pumping system and seepage WTS.	11160	HR	0	263,041	0	0	0	263,041	23.57
USR GC Carbon Replacement			0.00	0.00	0.00	1.28	0.00	1.28	
	327360	LB	0	0	0	419,021	0	419,021	1.28
USR GC Bag Filter Bags			0.00	0.00	0.00	4.56	0.00	4.56	
	7592.00	EA	0	0	0	34,620	0	34,620	4.56
USR GC ALLOWANCE Elec Svs for WTS #2			0.00	0.00	0.00	0.00	1500.00	1500.00	
	31.00	MO	0	0	0	0	46,500	46,500	1500.00
USR GC Spent Carbon Removal & Disposal			0.00	0.00	0.00	0.00	0.25	0.25	
	327360	LB	0	0	0	0	81,840	81,840	0.25
TOTAL O & M of Seepage WTS			0	263,041	0	555,940	128,340	947,322	
TOTAL Dewatering of river bed			0	343,056	14,600	633,127	155,840	1,146,623	

40.10. Excavate Bed Sediments	QUANTY	UOM	MANHRS	LABOR	EQUIPMNT	MATERIAL	SUBCONT	TOTAL COST	UNIT COST
40. Excavate & Transport Sed./Soils									
40.10. Excavate Bed Sediments									
Estimated duration to excavate 43,200 cy based on 250 cy per = 7.5 months									
USR GC Excavator (monthly)			0.00	0.00	7500.00	0.00	0.00	7500.00	
	7.50	MO	0	0	56,250	0	0	56,250	7500.00
USR GC Dump Truck (2)			0.00	0.00	0.00	0.00	75.00	75.00	
	2640.00	HR	0	0	0	0	198,000	198,000	75.00
USR GC Excavator, Long Reach (monthly)			0.00	0.00	10200.00	0.00	0.00	10200.00	
	7.50	MO	0	0	76,500	0	0	76,500	10200.00
USR GC Operator			0.00	30.52	0.00	0.00	0.00	30.52	
	2640.00	HR	0	80,573	0	0	0	80,573	30.52
USR GC Laborer			0.00	23.57	0.00	0.00	0.00	23.57	
	2640.00	HR	0	62,225	0	0	0	62,225	23.57
USR GC Misc. Daily Materials			0.00	0.00	0.00	200.00	0.00	200.00	
	165.00	DA	0	0	0	33,000	0	33,000	200.00
USR GC Foreman			0.00	31.52	0.00	0.00	0.00	31.52	
	1320.00	HR	0	41,606	0	0	0	41,606	31.52
USR GC Roll-Off Truck w/ Sludge Box (1)			0.00	0.00	0.00	0.00	750.00	750.00	
	165.00	DA	0	0	0	0	123,750	123,750	750.00
TOTAL Excavate Bed Sediments	43200	CY	0	184,404	132,750	33,000	321,750	671,904	15.55

40.15. ALLOWANCE Down Time Bed Exc.	QUANTY	UOM	MANHRS	LABOR	EQUIPMNT	MATERIAL	SUBCONT	TOTAL COST	UNIT COST
40.15. ALLOWANCE Down Time Bed Exc.									
Assume down time 1.5 months x 30% (bypass excavation) = 0.45 months, say 0.5 months.									
Assume down time 6 months x 10% (sheet pile areas) = 0.6 months, say 1 month.									
USR GC Excavator (monthly)			0.00	0.00	7500.00	0.00	0.00	7500.00	
	1.00	MO	0	0	7,500	0	0	7,500	7500.00
USR GC Excavator, Long Reach(monthly)			0.00	0.00	10200.00	0.00	0.00	10200.00	
	1.00	MO	0	0	10,200	0	0	10,200	10200.00
TOTAL ALLOWANCE Down Time Bed Exc.			0	0	17,700	0	0	17,700	

40.20. Excavate Bank Soils	QUANTY	UOM	MANHRS	LABOR	EQUIPMNT	MATERIAL	SUBCONT	TOTAL COST	UNIT COST
40.20. Excavate Bank Soils									
Estimated duration to excavate 46,500 cy based on 300 cy per = 7.0 months									
Includes removal of concrete and misc. structures along river bank.									
USR GC Excavator (monthly)			0.00	0.00	7500.00	0.00	0.00	7500.00	
	7.00	MO	0	0	52,500	0	0	52,500	7500.00
USR GC Dump Truck (3)			0.00	0.00	0.00	0.00	75.00	75.00	
	3696.00	HR	0	0	0	0	277,200	277,200	75.00
USR GC Excavator w/ Breaker			0.00	0.00	0.00	0.00	8300.00	8300.00	
	1.00	MO	0	0	0	0	8,300	8,300	8300.00
USR GC Excavator, Long Reach (monthly)			0.00	0.00	10200.00	0.00	0.00	10200.00	
	7.00	MO	0	0	71,400	0	0	71,400	10200.00
USR GC Operator			0.00	30.52	0.00	0.00	0.00	30.52	
	2464.00	HR	0	75,201	0	0	0	75,201	30.52
USR GC Laborer			0.00	23.57	0.00	0.00	0.00	23.57	
	2464.00	HR	0	58,076	0	0	0	58,076	23.57
USR GC Misc. Daily Materials			0.00	0.00	0.00	200.00	0.00	200.00	
	154.00	DA	0	0	0	30,800	0	30,800	200.00
USR GC Foreman			0.00	31.52	0.00	0.00	0.00	31.52	
	1232.00	HR	0	38,833	0	0	0	38,833	31.52
TOTAL Excavate Bank Soils	46500	CY	0	172,110	123,900	30,800	285,500	612,310	13.17

40.25. ALLOWANCE Down Time Bank Exc.	QUANTY	UOM	MANHRS	LABOR	EQUIPMNT	MATERIAL	SUBCONT	TOTAL COST	UNIT COST
40.25. ALLOWANCE Down Time Bank Exc.									
Assume down time 7 months x 5% = 0.35 months, say 0.5 months.									
USR GC Excavator (monthly)			0.00	0.00	7500.00	0.00	0.00	7500.00	
	0.50	MO	0	0	3,750	0	0	3,750	7500.00
USR GC Excavator, Long Reach(monthly)			0.00	0.00	10200.00	0.00	0.00	10200.00	
	0.50	MO	0	0	5,100	0	0	5,100	10200.00
TOTAL ALLOWANCE Down Time Bank Exc.			0	0	8,850	0	0	8,850	

40.40. O & M Truck Decon Facilities	QUANTY	UOM	MANHRS	LABOR	EQUIPMNT	MATERIAL	SUBCONT	TOTAL COST	UNIT COST
40.40. O & M Truck Decon Facilities									
USR GC Pressure Washer			0.00	0.00	3000.00	0.00	0.00	3000.00	
ALLOWANCE	2.00	EA	0	0	6,000	0	0	6,000	3000.00
USR GC Trash Pump w/ Suct. & Disch. Hse			0.00	0.00	5000.00	0.00	0.00	5000.00	
ALLOWANCE	2.00	EA	0	0	10,000	0	0	10,000	5000.00
USR GC Laborer			0.00	23.57	0.00	0.00	0.00	23.57	
	5104.00	HR	0	120,301	0	0	0	120,301	23.57
TOTAL O & M Truck Decon Facilities	89700	CY	0	120,301	16,000	0	0	136,301	1.52
TOTAL Excavate & Transport Sed./Soils			0	476,816	299,200	63,800	607,250	1,447,066	

42.10. Manage Drying Area	QUANTY	UOM	MANHRS	LABOR	EQUIPMNT	MATERIAL	SUBCONT	TOTAL COST	UNIT COST
42. Dewatering of Excavated Material									
42.10. Manage Drying Area									
USR GC Front End Loader (monthly)			0.00	0.00	3650.00	0.00	0.00	3650.00	
	31.00	MO	0	0	113,150	0	0	113,150	3650.00
USR GC Operator			0.00	30.52	0.00	0.00	0.00	30.52	
	5456.00	HR	0	166,517	0	0	0	166,517	30.52
USR GC Laborer			0.00	23.57	0.00	0.00	0.00	23.57	
	5456.00	HR	0	128,598	0	0	0	128,598	23.57
USR GC Silt Sack			0.00	0.00	0.00	25.00	0.00	25.00	
	682.00	EA	0	0	0	17,050	0	17,050	25.00
TOTAL Manage Drying Area	31.00	MO	0	295,115	113,150	17,050	0	425,315	13719.84

42.20. O & M WTS	QUANTY	UOM	MANHRS	LABOR	EQUIPMNT	MATERIAL	SUBCONT	TOTAL COST	UNIT COST

42.20. O & M WTS

Operation and Maintenance of water treatment system
Electricity - ALLOWANCE $/mo assume $1500/mo

Carbon - Assume one change per month 1760# x 2 units x 31 months = 109120#

Bag Filter Bags - Assume 4 bags per filter per shift x 4 filters x 1 shifts per day x 2.6 years x 365 days per year = 15184 bags

Assume weekly sampling.

USR GC Laborer			0.00	23.57	0.00	0.00	0.00	23.57	
Assume operation 12 hours per day.	11160	HR	0	263,041	0	0	0	263,041	23.57
USR GC Carbon Replacement			0.00	0.00	0.00	2.00	0.00	2.00	
	109120	LB	0	0	0	218,240	0	218,240	2.00
USR GC Bag Filter Bags			0.00	0.00	0.00	2.90	0.00	2.90	
	15184	EA	0	0	0	44,034	0	44,034	2.90
USR GC ALLOWANCE Elec Svc for WTS			0.00	0.00	0.00	0.00	500.00	500.00	
	31.00	MO	0	0	0	0	15,500	15,500	500.00
USR GC Spent Carbon Removal & Disposal			0.00	0.00	0.00	0.00	0.25	0.25	
	109120	LB	0	0	0	0	27,280	27,280	0.25
USR GC Anal. TSS			0.00	0.00	0.00	0.00	30.00	30.00	
	134.00	EA	0	0	0	0	4,020	4,020	30.00
USR GC Anal. O & G			0.00	0.00	0.00	0.00	30.00	30.00	
	134.00	EA	0	0	0	0	4,020	4,020	30.00
USR GC Anal. Phenol			0.00	0.00	0.00	0.00	30.00	30.00	
	134.00	EA	0	0	0	0	4,020	4,020	30.00
USR GC Anal. Settable Solids			0.00	0.00	0.00	0.00	30.00	30.00	
	134.00	EA	0	0	0	0	4,020	4,020	30.00
USR GC Anal. PCBs			0.00	0.00	0.00	0.00	132.50	132.50	
	134.00	EA	0	0	0	0	17,755	17,755	132.50
USR GC Anal. Iron (total)			0.00	0.00	0.00	0.00	30.00	30.00	
	134.00	EA	0	0	0	0	4,020	4,020	30.00
USR GC Anal. pH			0.00	0.00	0.00	0.00	8.00	8.00	
	134.00	EA	0	0	0	0	1,072	1,072	8.00
USR GC Anal. Temp. (field measurement)			0.00	0.00	0.00	0.00	0.00	0.00	
	134.00	EA	0	0	0	0	0	0	0.00

42.20. O & M WTS	QUANTY	UOM	MANHRS	LABOR	EQUIPMNT	MATERIAL	SUBCONT	TOTAL COST	UNIT COST
TOTAL O & M WTS	31.00	MO	0	263,041	0	262,274	81,707	607,022	19581.35
TOTAL Dewatering of Excavated Material			0	558,156	113,150	279,324	81,707	1,032,337	

46.20. Characterization Sampling	QUANTY	UOM	MANHRS	LABOR	EQUIPMNT	MATERIAL	SUBCONT	TOTAL COST	UNIT COST
46. Sampling									
46.20. Characterization Sampling									
USR GC PCB Analysis (1/150 tn)			0.00	0.00	0.00	0.00	132.50	132.50	
	885.00	EA	0	0	0	0	117,263	117,263	132.50
USR GC TCLP Analysis (1/2000 tn)			0.00	0.00	0.00	0.00	1095.00	1095.00	
	67.00	EA	0	0	0	0	73,365	73,365	1095.00
USR GC Dioxin Analysis (1/2000 tn)			0.00	0.00	0.00	0.00	400.00	400.00	
	67.00	EA	0	0	0	0	26,800	26,800	400.00
USR GC RCRA Characteristics (1/2000 tn)			0.00	0.00	0.00	0.00	215.00	215.00	
	67.00	EA	0	0	0	0	14,405	14,405	215.00
USR GC pH (1/2000 tn)			0.00	0.00	0.00	0.00	15.00	15.00	
	67.00	EA	0	0	0	0	1,005	1,005	15.00
USR GC Moisture Content (1/2000 tn)			0.00	0.00	0.00	0.00	10.00	10.00	
	67.00	EA	0	0	0	0	670	670	10.00
TOTAL Characterization Sampling			0	0	0	0	233,508	233,508	
TOTAL Sampling			0	0	0	0	233,508	233,508	

60.10. Import/Place River Bed Backfill	QUANTY	UOM	MANHRS	LABOR	EQUIPMNT	MATERIAL	SUBCONT	TOTAL COST	UNIT COST
60. Restoration of River Bed									
60.10. Import/Place River Bed Backfill									
USR GC Dozer (monthly)			0.00	0.00	4500.00	0.00	0.00	4500.00	
	7.50	MO	0	0	33,750	0	0	33,750	4500.00
USR GC Compactor (monthly)			0.00	0.00	3900.00	0.00	0.00	3900.00	
	7.50	MO	0	0	29,250	0	0	29,250	3900.00
USR GC Excavator (monthly)			0.00	0.00	7500.00	0.00	0.00	7500.00	
	7.50	MO	0	0	56,250	0	0	56,250	7500.00
USR GC Excavator, Long Reach (monthly)			0.00	0.00	10200.00	0.00	0.00	10200.00	
	7.50	MO	0	0	76,500	0	0	76,500	10200.00
USR GC Laborer			0.00	23.57	0.00	0.00	0.00	23.57	
	2640.00	HR	0	62,225	0	0	0	62,225	23.57
USR GC Operator			0.00	30.52	0.00	0.00	0.00	30.52	
	2640.00	HR	0	80,573	0	0	0	80,573	30.52
USR GC Misc. Daily Expenses			0.00	0.00	0.00	200.00	0.00	200.00	
	165.00	DA	0	0	0	33,000	0	33,000	200.00
USR GC Fill Material			0.00	0.00	0.00	5.00	0.00	5.00	
	7586.00	CY	0	0	0	37,930	0	37,930	5.00
USR GC 3/4" Gravel			0.00	0.00	0.00	16.50	0.00	16.50	
MEANS Site Work and Landscape Cost Data 1999 stone, 3/4" to 1/2" plus 10 miles transportation, pg 205	7444.00	CY	0	0	0	122,826	0	122,826	16.50
USR GC Rip-Rap			0.00	0.00	0.00	17.75	0.00	17.75	
MEANS Site Work and Landscape Cost Data 1999 Rip-Rap, random broken stone pg 60	22202	CY	0	0	0	394,086	0	394,086	17.75
TOTAL Import/Place River Bed Backfill	1.00	TN	0	142,798	195,750	587,842	0	926,389	926389.10

60.15. ALLOWANCE Down Time Bed Backfill	QUANTY	UOM	MANHRS	LABOR	EQUIPMNT	MATERIAL	SUBCONT	TOTAL COST	UNIT COST
60.15. ALLOWANCE Down Time Bed Backfill									
Assume down time 1.5 months x 30% (bypass excavation)= 0.45 months, say 0.5 months.									
Assume down time 6 months x 10% (sheet pile areas)= 0.6 months, say 0.5 months.									
USR GC Dozer (monthly)			0.00	0.00	4500.00	0.00	0.00	4500.00	
	1.00	MO	0	0	4,500	0	0	4,500	4500.00
USR GC Compactor (monthly)			0.00	0.00	3900.00	0.00	0.00	3900.00	
	1.00	MO	0	0	3,900	0	0	3,900	3900.00
USR GC Excavator (monthly)			0.00	0.00	7500.00	0.00	0.00	7500.00	
	1.00	MO	0	0	7,500	0	0	7,500	7500.00
USR GC Excavator, Long Reach (monthly)			0.00	0.00	10200.00	0.00	0.00	10200.00	
	1.00	MO	0	0	10,200	0	0	10,200	10200.00
TOTAL ALLOWANCE Down Time Bed Backfill			0	0	26,100	0	0	26,100	
TOTAL Restoration of River Bed			0	142,798	221,850	587,842	0	952,489	

62.12. Import & Place Fill Material	QUANTY	UOM	MANHRS	LABOR	EQUIPMNT	MATERIAL	SUBCONT	TOTAL COST	UNIT COST
62. Restoration of River Bank									
62.12. Import & Place Fill Material									
USR GC Dozer (monthly)			0.00	0.00	4500.00	0.00	0.00	4500.00	
	7.00	MO	0	0	31,500	0	0	31,500	4500.00
USR GC Compactor (monthly)			0.00	0.00	3900.00	0.00	0.00	3900.00	
	7.00	MO	0	0	27,300	0	0	27,300	3900.00
USR GC Excavator (monthly)			0.00	0.00	7500.00	0.00	0.00	7500.00	
	7.00	MO	0	0	52,500	0	0	52,500	7500.00
USR GC Excavator, Long Reach (monthly)			0.00	0.00	10200.00	0.00	0.00	10200.00	
	7.00	MO	0	0	71,400	0	0	71,400	10200.00
USR GC Laborer			0.00	23.57	0.00	0.00	0.00	23.57	
	2464.00	HR	0	58,076	0	0	0	58,076	23.57
USR GC Operator			0.00	30.52	0.00	0.00	0.00	30.52	
	2464.00	HR	0	75,201	0	0	0	75,201	30.52
USR GC Misc. Daily Expenses			0.00	0.00	0.00	200.00	0.00	200.00	
	154.00	DA	0	0	0	30,800	0	30,800	200.00
USR GC Fill Material			0.00	0.00	0.00	5.00	0.00	5.00	
	32406	CY	0	0	0	162,030	0	162,030	5.00
USR GC 3/4" Gravel			0.00	0.00	0.00	16.50	0.00	16.50	
MEANS Site Work and Landscape Cost Data 1999 stone, 3/4" to 1/2" plus 10 miles transportation, pg 205	4413.00	CY	0	0	0	72,815	0	72,815	16.50
USR GC Rip-Rap			0.00	0.00	0.00	17.75	0.00	17.75	
MEANS Site Work and Landscape Cost Data 1999 Rip-Rap, random broken stone pg 60	12843	CY	0	0	0	227,963	0	227,963	17.75
TOTAL Import & Place Fill Material			0	133,278	182,700	493,608	0	809,586	

62.15. ALLOWANCE Down Time Bank Backfil	QUANTY	UOM	MANHRS	LABOR	EQUIPMNT	MATERIAL	SUBCONT	TOTAL COST	UNIT COST
62.15. ALLOWANCE Down Time Bank Backfil									
Assume down time 7 months x 5% = 0.35 months, say 0.5 months.									
USR GC Dozer (monthly)			0.00	0.00	4500.00	0.00	0.00	4500.00	
	0.50	MO	0	0	2,250	0	0	2,250	4500.00
USR GC Compactor (monthly)			0.00	0.00	3900.00	0.00	0.00	3900.00	
	0.50	MO	0	0	1,950	0	0	1,950	3900.00
USR GC Excavator (monthly)			0.00	0.00	7500.00	0.00	0.00	7500.00	
	0.50	MO	0	0	3,750	0	0	3,750	7500.00
USR GC Excavator, Long Reach (monthly)			0.00	0.00	10200.00	0.00	0.00	10200.00	
	0.50	MO	0	0	5,100	0	0	5,100	10200.00
TOTAL ALLOWANCE Down Time Bank Backfil			0	0	13,050	0	0	13,050	

62.20. Restoration	QUANTY	UOM	MANHRS	LABOR	EQUIPMNT	MATERIAL	SUBCONT	TOTAL COST	UNIT COST
62.20. Restoration									
62.20.10. Revegetation									
USR GC Front End Loader			0.00	0.00	3650.00	0.00	0.00	3650.00	
	2.00	MO	0	0	7,300	0	0	7,300	3650.00
USR GC Dozer			0.00	0.00	4500.00	0.00	0.00	4500.00	
	2.00	MO	0	0	9,000	0	0	9,000	4500.00
USR GC Laborer			0.00	23.57	0.00	0.00	0.00	23.57	
	704.00	HR	0	16,593	0	0	0	16,593	23.57
USR GC Operator			0.00	30.52	0.00	0.00	0.00	30.52	
	704.00	HR	0	21,486	0	0	0	21,486	30.52
USR GC Coir Blanket			0.00	0.00	0.00	1.21	0.00	1.21	
	5986.00	SY	0	0	0	7,243	0	7,243	1.21
USR GC Geotextile			0.00	0.00	0.00	0.42	0.00	0.42	
	47886	SY	0	0	0	20,112	0	20,112	0.42
USR GC Rip-Rap			0.00	0.00	0.00	17.75	0.00	17.75	
	5986.00	CY	0	0	0	106,252	0	106,252	17.75
USR GC Seeding			0.00	0.00	0.00	0.00	0.05	0.05	
MEANS Site Work and Landscape Cost Data 1999 Rye fine textured hydro or air seeding pg 127	153648	SF	0	0	0	0	7,682	7,682	0.05
USR GC Shrubs			0.00	0.00	0.00	0.00	26.67	26.67	
MEANS Site Work and Landscape Cost Data 1999 Shrubs, Cornus mas, 2' to 3', pg 160 Planting, potted heavy or stoney soil, pg 130	2449.00	EA	0	0	0	0	65,315	65,315	26.67
USR GC Trees			0.00	0.00	0.00	0.00	166.00	166.00	
MEANS Site Work and Landscape Cost Data 1999 Populus nigra italica, 20 gal pg 137 Bagged and burlapped, 12" dia. ball, backhoe pg 130	6146.00	EA	0	0	0	0	1020236	1,020,236	166.00
USR GC Vines			0.00	0.00	0.00	0.00	2.49	2.49	
MEANS Site Work and Landscape Cost Data 1999 Ground covers, vines and	1007.00	EA	0	0	0	0	2,507	2,507	2.49

62.20. Restoration	QUANTY	UOM	MANHRS	LABOR	EQUIPMNT	MATERIAL	SUBCONT	TOTAL COST	UNIT COST
climbing plants, pg 175 Planting, plotted, 3" dia. pg 130									
TOTAL Revegetation	22750	SF	0	38,079	16,300	133,607	1095741	1,283,727	56.43
62.20.20. Bioengineering									
USR GC Front End Loader			0.00	0.00	3650.00	0.00	0.00	3650.00	
	2.00	MO	0	0	7,300	0	0	7,300	3650.00
USR GC Dozer			0.00	0.00	4500.00	0.00	0.00	4500.00	
	2.00	MO	0	0	9,000	0	0	9,000	4500.00
USR GC Laborer			0.00	23.57	0.00	0.00	0.00	23.57	
	704.00	HR	0	16,593	0	0	0	16,593	23.57
USR GC Operator			0.00	30.52	0.00	0.00	0.00	30.52	
	704.00	HR	0	21,486	0	0	0	21,486	30.52
USR GC Geotextile			0.00	0.00	0.00	0.42	0.00	0.42	
	8409.00	SY	0	0	0	3,532	0	3,532	0.42
USR GC Misc. Daily Material			0.00	0.00	0.00	200.00	0.00	200.00	
	44.00	DA	0	0	0	8,800	0	8,800	200.00
USR GC 3/4" Gravel			0.00	0.00	0.00	16.50	0.00	16.50	
MEANS Site Work and Landscape Cost Data 1999 Stone, 3/4" to 1/2" plus 10 miles transportation, pg 205.	2702.00	CY	0	0	0	44,583	0	44,583	16.50
USR GC Geogrid			0.00	0.00	0.00	0.40	0.00	0.40	
	9948.00	SY	0	0	0	3,979	0	3,979	0.40
USR GC Rip-Rap			0.00	0.00	0.00	17.75	0.00	17.75	
	2211.00	CY	0	0	0	39,245	0	39,245	17.75
USR GC Coir Blanket			0.00	0.00	0.00	1.21	0.00	1.21	
	56740	SY	0	0	0	68,655	0	68,655	1.21
USR GC Seeding			0.00	0.00	0.00	0.00	0.05	0.05	
MEANS Site Work and Landscape Cost Data 1999 Rye fine textured hydro or air seeding pg 71.	75677	SY	0	0	0	0	3,784	3,784	0.05
USR GC Shrubs			0.00	0.00	0.00	0.00	26.67	26.67	
MEANS Site Work and Landscape Cost Data 1999	2211.00	EA	0	0	0	0	58,967	58,967	26.67

62.20. Restoration	QUANTY UOM	MANHRS	LABOR	EQUIPMNT	MATERIAL	SUBCONT	TOTAL COST	UNIT COST
Shrubs, Cornus mas, 2' to 3' pg 160.								
USR GC Trees		0.00	0.00	0.00	0.00	166.00	166.00	
MEANS Site Work and Landscape Cost Data 1999, Populus nigra italica, 20 gal pg 137 Bagged and burlapped, 12" dia. ball backhoe pg 130	3027.00 EA	0	0	0	0	502,482	502,482	166.00
USR GC Vines		0.00	0.00	0.00	0.00	2.49	2.49	
MEANS Site Work and Landscape Cost Data, 1999, Ground covers, vines and climbing plants, pg 175 Planting, plotted, 3' dia. pg 130	466.00 EA	0	0	0	0	1,160	1,160	2.49
TOTAL Bioengineering	199925 SF	0	38,079	16,300	168,795	566,394	789,568	3.95
62.20.30. Hard Structures								
USR GC Front End Loader		0.00	0.00	3650.00	0.00	0.00	3650.00	
	2.00 MO	0	0	7,300	0	0	7,300	3650.00
USR GC Dozer		0.00	0.00	4500.00	0.00	0.00	4500.00	
	2.00 MO	0	0	9,000	0	0	9,000	4500.00
USR GC Laborer		0.00	23.57	0.00	0.00	0.00	23.57	
	704.00 HR	0	16,593	0	0	0	16,593	23.57
USR GC Operator		0.00	30.52	0.00	0.00	0.00	30.52	
	704.00 HR	0	21,486	0	0	0	21,486	30.52
USR GC Geotextile		0.00	0.00	0.00	0.42	0.00	0.42	
	10951 SY	0	0	0	4,599	0	4,599	0.42
USR GC Misc. Daily Material		0.00	0.00	0.00	200.00	0.00	200.00	
	44.00 DA	0	0	0	8,800	0	8,800	200.00
USR GC 3/4" Gravel		0.00	0.00	0.00	16.50	0.00	16.50	
MEANS Site Work and Landscape Cost Data 1999 Stone, 3/4" to 1/2" plus 10 miles transportation, pg 205.	3356.00 CY	0	0	0	55,374	0	55,374	16.50
USR GC 6" dia. PE Perf. Pipe		0.00	0.00	0.00	0.51	0.00	0.51	
	4400.00 LF	0	0	0	2,244	0	2,244	0.51

62.20. Restoration	QUANTY	UOM	MANHRS	LABOR	EQUIPMNT	MATERIAL	SUBCONT	TOTAL COST	UNIT COST
USR GC 6" dia. PE Pipe Cplg.			0.00	0.00	0.00	1.65	0.00	1.65	
	8.00	EA	0	0	0	13	0	13	1.65
USR GC Geogrid			0.00	0.00	0.00	0.40	0.00	0.40	
	22954	SY	0	0	0	9,182	0	9,182	0.40
USR GC Rip-Rap			0.00	0.00	0.00	17.75	0.00	17.75	
	725.00	CY	0	0	0	12,869	0	12,869	17.75
USR GC Coir Blanket			0.00	0.00	0.00	1.21	0.00	1.21	
	3300.00	SY	0	0	0	3,993	0	3,993	1.21
USR GC Concrete Foundation			0.00	0.00	0.00	0.00	168.00	168.00	
MEANS Site Work and Landscape Cost Data 1999 Concrete in place including forms and reinforcing, footings strip, 36" x 12", reinforced pg 207	644.00	CY	0	0	0	0	108,192	108,192	168.00
USR GC Interlock. Segmental Block Wall			0.00	0.00	0.00	0.00	12.05	12.05	
MEANS Site Work and Landscape Cost Data 1999 Retaining walls, segmental wall system, interlocking including installation, pg 59.	68861	SF	0	0	0	0	829,775	829,775	12.05
USR GC Seeding			0.00	0.00	0.00	0.00	0.05	0.05	
MEANS Site Work and Landscape Cost Data 1999 Rye fine textured hydro or air seeding pg 71.	39150	SY	0	0	0	0	1,958	1,958	0.05
USR GC Shrubs			0.00	0.00	0.00	0.00	26.67	26.67	
MEANS Site Work and Landscape Cost Data 1999 Shrubs, Cornus mas, 2' to 3' pg 160.	1263.00	EA	0	0	0	0	33,684	33,684	26.67
USR GC Trees			0.00	0.00	0.00	0.00	166.00	166.00	
MEANS Site Work and Landscape Cost Data 1999, Populus nigra italica, 20 gal pg 137 Bagged and burlapped, 12" dia. ball backhoe pg 130	522.00	EA	0	0	0	0	86,652	86,652	166.00

62.20. Restoration	QUANTY	UOM	MANHRS	LABOR	EQUIPMNT	MATERIAL	SUBCONT	TOTAL COST	UNIT COST
USR GC Vines			0.00	0.00	0.00	0.00	2.49	2.49	
MEANS Site Work and Landscape Cost Data, 1999, Ground covers, vines and climbing plants, pg 175 Planting, plotted, 3' dia. pg 130	612.00	EA	0	0	0	0	1,524	1,524	2.49
TOTAL Hard Structures	29700	SF	0	38,079	16,300	97,074	1061785	1,213,238	40.85
TOTAL Restoration			0	114,238	48,900	399,475	2723919	3,286,532	
TOTAL Restoration of River Bank			0	247,516	244,650	893,083	2723919	4,109,168	
TOTAL GE-Pittsfield EE/CA Alt. #02	1.00	EA	0	2295189	1670780	3518071	6494177	13,978,217	13978217

ALTERNATIVE 3

GE-Pittsfield EE/CA Alt. #03
Roy F. Weston, Inc.

Designed By:
Estimated By: A. Kessler

Prepared By:

Preparation Date: 00/00/00
Effective Date of Pricing: 00/00/00

Sales Tax: 0.00%

This report is not copyrighted, but the information
contained herein is For Official Use Only.

M C A C E S F O R W I N D O W S
Software Copyright (c) 1985-1998
by Building Systems Design, Inc.
Release 1.2c

GE-Pittsfield Alternative No. 3

Dry excavation to meet cleanup criteria. Diversion of flow from the river channel by pumping through a piping bypass along the entire length of EE/CA Reach. Riverbank and riverbed restoration.

See section 5.4 of EE/CA report for written description of activities.

Project Information

Escalation	0.00%
Contingency	25.00%
Engineering and Design	6.00%
USACE Construction Management	8.00%

General Contractor

Contractor Management	10.00%
Field Overhead	6.00%
Office Overhead	15.00%
Profit	5.00%
Bond	0.00%

SUMMARY REPORTS SUMMARY PAGE

PROJECT OWNER SUMMARY - Scope.....1
PROJECT OWNER SUMMARY - Facility.....2
PROJECT INDIRECT SUMMARY - Scope.....4
PROJECT INDIRECT SUMMARY - Facility.....5
PROJECT DIRECT SUMMARY - Scope.....7
PROJECT DIRECT SUMMARY - Facility.....8

DETAILED ESTIMATE DETAIL PAGE

10. Additional Bank Sampling.....1
20. Mobilization
    10. Mobilize Equipment.....2
    20. Setup Temporary Facilities.....3
    30. Install Temporary Fence.....4
    32. Construct Temp. Dewatering Area.....5
    34. Temporary Dewatering Area WTS.....6
    50. Erosion & Sedimentation Control.....8
    60. Clearing.....9
    70. Temporary Access Road.....10
    72. Maint. & Protection of Traffic.....11
    74. Exc. Seepage WTS (equip & matl).....12
    76. Truck Decon Facilities.....13
    90. Demobilization.....14
    92. Pavement Restoration.....15
32. Pumping bypass entire 1.5 miles
    10. Setup & Teardown Pumping System.....16
    15. Setup & Teardown Diversion Dams.....17
    20. Operate and Maintain Bypass Sys.....18
34. Dewatering of river bed
    10. Dewatering of river bed.....19
    20. Setup/Teardown Seepage WTS.....20
    22. O & M of Seepage WTS.....21
40. Excavate & Transport Sed./Soils
    10. Excavate Bed Sediments.....22
    15. ALLOWANCE Down Time Bed Exc.....23
    20. Excavate Bank Soils.....24
    25. ALLOWANCE Down Time Bank Exc.....25
    40. O & M Truck Decon Facilities.....26
42. Dewatering of Excavated Material
    10. Manage Drying Area.....27
    20. O & M WTS.....28
46. Sampling
    20. Characterization Sampling.....30
60. Restoration of River Bed
    10. Import/Place River Bed Backfill.....31
    15. ALLOWANCE Down Time Bed Backfill.....32
62. Restoration of River Bank
    12. Import & Place Fill Material.....33
    15. ALLOWANCE Down Time Bank Backfil.....34
    20. Restoration.....35

DETAILED ESTIMATE DETAIL PAGE

No Backup Reports...

* * * END TABLE OF CONTENTS * * *

** PROJECT OWNER SUMMARY - Scope **

		QUANTITY	UOM	CONTRACT	ESCLATIN	CONTINGN	ENG&DES	CONST MT		TOTAL COST	UNIT COST
10	Additional Bank			577,257	0	144,314	43,294	61,189	0	826,055	
20	Mobilization			2,083,579	0	520,895	156,268	220,859	0	2,981,602	
32	Pumping bypass			3,642,773	0	910,693	273,208	386,134	0	5,212,807	
34	Dewatering of r			999,464	0	249,866	74,960	105,943	0	1,430,233	
40	Excavate & Tran			1,777,165	0	444,291	133,287	188,379	0	2,543,123	
42	Dewatering of E			825,917	0	206,479	61,944	87,547	0	1,181,887	
46	Sampling			328,766	0	82,191	24,657	34,849	0	470,464	
60	Restoration of			1,308,050	0	327,013	98,104	138,653	0	1,871,820	
62	Restoration of			5,751,551	0	1,437,888	431,366	609,664	0	8,230,469	
	GE-Pittsfield E	1.00	EA	17,294,522	0	4,323,631	1,297,089	1,833,219	0	24,748,461	24748461

	QUANTITY UOM	CONTRACT	ESCLATIN	CONTINGN	ENG&DES	CONST MT		TOTAL COST	UNIT COST
10 Additional Bank		577,257	0	144,314	43,294	61,189	0	826,055	
20 Mobilization									
20.10 Mobilize Equ	10.00 EA	4,224	0	1,056	317	448	0	6,044	604.43
20.20 Setup Tempor		101,300	0	25,325	7,597	10,738	0	144,960	
20.30 Install Temp	15000.00 LF	97,782	0	24,445	7,334	10,365	0	139,926	9.33
20.32 Construct Te	12.00 EA	113,753	0	28,438	8,531	12,058	0	162,780	13565.00
20.34 Temporary De		103,176	0	25,794	7,738	10,937	0	147,645	
20.50 Erosion & Se		133,806	0	33,452	10,035	14,183	0	191,476	
20.60 Clearing		106,441	0	26,610	7,983	11,283	0	152,317	
20.70 Temporary Ac		689,745	0	172,436	51,731	73,113	0	987,025	
20.72 Maint. & Pro		310,906	0	77,727	23,318	32,956	0	444,907	
20.74 Exc. Seepage		92,523	0	23,131	6,939	9,807	0	132,401	
20.76 Truck Decon	6.00 EA	48,086	0	12,021	3,606	5,097	0	68,811	11468.43
20.90 Demobilizati		115,588	0	28,897	8,669	12,252	0	165,406	
20.92 Pavement Res	8000.00 SY	166,250	0	41,563	12,469	17,623	0	237,904	29.74
TOTAL Mobilization		2,083,579	0	520,895	156,268	220,859	0	2,981,602	
32 Pumping bypass									
32.10 Setup & Tear		2,253,273	0	563,318	168,995	238,847	0	3,224,434	
32.15 Setup & Tear	5.00 EA	58,630	0	14,658	4,397	6,215	0	83,900	16780.01
32.20 Operate and	18.00 MO	1,330,869	0	332,717	99,815	141,072	0	1,904,474	105804.09
TOTAL Pumping bypa		3,642,773	0	910,693	273,208	386,134	0	5,212,807	
34 Dewatering of r									
34.10 Dewatering o		120,034	0	30,008	9,003	12,724	0	171,769	
34.20 Setup/Teardo		105,161	0	26,290	7,887	11,147	0	150,485	
34.22 O & M of See		774,270	0	193,567	58,070	82,073	0	1,107,980	
TOTAL Dewatering o		999,464	0	249,866	74,960	105,943	0	1,430,233	
40 Excavate & Tran									
40.10 Excavate Bed	43200.00 CY	738,901	0	184,725	55,418	78,323	0	1,057,367	24.48
40.15 ALLOWANCE Do		49,841	0	12,460	3,738	5,283	0	71,323	
40.20 Excavate Ban	46500.00 CY	795,739	0	198,935	59,680	84,348	0	1,138,703	24.49
40.25 ALLOWANCE Do		12,460	0	3,115	935	1,321	0	17,831	
40.40 O & M Truck	89700.00 CY	180,223	0	45,056	13,517	19,104	0	257,900	2.88
TOTAL Excavate & T		1,777,165	0	444,291	133,287	188,379	0	2,543,123	

42 Dewatering of E

** PROJECT OWNER SUMMARY - Facility **

	QUANTITY	UOM	CONTRACT	ESCLATIN	CONTINGN	ENG&DES	CONST MT		TOTAL COST	UNIT COST
42.10 Manage Dryin	18.00	MO	347,702	0	86,926	26,078	36,856	0	497,562	27642.31
42.20 O & M WTS	18.00	MO	478,215	0	119,554	35,866	50,691	0	684,326	38018.09
TOTAL Dewatering o			825,917	0	206,479	61,944	87,547	0	1,181,887	
46 Sampling										
46.20 Characteriza			328,766	0	82,191	24,657	34,849	0	470,464	
TOTAL Sampling			328,766	0	82,191	24,657	34,849	0	470,464	
60 Restoration of										
60.10 Import/Place			1,234,556	0	308,639	92,592	130,863	0	1,766,649	
60.15 ALLOWANCE Do			73,495	0	18,374	5,512	7,790	0	105,171	
TOTAL Restoration			1,308,050	0	327,013	98,104	138,653	0	1,871,820	
62 Restoration of										
62.12 Import & Pla			1,139,852	0	284,963	85,489	120,824	0	1,631,128	
62.15 ALLOWANCE Do			18,374	0	4,593	1,378	1,948	0	26,293	
62.20 Restoration			4,593,325	0	1,148,331	344,499	486,892	0	6,573,048	
TOTAL Restoration			5,751,551	0	1,437,888	431,366	609,664	0	8,230,469	
TOTAL GE-Pittsfiel	1.00	EA	17,294,522	0	4,323,631	1,297,089	1,833,219	0	24,748,461	24748461

** PROJECT INDIRECT SUMMARY - Scope **

	QUANTITY UOM	DIRECT	Contr Mt	Field OH	Home OH	Profit	Bond	TOTAL COST	UNIT COST
10 Additional Bank		410,000	41,000	27,060	71,709	27,488	0	577,257	
20 Mobilization		1,479,873	147,987	97,672	258,830	99,218	0	2,083,579	
32 Pumping bypass		2,587,297	258,730	170,762	452,518	173,465	0	3,642,773	
34 Dewatering of r		709,875	70,987	46,852	124,157	47,594	0	999,464	
40 Excavate & Tran		1,262,240	126,224	83,308	220,766	84,627	0	1,777,165	
42 Dewatering of E		586,612	58,661	38,716	102,598	39,329	0	825,917	
46 Sampling		233,508	23,351	15,411	40,840	15,656	0	328,766	
60 Restoration of		929,049	92,905	61,317	162,491	62,288	0	1,308,050	
62 Restoration of		4,085,068	408,507	269,614	714,478	273,883	0	5,751,551	
GE-Pittsfield E	1.00 EA	12,283,521	1,228,352	810,712	2,148,388	823,549	0	17,294,522	17294522
Contingency								4,323,631	
SUBTOTAL								21,618,153	
Engineering and Design								1,297,089	
SUBTOTAL								22,915,242	
USACE Construction Management								1,833,219	
TOTAL INCL OWNER COSTS								24,748,461	

** PROJECT INDIRECT SUMMARY - Facility **

	QUANTITY UOM	DIRECT	Contr Mt	Field OH	Home OH	Profit	Bond	TOTAL COST	UNIT COST
10 Additional Bank		410,000	41,000	27,060	71,709	27,488	0	577,257	
20 Mobilization									
20.10 Mobilize Equ	10.00 EA	3,000	300	198	525	201	0	4,224	422.38
20.20 Setup Tempor		71,948	7,195	4,749	12,584	4,824	0	101,300	
20.30 Install Temp	15000.00 LF	69,450	6,945	4,584	12,147	4,656	0	97,782	6.52
20.32 Construct Te	12.00 EA	80,793	8,079	5,332	14,131	5,417	0	113,753	9479.38
20.34 Temporary De		73,282	7,328	4,837	12,817	4,913	0	103,176	
20.50 Erosion & Se		95,036	9,504	6,272	16,622	6,372	0	133,806	
20.60 Clearing		75,600	7,560	4,990	13,222	5,069	0	106,441	
20.70 Temporary Ac		489,895	48,990	32,333	85,683	32,845	0	689,745	
20.72 Maint. & Pro		220,823	22,082	14,574	38,622	14,805	0	310,906	
20.74 Exc. Seepage		65,715	6,572	4,337	11,494	4,406	0	92,523	
20.76 Truck Decon	6.00 EA	34,153	3,415	2,254	5,973	2,290	0	48,086	8014.28
20.90 Demobilizati		82,097	8,210	5,418	14,359	5,504	0	115,588	
20.92 Pavement Res	8000.00 SY	118,080	11,808	7,793	20,652	7,917	0	166,250	20.78
TOTAL Mobilization		1,479,873	147,987	97,672	258,830	99,218	0	2,083,579	
32 Pumping bypass									
32.10 Setup & Tear		1,600,399	160,040	105,626	279,910	107,299	0	2,253,273	
32.15 Setup & Tear	5.00 EA	41,643	4,164	2,748	7,283	2,792	0	58,630	11726.07
32.20 Operate and	18.00 MO	945,256	94,526	62,387	165,325	63,375	0	1,330,869	73937.17
TOTAL Pumping bypa		2,587,297	258,730	170,762	452,518	173,465	0	3,642,773	
34 Dewatering of r									
34.10 Dewatering o		85,255	8,525	5,627	14,911	5,716	0	120,034	
34.20 Setup/Teardo		74,691	7,469	4,930	13,063	5,008	0	105,161	
34.22 O & M of See		549,929	54,993	36,295	96,183	36,870	0	774,270	
TOTAL Dewatering o		709,875	70,987	46,852	124,157	47,594	0	999,464	
40 Excavate & Tran									
40.10 Excavate Bed	43200.00 CY	524,808	52,481	34,637	91,789	35,186	0	738,901	17.10
40.15 ALLOWANCE Do		35,400	3,540	2,336	6,191	2,373	0	49,841	
40.20 Excavate Ban	46500.00 CY	565,178	56,518	37,302	98,850	37,892	0	795,739	17.11
40.25 ALLOWANCE Do		8,850	885	584	1,548	593	0	12,460	
40.40 O & M Truck	89700.00 CY	128,005	12,800	8,448	22,388	8,582	0	180,223	2.01
TOTAL Excavate & T		1,262,240	126,224	83,308	220,766	84,627	0	1,777,165	

42 Dewatering of E

** PROJECT INDIRECT SUMMARY - Facility **

	QUANTITY	UOM	DIRECT	Contr Mt	Field OH	Home OH	Profit	Bond	TOTAL COST	UNIT COST
42.10 Manage Dryin	18.00	MO	246,957	24,696	16,299	43,193	16,557	0	347,702	19316.78
42.20 O & M WTS	18.00	MO	339,655	33,965	22,417	59,406	22,772	0	478,215	26567.50
TOTAL Dewatering o			586,612	58,661	38,716	102,598	39,329	0	825,917	
46 Sampling										
46.20 Characteriza			233,508	23,351	15,411	40,840	15,656	0	328,766	
TOTAL Sampling			233,508	23,351	15,411	40,840	15,656	0	328,766	
60 Restoration of										
60.10 Import/Place			876,849	87,685	57,872	153,361	58,788	0	1,234,556	
60.15 ALLOWANCE Do			52,200	5,220	3,445	9,130	3,500	0	73,495	
TOTAL Restoration			929,049	92,905	61,317	162,491	62,288	0	1,308,050	
62 Restoration of										
62.12 Import & Pla			809,586	80,959	53,433	141,597	54,279	0	1,139,852	
62.15 ALLOWANCE Do			13,050	1,305	861	2,282	875	0	18,374	
62.20 Restoration			3,262,432	326,243	215,321	570,599	218,730	0	4,593,325	
TOTAL Restoration			4,085,068	408,507	269,614	714,478	273,883	0	5,751,551	
TOTAL GE-Pittsfiel	1.00	EA	12,283,521	1,228,352	810,712	2,148,388	823,549	0	17,294,522	17294522

Contingency	4,323,631
SUBTOTAL	21,618,153
Engineering and Design	1,297,089
SUBTOTAL	22,915,242
USACE Construction Management	1,833,219
TOTAL INCL OWNER COSTS	24,748,461

** PROJECT DIRECT SUMMARY - Scope **

		QUANTITY	UOM	MANHRS	LABOR	EQUIPMNT	MATERIAL	SUBCONT	TOTAL COST	UNIT COST
10	Additional Bank Sampling			0	0	0	0	410,000	410,000	
20	Mobilization			0	341,343	79,463	230,008	829,060	1,479,873	
32	Pumping bypass entire 1.5 miles			0	348,739	1205525	861,858	171,175	2,587,297	
34	Dewatering of river bed			0	219,413	53,880	339,062	97,520	709,875	
40	Excavate & Transport Sed./Soils			0	369,040	299,200	59,400	534,600	1,262,240	
42	Dewatering of Excavated Material			0	324,091	65,700	149,322	47,499	586,612	
46	Sampling			0	0	0	0	233,508	233,508	
60	Restoration of River Bed			0	123,758	221,850	583,442	0	929,049	
62	Restoration of River Bank			0	247,516	244,650	893,083	2699819	4,085,068	
TOTAL	GE-Pittsfield EE/CA Alt. #03	1.00	EA	0	1973900	2170268	3116174	5023180	12,283,521	12283521
	Contractor Management								1,228,352	
	SUBTOTAL								13,511,873	
	Field Overhead								810,712	
	SUBTOTAL								14,322,586	
	Home Office Overhead								2,148,388	
	SUBTOTAL								16,470,974	
	Profit								823,549	
	TOTAL INCL INDIRECTS								17,294,522	
	Contingency								4,323,631	
	SUBTOTAL								21,618,153	
	Engineering and Design								1,297,089	
	SUBTOTAL								22,915,242	
	USACE Construction Management								1,833,219	
	TOTAL INCL OWNER COSTS								24,748,461	

** PROJECT DIRECT SUMMARY - Facility **

	QUANTITY	UOM	MANHRS	LABOR	EQUIPMNT	MATERIAL	SUBCONT	TOTAL COST	UNIT COST
10 Additional Bank Sampling			0	0	0	0	410,000	410,000	
20 Mobilization									
20.10 Mobilize Equipment	10.00	EA	0	0	0	0	3,000	3,000	300.00
20.20 Setup Temporary Facilities			0	21,498	18,050	6,900	25,500	71,948	
20.30 Install Temporary Fence	15000.00	LF	0	0	0	0	69,450	69,450	4.63
20.32 Construct Temp. Dewatering Area	12.00	EA	0	38,079	24,100	18,614	0	80,793	6732.78
20.34 Temporary Dewatering Area WTS			0	6,786	2,788	63,708	0	73,282	
20.50 Erosion & Sedimentation Control			0	30,774	10,800	25,713	27,750	95,036	
20.60 Clearing			0	0	0	0	75,600	75,600	
20.70 Temporary Access Road			0	0	0	0	489,895	489,895	
20.72 Maint. & Protection of Traffic			0	190,823	0	30,000	0	220,823	
20.74 Exc. Seepage WTS (equip & matl)			0	0	0	65,715	0	65,715	
20.76 Truck Decon Facilities	6.00	EA	0	10,385	1,425	8,058	14,285	34,153	5692.18
20.90 Demobilization			0	42,997	22,300	11,300	5,500	82,097	
20.92 Pavement Restoration	8000.00	SY	0	0	0	0	118,080	118,080	14.76
TOTAL Mobilization			0	341,343	79,463	230,008	829,060	1,479,873	
32 Pumping bypass entire 1.5 miles									
32.10 Setup & Teardown Pumping System			0	21,636	1191588	216,000	171,175	1,600,399	
32.15 Setup & Teardown Diversion Dams	5.00	EA	0	21,636	13,938	6,069	0	41,643	8328.50
32.20 Operate and Maintain Bypass Sys.	18.00	MO	0	305,467	0	639,789	0	945,256	52514.25
TOTAL Pumping bypass entire 1.5 miles			0	348,739	1205525	861,858	171,175	2,587,297	
34 Dewatering of river bed									
34.10 Dewatering of river bed			0	25,963	48,405	10,387	500	85,255	
34.20 Setup/Teardown Seepage WTS			0	40,716	5,475	6,000	22,500	74,691	
34.22 O & M of Seepage WTS			0	152,734	0	322,675	74,520	549,929	
TOTAL Dewatering of river bed			0	219,413	53,880	339,062	97,520	709,875	
40 Excavate & Transport Sed./Soils									
40.10 Excavate Bed Sediments	43200.00	CY	0	123,758	115,050	28,600	257,400	524,808	12.15
40.15 ALLOWANCE Down Time Bed Exc.			0	0	35,400	0	0	35,400	
40.20 Excavate Bank Soils	46500.00	CY	0	133,278	123,900	30,800	277,200	565,178	12.15
40.25 ALLOWANCE Down Time Bank Exc.			0	0	8,850	0	0	8,850	
40.40 O & M Truck Decon Facilities	89700.00	CY	0	112,005	16,000	0	0	128,005	1.43
TOTAL Excavate & Transport Sed./Soils			0	369,040	299,200	59,400	534,600	1,262,240	
42 Dewatering of Excavated Material									

	QUANTITY	UOM	MANHRS	LABOR	EQUIPMNT	MATERIAL	SUBCONT	TOTAL COST	UNIT COST
42.10 Manage Drying Area	18.00	MO	0	171,357	65,700	9,900	0	246,957	13719.84
42.20 O & M WTS	18.00	MO	0	152,734	0	139,422	47,499	339,655	18869.70
TOTAL Dewatering of Excavated Material			0	324,091	65,700	149,322	47,499	586,612	
46 Sampling									
46.20 Characterization Sampling			0	0	0	0	233,508	233,508	
TOTAL Sampling			0	0	0	0	233,508	233,508	
60 Restoration of River Bed									
60.10 Import/Place River Bed Backfill			0	123,758	169,650	583,442	0	876,849	
60.15 ALLOWANCE Down Time Bed Backfill			0	0	52,200	0	0	52,200	
TOTAL Restoration of River Bed			0	123,758	221,850	583,442	0	929,049	
62 Restoration of River Bank									
62.12 Import & Place Fill Material			0	133,278	182,700	493,608	0	809,586	
62.15 ALLOWANCE Down Time Bank Backfil			0	0	13,050	0	0	13,050	
62.20 Restoration			0	114,238	48,900	399,475	2699819	3,262,432	
TOTAL Restoration of River Bank			0	247,516	244,650	893,083	2699819	4,085,068	
TOTAL GE-Pittsfield EE/CA Alt. #03	1.00	EA	0	1973900	2170268	3116174	5023180	12,283,521	12283521

Contractor Management	1,228,352
SUBTOTAL	13,511,873
Field Overhead	810,712
SUBTOTAL	14,322,586
Home Office Overhead	2,148,388
SUBTOTAL	16,470,974
Profit	823,549
TOTAL INCL INDIRECTS	17,294,522
Contingency	4,323,631
SUBTOTAL	21,618,153
Engineering and Design	1,297,089
SUBTOTAL	22,915,242
USACE Construction Management	1,833,219

** PROJECT DIRECT SUMMARY - Facility **

	QUANTITY	UOM	MANHRS	LABOR	EQUIPMNT	MATERIAL	SUBCONT	TOTAL COST	UNIT COST
TOTAL INCL OWNER COSTS								24,748,461	

	QUANTY	UOM	MANHRS	LABOR	EQUIPMNT	MATERIAL	SUBCONT	TOTAL COST	UNIT COST
10. Additional Bank Sampling									
USR GC Additional Bank Sampling @ Depth			0.00	0.00	0.00	0.00	60000	60000.00	
	1.00	LS	0	0	0	0	60,000	60,000	60000.00
USR GC Appendix IX Sampling @ Depth			0.00	0.00	0.00	0.00	100000	100000.00	
	1.00	LS	0	0	0	0	100,000	100,000	100000.00
USR GC Detailed Sampling of River			0.00	0.00	0.00	0.00	100000	100000.00	
	1.00	LS	0	0	0	0	100,000	100,000	100000.00
USR GC Geotech Investigation & Analysis			0.00	0.00	0.00	0.00	150000	150000.00	
	1.00	LS	0	0	0	0	150,000	150,000	150000.00
TOTAL Additional Bank Sampling			0	0	0	0	410,000	410,000	

20.10. Mobilize Equipment	QUANTY	UOM	MANHRS	LABOR	EQUIPMNT	MATERIAL	SUBCONT	TOTAL COST	UNIT COST
20. Mobilization									
20.10. Mobilize Equipment									
Mobilize equipment									
Excavator 2									
Front End Loader 1									
Dozer 2									
Compactor 2									
Trencher 2									
Truck Crane 1									
TOTAL Mobilize Equipment	10.00	EA	0	0	0	0	3,000	3,000	300.00

20.20. Setup Temporary Facilities	QUANTY	UOM	MANHRS	LABOR	EQUIPMNT	MATERIAL	SUBCONT	TOTAL COST	UNIT COST

20.20. Setup Temporary Facilities
Setup Temporary Facilities includes setup of trailers, installation of temporary utilities, install construction entrance, etc.

USR GC Excavator (2)		0.00	0.00	7500.00	0.00	0.00	7500.00	
	1.00 MO	0	0	7,500	0	0	7,500	7500.00
USR GC Front End Loader (monthly)		0.00	0.00	3650.00	0.00	0.00	3650.00	
	1.00 MO	0	0	3,650	0	0	3,650	3650.00
USR GC Office Trailer Rental		0.00	0.00	300.00	0.00	0.00	300.00	
	23.00 MO	0	0	6,900	0	0	6,900	300.00
USR GC Operator		0.00	30.52	0.00	0.00	0.00	30.52	
	352.00 HR	0	10,743	0	0	0	10,743	30.52
USR GC Laborer		0.00	23.57	0.00	0.00	0.00	23.57	
	352.00 HR	0	8,297	0	0	0	8,297	23.57
USR GC Electrician		0.00	30.62	0.00	0.00	0.00	30.62	
	40.00 HR	0	1,225	0	0	0	1,225	30.62
USR GC Pipefitter		0.00	30.85	0.00	0.00	0.00	30.85	
	40.00 HR	0	1,234	0	0	0	1,234	30.85
USR GC Misc. Daily Materials		0.00	0.00	0.00	200.00	0.00	200.00	
	22.00 DA	0	0	0	4,400	0	4,400	200.00
USR GC Misc. Electrical Materials		0.00	0.00	0.00	2500.00	0.00	2500.00	
	1.00 LS	0	0	0	2,500	0	2,500	2500.00
USR GC Misc. Plumbing Materials		0.00	0.00	0.00	0.00	2500.00	2500.00	
	1.00 LS	0	0	0	0	2,500	2,500	2500.00
USR GC Office Trailer Utilities		0.00	0.00	0.00	0.00	1000.00	1000.00	
	23.00 MO	0	0	0	0	23,000	23,000	1000.00
TOTAL Setup Temporary Facilities		0	21,498	18,050	6,900	25,500	71,948	

20.30. Install Temporary Fence	QUANTY	UOM	MANHRS	LABOR	EQUIPMNT	MATERIAL	SUBCONT	TOTAL COST	UNIT COST
20.30. Install Temporary Fence									
MEANS Site Work and Landscape Cost Data 1999									
Install temporary fence pg 118									
USR GC Temporary Fence			0.00	0.00	0.00	0.00	3.38	3.38	
MEANS Site Work and Landscape Cost Data 1999	15000	LF	0	0	0	0	50,700	50,700	3.38
Temporary fence page 118									
USR GC Remove wood fence			0.00	0.00	0.00	0.00	1.25	1.25	
MEANS Site Work and Landscape Cost Data 1999	15000	LF	0	0	0	0	18,750	18,750	1.25
Remove wood fence page 29									
TOTAL Install Temporary Fence	15000	LF	0	0	0	0	69,450	69,450	4.63

20.32. Construct Temp. Dewatering Area	QUANTY	UOM	MANHRS	LABOR	EQUIPMNT	MATERIAL	SUBCONT	TOTAL COST	UNIT COST
20.32. Construct Temp. Dewatering Area Assume 12 areas 40'x 40' each with earthen berms, lined with PVC liner, layer of geotextile, layer of sand and layer of stone, precast concret inlet used as sump.									
USR GC Inlet Grate			0.00	0.00	0.00	214.00	0.00	214.00	
	12.00	EA	0	0	0	2,568	0	2,568	214.00
USR GC Front End Loader (monthly)			0.00	0.00	3650.00	0.00	0.00	3650.00	
	2.00	MO	0	0	7,300	0	0	7,300	3650.00
USR GC Dozer (monthly)			0.00	0.00	4500.00	0.00	0.00	4500.00	
	2.00	MO	0	0	9,000	0	0	9,000	4500.00
USR GC Compactor (monthly)			0.00	0.00	3900.00	0.00	0.00	3900.00	
	2.00	MO	0	0	7,800	0	0	7,800	3900.00
USR GC Operator			0.00	30.52	0.00	0.00	0.00	30.52	
	704.00	HR	0	21,486	0	0	0	21,486	30.52
USR GC Laborer			0.00	23.57	0.00	0.00	0.00	23.57	
	704.00	HR	0	16,593	0	0	0	16,593	23.57
USR GC PVC Liner			0.00	0.00	0.00	0.60	0.00	0.60	
	4300.00	SY	0	0	0	2,580	0	2,580	0.60
USR GC Concrete Inlet 4'dia. 4' deep			0.00	0.00	0.00	315.00	0.00	315.00	
	12.00	EA	0	0	0	3,780	0	3,780	315.00
USR GC Concrete Inlet Cover			0.00	0.00	0.00	148.00	0.00	148.00	
	12.00	EA	0	0	0	1,776	0	1,776	148.00
USR GC 3/4" Gravel			0.00	0.00	0.00	16.50	0.00	16.50	
	240.00	CY	0	0	0	3,960	0	3,960	16.50
USR GC Sand			0.00	0.00	0.00	7.50	0.00	7.50	
	240.00	CY	0	0	0	1,800	0	1,800	7.50
USR GC Fill Material			0.00	0.00	0.00	5.00	0.00	5.00	
	430.00	CY	0	0	0	2,150	0	2,150	5.00
TOTAL Construct Temp. Dewatering Area	12.00	EA	0	38,079	24,100	18,614	0	80,793	6732.78

20.34. Temporary Dewatering Area WTS	QUANTY	UOM	MANHRS	LABOR	EQUIPMNT	MATERIAL	SUBCONT	TOTAL COST	UNIT COST

20.34. Temporary Dewatering Area WTS
Temporary dewatering area water treatment system. One WTS for all dewatering areas.
Assume 100 gpm using (1) modular tank, (4) bag filters, (1) dual carbon unit, submersible pumps and one efffluent pump, PVC pipe and flexible hose.

Assume discharge returns water into river.

USR GC Front End Loader (monthly)			0.00	0.00	3650.00	0.00	0.00	3650.00	
	0.25	MO	0	0	913	0	0	913	3650.00
USR GC Excavator (monthly)			0.00	0.00	7500.00	0.00	0.00	7500.00	
	0.25	MO	0	0	1,875	0	0	1,875	7500.00
USR GC Carbon Units 100 gpm			0.00	0.00	0.00	13217.00	0.00	13217.00	
	1.00	EA	0	0	0	13,217	0	13,217	13217.00
USR GC Bag Filters			0.00	0.00	0.00	919.00	0.00	919.00	
	4.00	EA	0	0	0	3,676	0	3,676	919.00
USR GC ALLOWANCE PVC Pipe			0.00	0.00	0.00	1000.00	0.00	1000.00	
	1.00	LS	0	0	0	1,000	0	1,000	1000.00
USR GC ALLOWANCE Hose			0.00	0.00	0.00	1000.00	0.00	1000.00	
	1.00	LS	0	0	0	1,000	0	1,000	1000.00
USR GC Misc. Daily Materials			0.00	0.00	0.00	200.00	0.00	200.00	
	5.00	DA	0	0	0	1,000	0	1,000	200.00
USR GC Misc. Electrical Materials			0.00	0.00	0.00	7500.00	0.00	7500.00	
	1.00	LS	0	0	0	7,500	0	7,500	7500.00
USR GC Misc. Plumbing Materials			0.00	0.00	0.00	7500.00	0.00	7500.00	
	1.00	LS	0	0	0	7,500	0	7,500	7500.00
USR GC Modular Tank			0.00	0.00	0.00	28815.00	0.00	28815.00	
	1.00	EA	0	0	0	28,815	0	28,815	28815.00
USR GC Electrician			0.00	30.62	0.00	0.00	0.00	30.62	
	40.00	HR	0	1,225	0	0	0	1,225	30.62
USR GC Pipefitter			0.00	30.85	0.00	0.00	0.00	30.85	
	40.00	HR	0	1,234	0	0	0	1,234	30.85
USR GC Laborer			0.00	23.57	0.00	0.00	0.00	23.57	
	80.00	HR	0	1,886	0	0	0	1,886	23.57
USR GC Operator			0.00	30.52	0.00	0.00	0.00	30.52	
	80.00	HR	0	2,442	0	0	0	2,442	30.52

20.34. Temporary Dewatering Area WTS	QUANTY	UOM	MANHRS	LABOR	EQUIPMNT	MATERIAL	SUBCONT	TOTAL COST	UNIT COST
TOTAL Temporary Dewatering Area WTS			0	6,786	2,788	63,708	0	73,282	

20.50. Erosion & Sedimentation Control	QUANTY	UOM	MANHRS	LABOR	EQUIPMNT	MATERIAL	SUBCONT	TOTAL COST	UNIT COST
20.50. Erosion & Sedimentation Control									
20.50.10. Install Silt Fence									
MEANS Site Work and Landscape Cost Data 1999									
Silt Fence Installation pg 58 and Excavating, Utility Trench pg 52									
Trenching $0.54/lf									
Install silt fence $0.88/lf									
Backfill trench $0.43/lf									
TOTAL $1.85/lf									
TOTAL Install Silt Fence	15000	LF	0	0	0	0	27,750	27,750	1.85
20.50.30. Turbidty Barrier									
USR GC Truck Crane			0.00	0.00	5400.00	0.00	0.00	5400.00	
	2.00	MO	0	0	10,800	0	0	10,800	5400.00
USR GC Laborer			0.00	23.57	0.00	0.00	0.00	23.57	
	912.00	HR	0	21,496	0	0	0	21,496	23.57
USR GC Operator			0.00	30.52	0.00	0.00	0.00	30.52	
	304.00	HR	0	9,278	0	0	0	9,278	30.52
USR GC Misc. Daily Materials			0.00	0.00	0.00	200.00	0.00	200.00	
	38.00	DA	0	0	0	7,600	0	7,600	200.00
USR GC Turbidity Barrier			0.00	0.00	0.00	4.83	0.00	4.83	
	3750.00	LF	0	0	0	18,113	0	18,113	4.83
TOTAL Turbidty Barrier			0	30,774	10,800	25,713	0	67,286	
TOTAL Erosion & Sedimentation Control			0	30,774	10,800	25,713	27,750	95,036	

20.60. Clearing	QUANTY	UOM	MANHRS	LABOR	EQUIPMNT	MATERIAL	SUBCONT	TOTAL COST	UNIT COST
20.60. Clearing									
20.60.10. Clearing									
MEANS Site Work and Landscape Cost Data 1999									
Cut & Chip medium, trees to 12" dia. pg 39									
TOTAL Clearing	14.00	AC	0	0	0	0	75,600	75,600	5400.00
TOTAL Clearing			0	0	0	0	75,600	75,600	

20.70. Temporary Access Road	QUANTY	UOM	MANHRS	LABOR	EQUIPMNT	MATERIAL	SUBCONT	TOTAL COST	UNIT COST
20.70. Temporary Access Road									
20.70.10. Construct Temporary Access Road									
MEANS Site Work and Landscape Cost Data 1999									
Roads, gravel fill, no surfacing, 8" depth, pg 15									
Geotextile included in unit price, pg 57									
Temporary Road $5.60 /sy									
Geotextile $1.43 /sy									
Total $7.03 /sy									
TOTAL Construct Temporary Access Road	21700	SY	0	0	0	0	152,551	152,551	7.03
20.70.20. Remove Temporary Access Road									
MEANS Site Work and Landscape Cost Data 1999									
Pavement removal, bituminuous roads, 3" thick, pg 30									
Assume remove during excavation activities.									
TOTAL Remove Temporary Access Road	21700	SY	0	0	0	0	82,894	82,894	3.82
20.70.30. T & D of Access Road Materials									
Access road assumed to be 8" thick and cover 21700 sy									
((21700 sy x 9 sf/sy x 0.67 ft) / 27 cf/cy) x 1.5 tn/cy = 7270 tn									
Assume able to dispose of material as landfill cover.									
Material loaded during removal activity.									
USR GC Trans Landfill Cover			0.00	0.00	0.00	0.00	20.00	20.00	
	7270.00	TN	0	0	0	0	145,400	145,400	20.00
USR GC Disposal Landfill Cover			0.00	0.00	0.00	0.00	15.00	15.00	
	7270.00	TN	0	0	0	0	109,050	109,050	15.00
TOTAL T & D of Access Road Materials			0	0	0	0	254,450	254,450	
TOTAL Temporary Access Road			0	0	0	0	489,895	489,895	

20.72. Maint. & Protection of Traffic	QUANTY	UOM	MANHRS	LABOR	EQUIPMNT	MATERIAL	SUBCONT	TOTAL COST	UNIT COST
20.72. Maint. & Protection of Traffic									
Assume maintenance and protection of traffic full time during excavation and backfill activities, two flagmen full time.									
USR GC Laborer			0.00	23.57	0.00	0.00	0.00	23.57	
	8096.00	HR	0	190,823	0	0	0	190,823	23.57
USR GC Misc. Signage			0.00	0.00	0.00	300.00	0.00	300.00	
	100.00	EA	0	0	0	30,000	0	30,000	300.00
TOTAL Maint. & Protection of Traffic			0	190,823	0	30,000	0	220,823	

20.74. Exc. Seepage WTS (equip & matl)	QUANTY	UOM	MANHRS	LABOR	EQUIPMNT	MATERIAL	SUBCONT	TOTAL COST	UNIT COST

20.74. Exc. Seepage WTS (equip & matl)
WTS for treatment of water seeping in bypassed cells after initial removal of bulk river water. Assume system to be 300 gpm and consist of frak tank, suction pump, bag filters, carbon units and misc. piping and accessories.

Assume setup at each cell along river, 15 setup/teardown events. Setup/teardown included in dewater river bed activity.

USR GC Bag Filters 160 gpm each			0.00	0.00	0.00	1266.00	0.00	1266.00	
	4.00	EA	0	0	0	5,064	0	5,064	1266.00
USR GC Carbon Units 100 gpm parallel			0.00	0.00	0.00	13217.00	0.00	13217.00	
	3.00	EA	0	0	0	39,651	0	39,651	13217.00
USR GC ALLOWANCE PVC Pipe			0.00	0.00	0.00	3000.00	0.00	3000.00	
	1.00	LS	0	0	0	3,000	0	3,000	3000.00
USR GC ALLOWANCE Hose			0.00	0.00	0.00	3000.00	0.00	3000.00	
	1.00	LS	0	0	0	3,000	0	3,000	3000.00
USR GC Misc. Electrical Materials			0.00	0.00	0.00	7500.00	0.00	7500.00	
	1.00	LS	0	0	0	7,500	0	7,500	7500.00
USR GC Misc. Plumbing Materials			0.00	0.00	0.00	7500.00	0.00	7500.00	
	1.00	LS	0	0	0	7,500	0	7,500	7500.00
TOTAL Exc. Seepage WTS (equip & matl)			0	0	0	65,715	0	65,715	

20.76. Truck Decon Facilities	QUANTY	UOM	MANHRS	LABOR	EQUIPMNT	MATERIAL	SUBCONT	TOTAL COST	UNIT COST
20.76. Truck Decon Facilities									
Truck decon facilities includes construction of pads, pads assumed to be asphalt with precast concrete inlet sumps.									
USR GC Backhoe			0.00	0.00	2850.00	0.00	0.00	2850.00	
	0.50	MO	0	0	1,425	0	0	1,425	2850.00
USR GC Laborer			0.00	23.57	0.00	0.00	0.00	23.57	
	192.00	HR	0	4,525	0	0	0	4,525	23.57
USR GC Operator			0.00	30.52	0.00	0.00	0.00	30.52	
	192.00	HR	0	5,860	0	0	0	5,860	30.52
USR GC Concrete Inlet 4' dia. x 4' deep			0.00	0.00	0.00	315.00	0.00	315.00	
	6.00	EA	0	0	0	1,890	0	1,890	315.00
USR GC Concrete Inlet Cover			0.00	0.00	0.00	148.00	0.00	148.00	
	6.00	EA	0	0	0	888	0	888	148.00
USR GC PVC Liner			0.00	0.00	0.00	0.60	0.00	0.60	
	800.00	SY	0	0	0	480	0	480	0.60
USR GC 1000 gal HDPE Tank			0.00	0.00	0.00	800.00	0.00	800.00	
	6.00	EA	0	0	0	4,800	0	4,800	800.00
USR GC Asphalt Pads			0.00	0.00	0.00	0.00	14.76	14.76	
	800.00	SY	0	0	0	0	11,808	11,808	14.76
USR GC Asphalt Curbing			0.00	0.00	0.00	0.00	2.58	2.58	
	960.00	LF	0	0	0	0	2,477	2,477	2.58
TOTAL Truck Decon Facilities	6.00	EA	0	10,385	1,425	8,058	14,285	34,153	5692.18

20.90. Demobilization	QUANTY	UOM	MANHRS	LABOR	EQUIPMNT	MATERIAL	SUBCONT	TOTAL COST	UNIT COST
20.90. Demobilization									
TOTAL Demobilize Equipment	10.00	EA	0	0	0	0	3,000	3,000	300.00
20.90.20. Teardown Temporary Facilities									
Teardown Temporary Facilities include removal of trailers, removal of temporary utilites, removal of construction entrance, etc.									
USR GC Excavator (monthly)			0.00	0.00	7500.00	0.00	0.00	7500.00	
	2.00	MO	0	0	15,000	0	0	15,000	7500.00
USR GC Front End Loader (monthly)			0.00	0.00	3650.00	0.00	0.00	3650.00	
	2.00	MO	0	0	7,300	0	0	7,300	3650.00
USR GC Operator			0.00	30.52	0.00	0.00	0.00	30.52	
	704.00	HR	0	21,486	0	0	0	21,486	30.52
USR GC Laborer			0.00	23.57	0.00	0.00	0.00	23.57	
	704.00	HR	0	16,593	0	0	0	16,593	23.57
USR GC Electrician			0.00	30.62	0.00	0.00	0.00	30.62	
	80.00	HR	0	2,450	0	0	0	2,450	30.62
USR GC Pipefitter			0.00	30.85	0.00	0.00	0.00	30.85	
	80.00	HR	0	2,468	0	0	0	2,468	30.85
USR GC Misc. Daily Materials			0.00	0.00	0.00	200.00	0.00	200.00	
	44.00	DA	0	0	0	8,800	0	8,800	200.00
USR GC Misc. Electrical Materials			0.00	0.00	0.00	2500.00	0.00	2500.00	
	1.00	LS	0	0	0	2,500	0	2,500	2500.00
USR GC Misc. Plumbing Materials			0.00	0.00	0.00	0.00	2500.00	2500.00	
	1.00	LS	0	0	0	0	2,500	2,500	2500.00
TOTAL Teardown Temporary Facilities			0	42,997	22,300	11,300	2,500	79,097	
TOTAL Demobilization			0	42,997	22,300	11,300	5,500	82,097	

20.92. Pavement Restoration	QUANTY	UOM	MANHRS	LABOR	EQUIPMNT	MATERIAL	SUBCONT	TOTAL COST	UNIT COST
20.92. Pavement Restoration									
MEANS Site Work and Landscape Cost Data 1999, pg 71									
TOTAL Pavement Restoration	8000.00	SY	0	0	0	0	118,080	118,080	14.76
TOTAL Mobilization			0	341,343	79,463	230,008	829,060	1,479,873	

32.10. Setup & Teardown Pumping System	QUANTY	UOM	MANHRS	LABOR	EQUIPMNT	MATERIAL	SUBCONT	TOTAL COST	UNIT COST
32. Pumping bypass entire 1.5 miles									
32.10. Setup & Teardown Pumping System									
Assume setup and teardown system five times.									
USR GC Godwin Pump Delivery			0.00	0.00	16150.00	0.00	0.00	16150.00	
	1.00	LS	0	0	16,150	0	0	16,150	16150.00
USR GC Purchase Pumps and Piping			0.00	0.00	1160000	0.00	0.00	1160000.00	
Godwin Quotation dated July 9, 1999.	1.00	LS	0	0	1160000	0	0	1,160,000	1160000
USR GC Diesel Pump Enclosures			0.00	0.00	0.00	18000.00	0.00	18000.00	
	12.00	EA	0	0	0	216,000	0	216,000	18000.00
USR GC Off-Road Crane			0.00	0.00	435.00	0.00	0.00	435.00	
	25.00	DA	0	0	10,875	0	0	10,875	435.00
USR GC Front End Loader			0.00	0.00	3650.00	0.00	0.00	3650.00	
	1.25	MO	0	0	4,563	0	0	4,563	3650.00
USR GC Laborer			0.00	23.57	0.00	0.00	0.00	23.57	
	400.00	HR	0	9,428	0	0	0	9,428	23.57
USR GC Operator			0.00	30.52	0.00	0.00	0.00	30.52	
	400.00	HR	0	12,208	0	0	0	12,208	30.52
USR GC Godwin Pump Setup System			0.00	0.00	0.00	0.00	34235	34235.00	
Includes travel to site, labor, and service truck for assisting in setup of pump and piping system.	5.00	EA	0	0	0	0	171,175	171,175	34235.00
TOTAL Setup & Teardown Pumping System			0	21,636	1191588	216,000	171,175	1,600,399	

32.15. Setup & Teardown Diversion Dams	QUANTY	UOM	MANHRS	LABOR	EQUIPMNT	MATERIAL	SUBCONT	TOTAL COST	UNIT COST
32.15. Setup & Teardown Diversion Dams									
Assume reuse gravel material.									
USR GC Front End Loader			0.00	0.00	3650.00	0.00	0.00	3650.00	
	1.25	MO	0	0	4,563	0	0	4,563	3650.00
USR GC Excavator			0.00	0.00	7500.00	0.00	0.00	7500.00	
	1.25	MO	0	0	9,375	0	0	9,375	7500.00
USR GC Laborer			0.00	23.57	0.00	0.00	0.00	23.57	
	400.00	HR	0	9,428	0	0	0	9,428	23.57
USR GC Operator			0.00	30.52	0.00	0.00	0.00	30.52	
	400.00	HR	0	12,208	0	0	0	12,208	30.52
USR GC PVC Liner			0.00	0.00	0.00	0.60	0.00	0.60	
	2990.00	SY	0	0	0	1,794	0	1,794	0.60
USR GC Rip-Rap			0.00	0.00	0.00	17.75	0.00	17.75	
	100.00	CY	0	0	0	1,775	0	1,775	17.75
USR GC Fill Material			0.00	0.00	0.00	5.00	0.00	5.00	
	500.00	CY	0	0	0	2,500	0	2,500	5.00
TOTAL Setup & Teardown Diversion Dams	5.00	EA	0	21,636	13,938	6,069	0	41,643	8328.50

32.20. Operate and Maintain Bypass Sys.	QUANTY	UOM	MANHRS	LABOR	EQUIPMNT	MATERIAL	SUBCONT	TOTAL COST	UNIT COST
32.20. Operate and Maintain Bypass Sys.									
Assume operate for 18 months.									
USR GC Laborer			0.00	23.57	0.00	0.00	0.00	23.57	
Assume 24 hour/day operation	12960	HR	0	305,467	0	0	0	305,467	23.57
USR GC Fuel			0.00	0.00	0.00	0.65	0.00	0.65	
Assume use off-road vehicle diesel fuel.	970445	GL	0	0	0	630,789	0	630,789	0.65
USR GC Misc. Materials (monthly)			0.00	0.00	0.00	500.00	0.00	500.00	
	18.00	MO	0	0	0	9,000	0	9,000	500.00
TOTAL Operate and Maintain Bypass Sys.	18.00	MO	0	305,467	0	639,789	0	945,256	52514.25
TOTAL Pumping bypass entire 1.5 miles			0	348,739	1205525	861,858	171,175	2,587,297	

34.10. Dewatering of river bed	QUANTY	UOM	MANHRS	LABOR	EQUIPMNT	MATERIAL	SUBCONT	TOTAL COST	UNIT COST

34. Dewatering of river bed
Dewater bypassed cells. System on-site full time for duration of project.

Assume 15 cells @ 500 ft/cell, two days per move

Assume excavation to be 18 months.
34.10. Dewatering of river bed

34.10.10. Setup, Maintain, & Teardown

USR GC Front End Loader (monthly)			0.00	0.00	3650.00	0.00	0.00	3650.00	
	1.50	MO	0	0	5,475	0	0	5,475	3650.00
USR GC Godwin 8" Diesel Pump			0.00	0.00	2385.00	0.00	0.00	2385.00	
	18.00	MO	0	0	42,930	0	0	42,930	2385.00
USR GC Godwin Suction Hose 10 ft sect.			0.00	0.00	0.00	1413.00	0.00	1413.00	
	2.00	EA	0	0	0	2,826	0	2,826	1413.00
USR GC Godwin Discharge Hose $/lf			0.00	0.00	0.00	8.30	0.00	8.30	
	400.00	LF	0	0	0	3,320	0	3,320	8.30
USR GC Godwin Equipment Delivery'			0.00	0.00	0.00	0.00	250.00	250.00	
	2.00	EA	0	0	0	0	500	500	250.00
USR GC Laborer			0.00	23.57	0.00	0.00	0.00	23.57	
	480.00	HR	0	11,314	0	0	0	11,314	23.57
USR GC Operator			0.00	30.52	0.00	0.00	0.00	30.52	
	480.00	HR	0	14,650	0	0	0	14,650	30.52
USR GC 3/4" Gravel			0.00	0.00	0.00	16.50	0.00	16.50	
	257.00	CY	0	0	0	4,241	0	4,241	16.50
TOTAL Setup, Maintain, & Teardown	40.00	MO	0	25,963	48,405	10,387	500	85,255	2131.37
TOTAL Dewatering of river bed			0	25,963	48,405	10,387	500	85,255	

34.20. Setup/Teardown Seepage WTS	QUANTY	UOM	MANHRS	LABOR	EQUIPMNT	MATERIAL	SUBCONT	TOTAL COST	UNIT COST
34.20. Setup/Teardown Seepage WTS									
Assume 15 setup/teardown events, two days each, total 30 days.									
USR GC Front End Loader (monthly)			0.00	0.00	3650.00	0.00	0.00	3650.00	
	1.50	MO	0	0	5,475	0	0	5,475	3650.00
USR GC Misc. Daily Materials			0.00	0.00	0.00	200.00	0.00	200.00	
	30.00	DA	0	0	0	6,000	0	6,000	200.00
USR GC Laborer			0.00	23.57	0.00	0.00	0.00	23.57	
	480.00	HR	0	11,314	0	0	0	11,314	23.57
USR GC Operator			0.00	30.52	0.00	0.00	0.00	30.52	
	480.00	HR	0	14,650	0	0	0	14,650	30.52
USR GC Electrician			0.00	30.62	0.00	0.00	0.00	30.62	
	240.00	HR	0	7,349	0	0	0	7,349	30.62
USR GC Pipefitter			0.00	30.85	0.00	0.00	0.00	30.85	
	240.00	HR	0	7,404	0	0	0	7,404	30.85
USR GC Truck w/ Flatbed Trailer			0.00	0.00	0.00	0.00	750.00	750.00	
	30.00	DA	0	0	0	0	22,500	22,500	750.00
TOTAL Setup/Teardown Seepage WTS			0	40,716	5,475	6,000	22,500	74,691	

34.22. O & M of Seepage WTS	QUANTY	UOM	MANHRS	LABOR	EQUIPMNT	MATERIAL	SUBCONT	TOTAL COST	UNIT COST
34.22. O & M of Seepage WTS									
Electricity - ALLOWANCE $/mo assume $1500/mo									
Carbon - Assume one change per month 1760 # x 6 units x 18 months = 190080#									
Bag Filter Bags - Assume 2 bags per filter per day x 4 filters x 1 shift x 1.5 years 365 days/yr = 4380 bags.									
USR GC Frank Tank 21,000 gal (monthly)			0.00	0.00	0.00	1100.00	0.00	1100.00	
	54.00	MO	0	0	0	59,400	0	59,400	1100.00
USR GC Laborer			0.00	23.57	0.00	0.00	0.00	23.57	
Assume operation 12 hours per day.	6480.00	HR	0	152,734	0	0	0	152,734	23.57
Operates pumping system and seepage WTS.									
USR GC Carbon Replacement			0.00	0.00	0.00	1.28	0.00	1.28	
	190080	LB	0	0	0	243,302	0	243,302	1.28
USR GC Bag Filter Bags			0.00	0.00	0.00	4.56	0.00	4.56	
	4380.00	EA	0	0	0	19,973	0	19,973	4.56
USR GC ALLOWANCE Elec Svs for WTS #2			0.00	0.00	0.00	0.00	1500.00	1500.00	
	18.00	MO	0	0	0	0	27,000	27,000	1500.00
USR GC Spent Carbon Removal & Disposal			0.00	0.00	0.00	0.00	0.25	0.25	
	190080	LB	0	0	0	0	47,520	47,520	0.25
TOTAL O & M of Seepage WTS			0	152,734	0	322,675	74,520	549,929	
TOTAL Dewatering of river bed			0	219,413	53,880	339,062	97,520	709,875	

40.10. Excavate Bed Sediments	QUANTY	UOM	MANHRS	LABOR	EQUIPMNT	MATERIAL	SUBCONT	TOTAL COST	UNIT COST
40. Excavate & Transport Sed./Soils									
40.10. Excavate Bed Sediments									
Estimated duration to excavate 43,200 cy based on 300 cy per day = 6.5 months.									
USR GC Excavator (monthly)			0.00	0.00	7500.00	0.00	0.00	7500.00	
	6.50	MO	0	0	48,750	0	0	48,750	7500.00
USR GC Dump Truck (3)			0.00	0.00	0.00	0.00	75.00	75.00	
	3432.00	HR	0	0	0	0	257,400	257,400	75.00
USR GC Excavator, Long Reach (monthly)			0.00	0.00	10200.00	0.00	0.00	10200.00	
	6.50	MO	0	0	66,300	0	0	66,300	10200.00
USR GC Operator			0.00	30.52	0.00	0.00	0.00	30.52	
	2288.00	HR	0	69,830	0	0	0	69,830	30.52
USR GC Laborer			0.00	23.57	0.00	0.00	0.00	23.57	
	2288.00	HR	0	53,928	0	0	0	53,928	23.57
USR GC Misc. Daily Materials			0.00	0.00	0.00	200.00	0.00	200.00	
	143.00	DA	0	0	0	28,600	0	28,600	200.00
TOTAL Excavate Bed Sediments	43200	CY	0	123,758	115,050	28,600	257,400	524,808	12.15

40.15. ALLOWANCE Down Time Bed Exc.	QUANTY	UOM	MANHRS	LABOR	EQUIPMNT	MATERIAL	SUBCONT	TOTAL COST	UNIT COST
40.15. ALLOWANCE Down Time Bed Exc.									
Assume down time 6.5 months x 30% = 1.95 months, say 2 months.									
USR GC Excavator (monthly)			0.00	0.00	7500.00	0.00	0.00	7500.00	
	2.00	MO	0	0	15,000	0	0	15,000	7500.00
USR GC Excavator, Long Reach (monthly)			0.00	0.00	10200.00	0.00	0.00	10200.00	
	2.00	MO	0	0	20,400	0	0	20,400	10200.00
TOTAL ALLOWANCE Down Time Bed Exc.			0	0	35,400	0	0	35,400	

40.20. Excavate Bank Soils	QUANTY	UOM	MANHRS	LABOR	EQUIPMNT	MATERIAL	SUBCONT	TOTAL COST	UNIT COST
40.20. Excavate Bank Soils									
Estimated duration to excavate and backfill 46,500 cy based on 300 cy per day = 7.0 months.									
USR GC Excavator (monthly)			0.00	0.00	7500.00	0.00	0.00	7500.00	
	7.00	MO	0	0	52,500	0	0	52,500	7500.00
USR GC Dump Truck (3)			0.00	0.00	0.00	0.00	75.00	75.00	
	3696.00	HR	0	0	0	0	277,200	277,200	75.00
USR GC Excavator, Long Reach (monthly)			0.00	0.00	10200.00	0.00	0.00	10200.00	
	7.00	MO	0	0	71,400	0	0	71,400	10200.00
USR GC Operator			0.00	30.52	0.00	0.00	0.00	30.52	
	2464.00	HR	0	75,201	0	0	0	75,201	30.52
USR GC Laborer			0.00	23.57	0.00	0.00	0.00	23.57	
	2464.00	HR	0	58,076	0	0	0	58,076	23.57
USR GC Misc. Daily Materials			0.00	0.00	0.00	200.00	0.00	200.00	
	154.00	DA	0	0	0	30,800	0	30,800	200.00
TOTAL Excavate Bank Soils	46500	CY	0	133,278	123,900	30,800	277,200	565,178	12.15

40.25. ALLOWANCE Down Time Bank Exc.	QUANTY	UOM	MANHRS	LABOR	EQUIPMNT	MATERIAL	SUBCONT	TOTAL COST	UNIT COST
40.25. ALLOWANCE Down Time Bank Exc.									
Assume down time 7 months x 5% = 0.35 months, say 0.5 months.									
USR GC Excavator (monthly)			0.00	0.00	7500.00	0.00	0.00	7500.00	
	0.50	MO	0	0	3,750	0	0	3,750	7500.00
USR GC Excavator, Long Reach (monthly)			0.00	0.00	10200.00	0.00	0.00	10200.00	
	0.50	MO	0	0	5,100	0	0	5,100	10200.00
TOTAL ALLOWANCE Down Time Bank Exc.			0	0	8,850	0	0	8,850	

40.40. O & M Truck Decon Facilities	QUANTY	UOM	MANHRS	LABOR	EQUIPMNT	MATERIAL	SUBCONT	TOTAL COST	UNIT COST
40.40. O & M Truck Decon Facilities									
USR GC Pressure Washer			0.00	0.00	3000.00	0.00	0.00	3000.00	
	2.00	EA	0	0	6,000	0	0	6,000	3000.00
USR GC Trash Pump w/ Suct. & Disch. Hse			0.00	0.00	5000.00	0.00	0.00	5000.00	
	2.00	EA	0	0	10,000	0	0	10,000	5000.00
USR GC Laborer			0.00	23.57	0.00	0.00	0.00	23.57	
	4752.00	HR	0	112,005	0	0	0	112,005	23.57
TOTAL O & M Truck Decon Facilities	89700	CY	0	112,005	16,000	0	0	128,005	1.43
TOTAL Excavate & Transport Sed./Soils			0	369,040	299,200	59,400	534,600	1,262,240	

42.10. Manage Drying Area	QUANTY	UOM	MANHRS	LABOR	EQUIPMNT	MATERIAL	SUBCONT	TOTAL COST	UNIT COST
42. Dewatering of Excavated Material									
42.10. Manage Drying Area									
USR GC Front End Loader (monthly)			0.00	0.00	3650.00	0.00	0.00	3650.00	
	18.00	MO	0	0	65,700	0	0	65,700	3650.00
USR GC Operator			0.00	30.52	0.00	0.00	0.00	30.52	
	3168.00	HR	0	96,687	0	0	0	96,687	30.52
USR GC Laborer			0.00	23.57	0.00	0.00	0.00	23.57	
	3168.00	HR	0	74,670	0	0	0	74,670	23.57
USR GC Silt Sack			0.00	0.00	0.00	25.00	0.00	25.00	
	396.00	EA	0	0	0	9,900	0	9,900	25.00
TOTAL Manage Drying Area	18.00	MO	0	171,357	65,700	9,900	0	246,957	13719.84

42.20. O & M WTS	QUANTY	UOM	MANHRS	LABOR	EQUIPMNT	MATERIAL	SUBCONT	TOTAL COST	UNIT COST

42.20. O & M WTS
Operation and Maintenance of water treatment system
Electricity - ALLOWANCE $/mo assume $500/mo

Carbon - Assume one change per month 1760# x 2 units x 18 months = 63360#

Bag Filter Bags - Assume 2 bags per filter per shift x 4 filters x 1 shifts
per day x 1.5 years x 365 days per year = 4380 bags

Assume weekly sampling

USR GC Laborer			0.00	23.57	0.00	0.00	0.00	23.57	
Assume operation 12 hours per day.	6480.00	HR	0	152,734	0	0	0	152,734	23.57
USR GC Carbon Replacement			0.00	0.00	0.00	2.00	0.00	2.00	
	63360	LB	0	0	0	126,720	0	126,720	2.00
USR GC Bag Filter Bags			0.00	0.00	0.00	2.90	0.00	2.90	
	4380.00	EA	0	0	0	12,702	0	12,702	2.90
USR GC ALLOWANCE Elec Svc for WTS			0.00	0.00	0.00	0.00	500.00	500.00	
	18.00	MO	0	0	0	0	9,000	9,000	500.00
USR GC Spent Carbon Removal & Disposal			0.00	0.00	0.00	0.00	0.25	0.25	
	63360	LB	0	0	0	0	15,840	15,840	0.25
USR GC Anal. TSS			0.00	0.00	0.00	0.00	30.00	30.00	
	78.00	EA	0	0	0	0	2,340	2,340	30.00
USR GC Anal. O & G			0.00	0.00	0.00	0.00	30.00	30.00	
	78.00	EA	0	0	0	0	2,340	2,340	30.00
USR GC Anal. Phenol			0.00	0.00	0.00	0.00	30.00	30.00	
	78.00	EA	0	0	0	0	2,340	2,340	30.00
USR GC Anal. Settable Solids			0.00	0.00	0.00	0.00	30.00	30.00	
	78.00	EA	0	0	0	0	2,340	2,340	30.00
USR GC Anal. PCBs			0.00	0.00	0.00	0.00	132.50	132.50	
	78.00	EA	0	0	0	0	10,335	10,335	132.50
USR GC Anal. Iron (total)			0.00	0.00	0.00	0.00	30.00	30.00	
	78.00	EA	0	0	0	0	2,340	2,340	30.00
USR GC Anal. pH			0.00	0.00	0.00	0.00	8.00	8.00	
	78.00	EA	0	0	0	0	624	624	8.00
USR GC Anal. Temp. (field measurement)			0.00	0.00	0.00	0.00	0.00	0.00	
	78.00	EA	0	0	0	0	0	0	0.00

42.20. O & M WTS	QUANTY	UOM	MANHRS	LABOR	EQUIPMNT	MATERIAL	SUBCONT	TOTAL COST	UNIT COST
TOTAL O & M WTS	18.00	MO	0	152,734	0	139,422	47,499	339,655	18869.70
TOTAL Dewatering of Excavated Material			0	324,091	65,700	149,322	47,499	586,612	

46.20. Characterization Sampling	QUANTY	UOM	MANHRS	LABOR	EQUIPMNT	MATERIAL	SUBCONT	TOTAL COST	UNIT COST
46. Sampling									
46.20. Characterization Sampling									
USR GC PCB Analysis (1/150 tn)			0.00	0.00	0.00	0.00	132.50	132.50	
	885.00	EA	0	0	0	0	117,263	117,263	132.50
USR GC TCLP Analysis (1/2000 tn)			0.00	0.00	0.00	0.00	1095.00	1095.00	
	67.00	EA	0	0	0	0	73,365	73,365	1095.00
USR GC Dioxin Analysis (1/2000 tn)			0.00	0.00	0.00	0.00	400.00	400.00	
	67.00	EA	0	0	0	0	26,800	26,800	400.00
USR GC RCRA Characteristics (1/2000 tn)			0.00	0.00	0.00	0.00	215.00	215.00	
	67.00	EA	0	0	0	0	14,405	14,405	215.00
USR GC pH (1/2000 tn)			0.00	0.00	0.00	0.00	15.00	15.00	
	67.00	EA	0	0	0	0	1,005	1,005	15.00
USR GC Moisture Content (1/2000 tn)			0.00	0.00	0.00	0.00	10.00	10.00	
	67.00	EA	0	0	0	0	670	670	10.00
TOTAL Characterization Sampling			0	0	0	0	233,508	233,508	
TOTAL Sampling			0	0	0	0	233,508	233,508	

60.10. Import/Place River Bed Backfill	QUANTY	UOM	MANHRS	LABOR	EQUIPMNT	MATERIAL	SUBCONT	TOTAL COST	UNIT COST
60. Restoration of River Bed									
60.10. Import/Place River Bed Backfill									
USR GC Dozer (monthly)			0.00	0.00	4500.00	0.00	0.00	4500.00	
	6.50	MO	0	0	29,250	0	0	29,250	4500.00
USR GC Compactor (monthly)			0.00	0.00	3900.00	0.00	0.00	3900.00	
	6.50	MO	0	0	25,350	0	0	25,350	3900.00
USR GC Excavator (monthly)			0.00	0.00	7500.00	0.00	0.00	7500.00	
	6.50	MO	0	0	48,750	0	0	48,750	7500.00
USR GC Excavator, Long Reach (monthly)			0.00	0.00	10200.00	0.00	0.00	10200.00	
	6.50	MO	0	0	66,300	0	0	66,300	10200.00
USR GC Laborer			0.00	23.57	0.00	0.00	0.00	23.57	
	2288.00	HR	0	53,928	0	0	0	53,928	23.57
USR GC Operator			0.00	30.52	0.00	0.00	0.00	30.52	
	2288.00	HR	0	69,830	0	0	0	69,830	30.52
USR GC Misc. Daily Expenses			0.00	0.00	0.00	200.00	0.00	200.00	
	143.00	DA	0	0	0	28,600	0	28,600	200.00
USR GC Fill Material			0.00	0.00	0.00	5.00	0.00	5.00	
	7586.00	CY	0	0	0	37,930	0	37,930	5.00
USR GC 3/4" Gravel			0.00	0.00	0.00	16.50	0.00	16.50	
MEANS Site Work and Landscape Cost Data 1999 stone, 3/4" to 1/2" plus 10 miles transportation, pg 205	7444.00	CY	0	0	0	122,826	0	122,826	16.50
USR GC Rip-Rap			0.00	0.00	0.00	17.75	0.00	17.75	
MEANS Site Work and Landscape Cost Data 1999 Rip-Rap, random broken stone pg 60	22202	CY	0	0	0	394,086	0	394,086	17.75
TOTAL Import/Place River Bed Backfill			0	123,758	169,650	583,442	0	876,849	

60.15. ALLOWANCE Down Time Bed Backfill	QUANTY	UOM	MANHRS	LABOR	EQUIPMNT	MATERIAL	SUBCONT	TOTAL COST	UNIT COST
60.15. ALLOWANCE Down Time Bed Backfill									
Assume down time 6.5 months x 30% = 1.95 months, say 2 months.									
USR GC Dozer (monthly)			0.00	0.00	4500.00	0.00	0.00	4500.00	
	2.00	MO	0	0	9,000	0	0	9,000	4500.00
USR GC Compactor (monthly)			0.00	0.00	3900.00	0.00	0.00	3900.00	
	2.00	MO	0	0	7,800	0	0	7,800	3900.00
USR GC Excavator (monthly)			0.00	0.00	7500.00	0.00	0.00	7500.00	
	2.00	MO	0	0	15,000	0	0	15,000	7500.00
USR GC Excavator, Long Reach (monthly)			0.00	0.00	10200.00	0.00	0.00	10200.00	
	2.00	MO	0	0	20,400	0	0	20,400	10200.00
TOTAL ALLOWANCE Down Time Bed Backfill			0	0	52,200	0	0	52,200	
TOTAL Restoration of River Bed			0	123,758	221,850	583,442	0	929,049	

62.12. Import & Place Fill Material	QUANTY	UOM	MANHRS	LABOR	EQUIPMNT	MATERIAL	SUBCONT	TOTAL COST	UNIT COST
62. Restoration of River Bank									
62.12. Import & Place Fill Material									
USR GC Dozer (monthly)			0.00	0.00	4500.00	0.00	0.00	4500.00	
	7.00	MO	0	0	31,500	0	0	31,500	4500.00
USR GC Compactor (monthly)			0.00	0.00	3900.00	0.00	0.00	3900.00	
	7.00	MO	0	0	27,300	0	0	27,300	3900.00
USR GC Excavator (monthly)			0.00	0.00	7500.00	0.00	0.00	7500.00	
	7.00	MO	0	0	52,500	0	0	52,500	7500.00
USR GC Excavator, Long Reach (monthly)			0.00	0.00	10200.00	0.00	0.00	10200.00	
	7.00	MO	0	0	71,400	0	0	71,400	10200.00
USR GC Laborer			0.00	23.57	0.00	0.00	0.00	23.57	
	2464.00	HR	0	58,076	0	0	0	58,076	23.57
USR GC Operator			0.00	30.52	0.00	0.00	0.00	30.52	
	2464.00	HR	0	75,201	0	0	0	75,201	30.52
USR GC Misc. Daily Expenses			0.00	0.00	0.00	200.00	0.00	200.00	
	154.00	DA	0	0	0	30,800	0	30,800	200.00
USR GC Fill Material			0.00	0.00	0.00	5.00	0.00	5.00	
	32406	CY	0	0	0	162,030	0	162,030	5.00
USR GC 3/4" Gravel			0.00	0.00	0.00	16.50	0.00	16.50	
MEANS Site Work and Landscape Cost Data 1999 stone, 3/4" to 1/2" plus 10 miles transportation, pg 205	4413.00	CY	0	0	0	72,815	0	72,815	16.50
USR GC Rip-Rap			0.00	0.00	0.00	17.75	0.00	17.75	
MEANS Site Work and Landscape Cost Data 1999 Rip-Rap, random broken stone pg 60	12843	CY	0	0	0	227,963	0	227,963	17.75
TOTAL Import & Place Fill Material			0	133,278	182,700	493,608	0	809,586	

62.15. ALLOWANCE Down Time Bank Backfil	QUANTY	UOM	MANHRS	LABOR	EQUIPMNT	MATERIAL	SUBCONT	TOTAL COST	UNIT COST
62.15. ALLOWANCE Down Time Bank Backfil									
Assume 5% down time x 7 months = 0.35 months, say 0.5 months.									
USR GC Dozer (monthly)			0.00	0.00	4500.00	0.00	0.00	4500.00	
	0.50	MO	0	0	2,250	0	0	2,250	4500.00
USR GC Compactor (monthly)			0.00	0.00	3900.00	0.00	0.00	3900.00	
	0.50	MO	0	0	1,950	0	0	1,950	3900.00
USR GC Excavator (monthly)			0.00	0.00	7500.00	0.00	0.00	7500.00	
	0.50	MO	0	0	3,750	0	0	3,750	7500.00
USR GC Excavator, Long Reach (monthly)			0.00	0.00	10200.00	0.00	0.00	10200.00	
	0.50	MO	0	0	5,100	0	0	5,100	10200.00
TOTAL ALLOWANCE Down Time Bank Backfil			0	0	13,050	0	0	13,050	

62.20. Restoration	QUANTY	UOM	MANHRS	LABOR	EQUIPMNT	MATERIAL	SUBCONT	TOTAL COST	UNIT COST
62.20. Restoration									
62.20.10. Revegetation									
USR GC Front End Loader			0.00	0.00	3650.00	0.00	0.00	3650.00	
	2.00	MO	0	0	7,300	0	0	7,300	3650.00
USR GC Dozer			0.00	0.00	4500.00	0.00	0.00	4500.00	
	2.00	MO	0	0	9,000	0	0	9,000	4500.00
USR GC Laborer			0.00	23.57	0.00	0.00	0.00	23.57	
	704.00	HR	0	16,593	0	0	0	16,593	23.57
USR GC Operator			0.00	30.52	0.00	0.00	0.00	30.52	
	704.00	HR	0	21,486	0	0	0	21,486	30.52
USR GC Geotextile			0.00	0.00	0.00	0.42	0.00	0.42	
	47886	SY	0	0	0	20,112	0	20,112	0.42
USR GC Coir Blanket			0.00	0.00	0.00	1.21	0.00	1.21	
	5986.00	SY	0	0	0	7,243	0	7,243	1.21
USR GC Rip-Rap			0.00	0.00	0.00	17.75	0.00	17.75	
	5986.00	CY	0	0	0	106,252	0	106,252	17.75
USR GC Seeding			0.00	0.00	0.00	0.00	0.05	0.05	
MEANS Site Work and Landscape Cost Data 1999 Rye fine textured hydro or air seeding pg 127	153648	SF	0	0	0	0	7,682	7,682	0.05
USR GC Shrubs			0.00	0.00	0.00	0.00	26.67	26.67	
MEANS Site Work and Landscape Cost Data 1999 Shrubs, Cornus mas, 2' to 3', pg 160 Planting, potted heavy or stoney soil, pg 130	2449.00	EA	0	0	0	0	65,315	65,315	26.67
USR GC Trees			0.00	0.00	0.00	0.00	166.00	166.00	
MEANS Site Work and Landscape Cost Data 1999 Populus nigra italica, 20 gal pg 137 Bagged and burlapped, 12" dia. ball, backhoe pg 130	6146.00	EA	0	0	0	0	1020236	1,020,236	166.00
USR GC Vines			0.00	0.00	0.00	0.00	2.49	2.49	
MEANS Site Work and Landscape Cost Data 1999 Ground covers, vines and	1007.00	EA	0	0	0	0	2,507	2,507	2.49

62.20. Restoration	QUANTY	UOM	MANHRS	LABOR	EQUIPMNT	MATERIAL	SUBCONT	TOTAL COST	UNIT COST
climbing plants, pg 175 Planting, plotted, 3" dia. pg 130									
TOTAL Revegetation	22750	SF	0	38,079	16,300	133,607	1095741	1,283,727	56.43
62.20.20. Bioengineering									
USR GC Front End Loader			0.00	0.00	3650.00	0.00	0.00	3650.00	
	2.00	MO	0	0	7,300	0	0	7,300	3650.00
USR GC Dozer			0.00	0.00	4500.00	0.00	0.00	4500.00	
	2.00	MO	0	0	9,000	0	0	9,000	4500.00
USR GC Laborer			0.00	23.57	0.00	0.00	0.00	23.57	
	704.00	HR	0	16,593	0	0	0	16,593	23.57
USR GC Operator			0.00	30.52	0.00	0.00	0.00	30.52	
	704.00	HR	0	21,486	0	0	0	21,486	30.52
USR GC Geotextile			0.00	0.00	0.00	0.42	0.00	0.42	
	8409.00	SY	0	0	0	3,532	0	3,532	0.42
USR GC Misc. Daily Material			0.00	0.00	0.00	200.00	0.00	200.00	
	44.00	DA	0	0	0	8,800	0	8,800	200.00
USR GC 3/4" Gravel			0.00	0.00	0.00	16.50	0.00	16.50	
MEANS Site Work and Landscape Cost Data 1999 Stone, 3/4" to 1/2" plus 10 miles transportation, pg 205.	2702.00	CY	0	0	0	44,583	0	44,583	16.50
USR GC Geogrid			0.00	0.00	0.00	0.40	0.00	0.40	
	9948.00	SY	0	0	0	3,979	0	3,979	0.40
USR GC Rip-Rap			0.00	0.00	0.00	17.75	0.00	17.75	
	2211.00	CY	0	0	0	39,245	0	39,245	17.75
USR GC Coir Blanket			0.00	0.00	0.00	1.21	0.00	1.21	
	56740	SY	0	0	0	68,655	0	68,655	1.21
USR GC Seeding			0.00	0.00	0.00	0.00	0.05	0.05	
MEANS Site Work and Landscape Cost Data 1999 Rye fine tectured hyrdor or air seeding pg 71.	75677	SF	0	0	0	0	3,784	3,784	0.05
USR GC Shrubs			0.00	0.00	0.00	0.00	26.67	26.67	
MEANS Site Work and Landscape Cost Data 1999	2211.00	EA	0	0	0	0	58,967	58,967	26.67

62.20. Restoration	QUANTY UOM	MANHRS	LABOR	EQUIPMNT	MATERIAL	SUBCONT	TOTAL COST	UNIT COST
Shrubs, Cornus mas, 2' to 3' pg 160.								
USR GC Trees		0.00	0.00	0.00	0.00	166.00	166.00	
MEANS Site Work and Landscape Cost Data 1999, Populus nigra italica, 20 gal pg 137 Bagged and burlapped, 12" dia. ball backhoe pg 130	3027.00 EA	0	0	0	0	502,482	502,482	166.00
USR GC Vines		0.00	0.00	0.00	0.00	2.49	2.49	
MEANS Site Work and Landscape Cost Data 1999, Ground covers, vines and climbing plants, pg 175 Planting, plotted 3' dia. pg 130	466.00 EA	0	0	0	0	1,160	1,160	2.49
TOTAL Bioengineering	199925 SF	0	38,079	16,300	168,795	566,394	789,568	3.95
62.20.30. Hard Structures								
USR GC Front End Loader		0.00	0.00	3650.00	0.00	0.00	3650.00	
	2.00 MO	0	0	7,300	0	0	7,300	3650.00
USR GC Dozer		0.00	0.00	4500.00	0.00	0.00	4500.00	
	2.00 MO	0	0	9,000	0	0	9,000	4500.00
USR GC Laborer		0.00	23.57	0.00	0.00	0.00	23.57	
	704.00 HR	0	16,593	0	0	0	16,593	23.57
USR GC Operator		0.00	30.52	0.00	0.00	0.00	30.52	
	704.00 HR	0	21,486	0	0	0	21,486	30.52
USR GC Geotextile		0.00	0.00	0.00	0.42	0.00	0.42	
	10951 SY	0	0	0	4,599	0	4,599	0.42
USR GC Misc. Daily Material		0.00	0.00	0.00	200.00	0.00	200.00	
	44.00 DA	0	0	0	8,800	0	8,800	200.00
USR GC 3/4" Gravel		0.00	0.00	0.00	16.50	0.00	16.50	
MEANS Site Work and Landscape Cost Data 1999 Stone, 3/4" to 1/2" plus 10 miles transportation, pg 205.	3356.00 CY	0	0	0	55,374	0	55,374	16.50
USR GC 6" dia. PE Perf. Pipe		0.00	0.00	0.00	0.51	0.00	0.51	
	4400.00 LF	0	0	0	2,244	0	2,244	0.51

62.20. Restoration	QUANTY	UOM	MANHRS	LABOR	EQUIPMNT	MATERIAL	SUBCONT	TOTAL COST	UNIT COST
USR GC 6" dia. PE Pipe Cplg.			0.00	0.00	0.00	1.65	0.00	1.65	
	8.00	EA	0	0	0	13	0	13	1.65
USR GC Geogrid			0.00	0.00	0.00	0.40	0.00	0.40	
	22954	SY	0	0	0	9,182	0	9,182	0.40
USR GC Rip-Rap			0.00	0.00	0.00	17.75	0.00	17.75	
	725.00	CY	0	0	0	12,869	0	12,869	17.75
USR GC Coir Blanket			0.00	0.00	0.00	1.21	0.00	1.21	
	3300.00	SY	0	0	0	3,993	0	3,993	1.21
USR GC Concrete Foundation			0.00	0.00	0.00	0.00	168.00	168.00	
MEANS Site Work and Landscape Cost Data 1999 Concrete in place including forms and reinforcing, footings strip, 36" x 12", reinforced pg 207	644.00	CY	0	0	0	0	108,192	108,192	168.00
USR GC Interlock. Segmental Block Wall			0.00	0.00	0.00	0.00	12.05	12.05	
MEANS Site Work and Landscape Cost Data 1999 Retaining walls, segmental wall system, interlocking including installation, pg 59.	66861	SF	0	0	0	0	805,675	805,675	12.05
USR GC Seeding			0.00	0.00	0.00	0.00	0.05	0.05	
MEANS Site Work and Landscape Cost Data 1999 Rye fine tectured hyrdor or air seeding pg 71.	39150	SF	0	0	0	0	1,958	1,958	0.05
USR GC Shrubs			0.00	0.00	0.00	0.00	26.67	26.67	
MEANS Site Work and Landscape Cost Data 1999 Shrubs, Cornus mas, 2' to 3' pg 160.	1263.00	EA	0	0	0	0	33,684	33,684	26.67
USR GC Trees			0.00	0.00	0.00	0.00	166.00	166.00	
MEANS Site Work and Landscape Cost Data 1999, Populus nigra italica, 20 gal pg 137 Bagged and burlapped, 12" dia. ball backhoe pg 130	522.00	EA	0	0	0	0	86,652	86,652	166.00

62.20. Restoration	QUANTY	UOM	MANHRS	LABOR	EQUIPMNT	MATERIAL	SUBCONT	TOTAL COST	UNIT COST
USR GC Vines			0.00	0.00	0.00	0.00	2.49	2.49	
MEANS Site Work and Landscape Cost Data 1999, Ground covers, vines and climbing plants, pg 175 Planting, plotted 3' dia. pg 130	612.00	EA	0	0	0	0	1,524	1,524	2.49
TOTAL Hard Structures	29700	SF	0	38,079	16,300	97,074	1037685	1,189,138	40.04
TOTAL Restoration			0	114,238	48,900	399,475	2699819	3,262,432	
TOTAL Restoration of River Bank			0	247,516	244,650	893,083	2699819	4,085,068	
TOTAL GE-Pittsfield EE/CA Alt. #03	1.00	EA	0	1973900	2170268	3116174	5023180	12,283,521	12283521

TRANSPORTATION AND DISPOSAL ALTERNATIVES

GE-Pittsfield EE/CA T & D
Roy F. Weston, Inc.

Designed By:
Estimated By: A. Kessler

Prepared By:

Preparation Date: 00/00/00
Effective Date of Pricing: 00/00/00

Sales Tax: 0.00%

This report is not copyrighted, but the information
contained herein is For Official Use Only.

M C A C E S F O R W I N D O W S
Software Copyright (c) 1985-1998
by Building Systems Design, Inc.
Release 1.2c

GE-Pittsfield EE/CA Transportation and Disposal Alternatives

Disposal Option A, Consolidation of up to 50,000 cy of contaminated soils and sediments at designated consolidation area at GE with off-site treatment/disposal of of excess material.

Disposal Option B, Off-site treatment/disposal of all excavated material.

Disposal Option C, Treatment of all suitable material at the GE facility using thermal desorption, with off-site disposal of all material.

Disposal Option D, Treatment of all suitable material at the GE facility using solvent extraction, with off-site disposal of all material.

Contract Information

Escalation	0.00%
Contingency	25.00%
Engineering and Design	6.00%
USACE Construction Management	8.00%

General Contractor

Contractor Management	10.00%
Field Overhead	6.00%
Home Office Overhead	15.00%
Profit	5.00%
Bond	0.00%

SUMMARY REPORTS SUMMARY PAGE

PROJECT OWNER SUMMARY - Scope.....1
PROJECT OWNER SUMMARY - Facility.....2
PROJECT INDIRECT SUMMARY - Scope.....3
PROJECT INDIRECT SUMMARY - Facility.....4
PROJECT DIRECT SUMMARY - Scope.....5
PROJECT DIRECT SUMMARY - Facility.....6

DETAILED ESTIMATE DETAIL PAGE

70. Disposal Option A
10. On-Site Consolidation.....1
20. Transport and Disposal Off-Site.....2
72. Disposal Option B
20. Transport and Disposal Off-Site.....3
74. Disposal Option C
10. Soil Treatment On-Site TTU.....5
20. Off-Site T&D.....6
30. T & D Off-Site PCB Liquids.....7
76. Disposal Option D
10. Soil Treatment On-Site Soil Wash.....8
20. Off-Site T&D.....9
30. T & D Off-Site PCB Liquids.....10

No Backup Reports...

* * * END TABLE OF CONTENTS * * *

** PROJECT OWNER SUMMARY - Scope **

	QUANTITY	UOM	CONTRACT	ESCALATN	CONTINGN	ENG&DES	CONST MT		TOTAL COST	UNIT COST
70 Disposal Option 134900.00		TN	8,422,679	0	2,105,670	631,701	892,804	0	12,052,854	89.35
72 Disposal Option 134900.00		TN	19,537,912	0	4,884,478	1,465,343	2,071,019	0	27,958,752	207.26
74 Disposal Option 134900.00		TN	36,764,802	0	9,191,200	2,757,360	3,897,069	0	52,610,432	390.00
76 Disposal Option 134900.00		TN	29,910,236	0	7,477,559	2,243,268	3,170,485	0	42,801,547	317.28

	QUANTITY	UOM	CONTRACT	ESCALATN	CONTINGN	ENG&DES	CONST MT		TOTAL COST	UNIT COST
70 Disposal Option										
70.10 On-Site Cons	75000.00	TN	422,384	0	105,596	31,679	44,773	0	604,431	8.06
70.20 Transport an	59900.00	TN	8,000,295	0	2,000,074	600,022	848,031	0	11,448,423	191.13
TOTAL Disposal Opt	134900.00	TN	8,422,679	0	2,105,670	631,701	892,804	0	12,052,854	89.35
72 Disposal Option										
72.20 Transport an	134900.00	TN	19,537,912	0	4,884,478	1,465,343	2,071,019	0	27,958,752	207.26
TOTAL Disposal Opt	134900.00	TN	19,537,912	0	4,884,478	1,465,343	2,071,019	0	27,958,752	207.26
74 Disposal Option										
74.10 Soil Treatme	130400.00	TN	28,297,569	0	7,074,392	2,122,318	2,999,542	0	40,493,821	310.54
74.20 Off-Site T&D	134900.00	TN	8,451,401	0	2,112,850	633,855	895,849	0	12,093,955	89.65
74.30 T & D Off-Si	2000.00	GL	15,832	0	3,958	1,187	1,678	0	22,656	11.33
TOTAL Disposal Opt	134900.00	TN	36,764,802	0	9,191,200	2,757,360	3,897,069	0	52,610,432	390.00
76 Disposal Option										
76.10 Soil Treatme	130400.00	TN	21,443,002	0	5,360,751	1,608,225	2,272,958	0	30,684,936	235.31
76.20 Off-Site T&D	134900.00	TN	8,451,401	0	2,112,850	633,855	895,849	0	12,093,955	89.65
76.30 T & D Off-Si	2000.00	GL	15,832	0	3,958	1,187	1,678	0	22,656	11.33
TOTAL Disposal Opt	134900.00	TN	29,910,236	0	7,477,559	2,243,268	3,170,485	0	42,801,547	317.28

** PROJECT INDIRECT SUMMARY - Scope **

	QUANTITY	UOM	DIRECT	Contr MT	Field OH	Home OH	Profit	Bond	TOTAL COST	UNIT COST
70 Disposal Option	134900.00	TN	5,982,250	598,225	394,829	1,046,296	401,080	0	8,422,679	62.44
72 Disposal Option	134900.00	TN	13,876,900	1,387,690	915,875	2,427,070	930,377	0	19,537,912	144.83
74 Disposal Option	134900.00	TN	26,112,385	2,611,239	1,723,417	4,567,056	1,750,705	0	36,764,802	272.53
76 Disposal Option	134900.00	TN	21,243,895	2,124,390	1,402,097	3,715,557	1,424,297	0	29,910,236	221.72

** PROJECT INDIRECT SUMMARY - Facility **

	QUANTITY	UOM	DIRECT	Contr MT	Field OH	Home OH	Profit	Bond	TOTAL COST	UNIT COST
70 Disposal Option										
70.10 On-Site Cons	75000.00	TN	300,000	30,000	19,800	52,470	20,114	0	422,384	5.63
70.20 Transport an	59900.00	TN	5,682,250	568,225	375,029	993,826	380,966	0	8,000,295	133.56
TOTAL Disposal Opt	134900.00	TN	5,982,250	598,225	394,829	1,046,296	401,080	0	8,422,679	62.44
72 Disposal Option										
72.20 Transport an	134900.00	TN	13,876,900	1,387,690	915,875	2,427,070	930,377	0	19,537,912	144.83
TOTAL Disposal Opt	134900.00	TN	13,876,900	1,387,690	915,875	2,427,070	930,377	0	19,537,912	144.83
74 Disposal Option										
74.10 Soil Treatme	130400.00	TN	20,098,490	2,009,849	1,326,500	3,515,226	1,347,503	0	28,297,569	217.01
74.20 Off-Site T&D	134900.00	TN	6,002,650	600,265	396,175	1,049,863	402,448	0	8,451,401	62.65
74.30 T & D Off-Si	2000.00	GL	11,245	1,125	742	1,967	754	0	15,832	7.92
TOTAL Disposal Opt	134900.00	TN	26,112,385	2,611,239	1,723,417	4,567,056	1,750,705	0	36,764,802	272.53
76 Disposal Option										
76.10 Soil Treatme	130400.00	TN	15,230,000	1,523,000	1,005,180	2,663,727	1,021,095	0	21,443,002	164.44
76.20 Off-Site T&D	134900.00	TN	6,002,650	600,265	396,175	1,049,863	402,448	0	8,451,401	62.65
76.30 T & D Off-Si	2000.00	GL	11,245	1,125	742	1,967	754	0	15,832	7.92
TOTAL Disposal Opt	134900.00	TN	21,243,895	2,124,390	1,402,097	3,715,557	1,424,297	0	29,910,236	221.72

** PROJECT DIRECT SUMMARY - Scope **

		QUANTITY	UOM	MANHRS	LABOR	EQUIPMNT	MATERIAL	SUBCONT	TOTAL COST	UNIT COST
70	Disposal Option A	134900.00	TN	0	0	0	0	5982250	5,982,250	44.35
72	Disposal Option B	134900.00	TN	0	0	0	0	13876900	13,876,900	102.87
74	Disposal Option C	134900.00	TN	0	0	0	0	26112385	26,112,385	193.57
76	Disposal Option D	134900.00	TN	0	0	0	0	21243895	21,243,895	157.48

	QUANTITY	UOM	MANHRS	LABOR	EQUIPMNT	MATERIAL	SUBCONT	TOTAL COST	UNIT COST
70 Disposal Option A									
70.10 On-Site Consolidation	75000.00	TN	0	0	0	0	300,000	300,000	4.00
70.20 Transport and Disposal Off-Site	59900.00	TN	0	0	0	0	5682250	5,682,250	94.86
TOTAL Disposal Option A	134900.00	TN	0	0	0	0	5982250	5,982,250	44.35
72 Disposal Option B									
72.20 Transport and Disposal Off-Site	134900.00	TN	0	0	0	0	13876900	13,876,900	102.87
TOTAL Disposal Option B	134900.00	TN	0	0	0	0	13876900	13,876,900	102.87
74 Disposal Option C									
74.10 Soil Treatment On-Site TTU	130400.00	TN	0	0	0	0	20098490	20,098,490	154.13
74.20 Off-Site T&D	134900.00	TN	0	0	0	0	6002650	6,002,650	44.50
74.30 T & D Off-Site PCB Liquids	2000.00	GL	0	0	0	0	11,245	11,245	5.62
TOTAL Disposal Option C	134900.00	TN	0	0	0	0	26112385	26,112,385	193.57
76 Disposal Option D									
76.10 Soil Treatment On-Site Soil Wash	130400.00	TN	0	0	0	0	15230000	15,230,000	116.79
76.20 Off-Site T&D	134900.00	TN	0	0	0	0	6002650	6,002,650	44.50
76.30 T & D Off-Site PCB Liquids	2000.00	GL	0	0	0	0	11,245	11,245	5.62
TOTAL Disposal Option D	134900.00	TN	0	0	0	0	21243895	21,243,895	157.48

70. Disposal Option A

70.10. On-Site Consolidation

Assume 50,000 cy of volume available on-site for on-site consolidation.

70.10.10. Trans. Matl to On-Site Facility

Assume placement by others.

RCRA C Waste 4200 tn
Solid Waste 52650 tn
TSCA Waste 18150 tn

Assume (3) trucks x (75000 tn / 450 tn/day) x 8 hrs/day = 4000 hrs

	QUANTY	UOM	MANHRS	LABOR	EQUIPMNT	MATERIAL	SUBCONT	TOTAL COST	UNIT COST
USR GC Dump Truck (3)			0.00	0.00	0.00	0.00	75.00	75.00	
	4000.00	HR	0	0	0	0	300,000	300,000	75.00
TOTAL Trans. Matl to On-Site Facility	75000	TN	0	0	0	0	300,000	300,000	4.00
TOTAL On-Site Consolidation	75000	TN	0	0	0	0	300,000	300,000	4.00

70.20. Transport and Disposal Off-Site	QUANTY	UOM	MANHRS	LABOR	EQUIPMNT	MATERIAL	SUBCONT	TOTAL COST	UNIT COST
70.20. Transport and Disposal Off-Site									
70.20.10. Transportation Off-Site Landfill									
USR GC Trans Solid Waste			0.00	0.00	0.00	0.00	35.00	35.00	
	59550	TN	0	0	0	0	2084250	2,084,250	35.00
USR GC Trans Chipped Vegetation			0.00	0.00	0.00	0.00	20.00	20.00	
	250.00	TN	0	0	0	0	5,000	5,000	20.00
USR GC Trans Residuals Disposals			0.00	0.00	0.00	0.00	40.00	40.00	
	100.00	TN	0	0	0	0	4,000	4,000	40.00
TOTAL Transportation Off-Site Landfill	59900	TN	0	0	0	0	2093250	2,093,250	34.95
70.20.20. Disposal Off-Site Landfill									
USR GC Disposal Residuals			0.00	0.00	0.00	0.00	110.00	110.00	
	100.00	TN	0	0	0	0	11,000	11,000	110.00
USR GC Disposal Chipped Vegetation			0.00	0.00	0.00	0.00	20.00	20.00	
	250.00	TN	0	0	0	0	5,000	5,000	20.00
USR GC Disposal Solid Waste			0.00	0.00	0.00	0.00	60.00	60.00	
	59550	TN	0	0	0	0	3573000	3,573,000	60.00
TOTAL Disposal Off-Site Landfill	59900	TN	0	0	0	0	3589000	3,589,000	59.92
TOTAL Transport and Disposal Off-Site	59900	TN	0	0	0	0	5682250	5,682,250	94.86
TOTAL Disposal Option A	134900	TN	0	0	0	0	5982250	5,982,250	44.35

72. Disposal Option B

72.20. Transport and Disposal Off-Site

RCRA C Waste	4200	tn
Solid Waste	112200	tn
TSCA Waste	18150	tn
Chipped Vegetation	250	tn
Residuals Disposals	100	tn

72.20.10. Transportation Off-Site Landfill

72.20. Transport and Disposal Off-Site	QUANTY	UOM	MANHRS	LABOR	EQUIPMNT	MATERIAL	SUBCONT	TOTAL COST	UNIT COST
USR GC Trans Solid Waste			0.00	0.00	0.00	0.00	35.00	35.00	
	112200	TN	0	0	0	0	3927000	3,927,000	35.00
USR GC Trans Chipped Vegetation			0.00	0.00	0.00	0.00	20.00	20.00	
	250.00	TN	0	0	0	0	5,000	5,000	20.00
USR GC Trans Residuals Disposals			0.00	0.00	0.00	0.00	40.00	40.00	
	100.00	TN	0	0	0	0	4,000	4,000	40.00
USR GC Trans RCRA C Waste			0.00	0.00	0.00	0.00	40.00	40.00	
	4200.00	TN	0	0	0	0	168,000	168,000	40.00
USR GC Trans TSCA Waste			0.00	0.00	0.00	0.00	40.00	40.00	
	18150	TN	0	0	0	0	726,000	726,000	40.00
TOTAL Transportation Off-Site Landfill	134900	TN	0	0	0	0	4830000	4,830,000	35.80

72.20.20. Disposal Off-Site Landfill

USR GC Disposal Residuals			0.00	0.00	0.00	0.00	110.00	110.00	
	100.00	TN	0	0	0	0	11,000	11,000	110.00
USR GC Disposal Chipped Vegetation			0.00	0.00	0.00	0.00	20.00	20.00	
	250.00	TN	0	0	0	0	5,000	5,000	20.00
USR GC Disposal Solid Waste			0.00	0.00	0.00	0.00	60.00	60.00	
	112200	TN	0	0	0	0	6732000	6,732,000	60.00
USR GC Disposal RCRA C Waste			0.00	0.00	0.00	0.00	72.00	72.00	
	4200.00	TN	0	0	0	0	302,400	302,400	72.00
USR GC Disposal TSCA Waste			0.00	0.00	0.00	0.00	110.00	110.00	
	18150	TN	0	0	0	0	1996500	1,996,500	110.00
TOTAL Disposal Off-Site Landfill	134900	TN	0	0	0	0	9046900	9,046,900	67.06
TOTAL Transport and Disposal Off-Site	134900	TN	0	0	0	0	13876900	13,876,900	102.87

72.20. Transport and Disposal Off-Site	QUANTY	UOM	MANHRS	LABOR	EQUIPMNT	MATERIAL	SUBCONT	TOTAL COST	UNIT COST
TOTAL Disposal Option B	134900	TN	0	0	0	0	13876900	13,876,900	102.87

74.10. Soil Treatment On-Site TTU	QUANTY	UOM	MANHRS	LABOR	EQUIPMNT	MATERIAL	SUBCONT	TOTAL COST	UNIT COST
74. Disposal Option C									
74.10. Soil Treatment On-Site TTU									
Thermal treatment costs from Roy F. Weston, Inc. Thermal Systems Department estimating spreadsheet.									
USR GC TTU Pre-Mobilization			0.00	0.00	0.00	0.00	200000	200000.00	
	1.00	LS	0	0	0	0	200,000	200,000	200000.00
USR GC TTU Mobilization			0.00	0.00	0.00	0.00	1150000	1150000.00	
	1.00	LS	0	0	0	0	1150000	1,150,000	1150000
USR GC TTU Start-up w/ Clean Soils			0.00	0.00	0.00	0.00	336438	336438.00	
	1.00	LS	0	0	0	0	336,438	336,438	336438.00
USR GC TTU Operation			0.00	0.00	0.00	0.00	139.81	139.81	
	130400	TN	0	0	0	0	18231224	18,231,224	139.81
USR GC TTU Demobilization			0.00	0.00	0.00	0.00	180828	180828.00	
	1.00	LS	0	0	0	0	180,828	180,828	180828.00
TOTAL Soil Treatment On-Site TTU	130400	TN	0	0	0	0	20098490	20,098,490	154.13

74.20. Off-Site T&D	QUANTY	UOM	MANHRS	LABOR	EQUIPMNT	MATERIAL	SUBCONT	TOTAL COST	UNIT COST
74.20. Off-Site T&D									
74.20.10. Transportation Off-Site Landfill									
USR GC Trans Solid Waste			0.00	0.00	0.00	0.00	35.00	35.00	
	15750	TN	0	0	0	0	551,250	551,250	35.00
USR GC Trans Landfill Cover			0.00	0.00	0.00	0.00	20.00	20.00	
	114600	TN	0	0	0	0	2292000	2,292,000	20.00
USR GC Trans Chipped Vegetation			0.00	0.00	0.00	0.00	20.00	20.00	
	250.00	TN	0	0	0	0	5,000	5,000	20.00
USR GC Trans Residuals Disposals			0.00	0.00	0.00	0.00	40.00	40.00	
	100.00	TN	0	0	0	0	4,000	4,000	40.00
USR GC Trans RCRA C Waste			0.00	0.00	0.00	0.00	40.00	40.00	
	4200.00	TN	0	0	0	0	168,000	168,000	40.00
TOTAL Transportation Off-Site Landfill	134900	TN	0	0	0	0	3020250	3,020,250	22.39
74.20.20. Disposal Off-Site Landfill									
USR GC Disposal Residuals			0.00	0.00	0.00	0.00	110.00	110.00	
	100.00	TN	0	0	0	0	11,000	11,000	110.00
USR GC Disposal Chipped Vegetation			0.00	0.00	0.00	0.00	20.00	20.00	
	250.00	TN	0	0	0	0	5,000	5,000	20.00
USR GC Disposal Landfill Cover			0.00	0.00	0.00	0.00	15.00	15.00	
	114600	TN	0	0	0	0	1719000	1,719,000	15.00
USR GC Disposal Solid Waste			0.00	0.00	0.00	0.00	60.00	60.00	
	15750	TN	0	0	0	0	945,000	945,000	60.00
USR GC Disposal RCRA C Waste			0.00	0.00	0.00	0.00	72.00	72.00	
	4200.00	TN	0	0	0	0	302,400	302,400	72.00
TOTAL Disposal Off-Site Landfill	134900	TN	0	0	0	0	2982400	2,982,400	22.11
TOTAL Off-Site T&D	134900	TN	0	0	0	0	6002650	6,002,650	44.50

74.30. T & D Off-Site PCB Liquids	QUANTY	UOM	MANHRS	LABOR	EQUIPMNT	MATERIAL	SUBCONT	TOTAL COST	UNIT COST
74.30. T & D Off-Site PCB Liquids									
Liquids generated from treatment process. Assume 2000 gallons of PCB contaminated liquids.									
USR GC Trans PCB Liquids (Incinerator)			0.00	0.00	0.00	0.00	1245.00	1245.00	
	1.00	LD	0	0	0	0	1,245	1,245	1245.00
USR GC Disposal PCB Liquid (Incinerate)			0.00	0.00	0.00	0.00	250.00	250.00	
	40.00	DM	0	0	0	0	10,000	10,000	250.00
TOTAL T & D Off-Site PCB Liquids	2000.00	GL	0	0	0	0	11,245	11,245	5.62
TOTAL Disposal Option C	134900	TN	0	0	0	0	26112385	26,112,385	193.57

76.10. Soil Treatment On-Site Soil Wash	QUANTY	UOM	MANHRS	LABOR	EQUIPMNT	MATERIAL	SUBCONT	TOTAL COST	UNIT COST
76. Disposal Option D									
76.10. Soil Treatment On-Site Soil Wash									
On-site soil solvent extraction cost taken from Resources Conservation Company dated 17 Aug 99.									
USR GC Soil Wash ALLOWANCE Best Testing			0.00	0.00	0.00	0.00	10000	10000.00	
	1.00	LS	0	0	0	0	10,000	10,000	10000.00
USR GC Soil Wash Capital Cost			0.00	0.00	0.00	0.00	8000000	8000000.00	
	1.00	LS	0	0	0	0	8000000	8,000,000	8000000
USR GC Soil Wash Mob/Demob			0.00	0.00	0.00	0.00	700000	700000.00	
	1.00	LS	0	0	0	0	700,000	700,000	700000.00
USR GC Soil Wash Operation			0.00	0.00	0.00	0.00	50.00	50.00	
	130400	TN	0	0	0	0	6520000	6,520,000	50.00
TOTAL Soil Treatment On-Site Soil Wash	130400	TN	0	0	0	0	15230000	15,230,000	116.79

76.20. Off-Site T&D	QUANTY	UOM	MANHRS	LABOR	EQUIPMNT	MATERIAL	SUBCONT	TOTAL COST	UNIT COST
76.20. Off-Site T&D									
76.20.10. Transportation Off-Site Landfill									
USR GC Trans Solid Waste			0.00	0.00	0.00	0.00	35.00	35.00	
	15750	TN	0	0	0	0	551,250	551,250	35.00
USR GC Trans Landfill Cover			0.00	0.00	0.00	0.00	20.00	20.00	
	114600	TN	0	0	0	0	2292000	2,292,000	20.00
USR GC Trans Chipped Vegetation			0.00	0.00	0.00	0.00	20.00	20.00	
	250.00	TN	0	0	0	0	5,000	5,000	20.00
USR GC Trans Residuals Disposals			0.00	0.00	0.00	0.00	40.00	40.00	
	100.00	TN	0	0	0	0	4,000	4,000	40.00
USR GC Trans RCRA C Waste			0.00	0.00	0.00	0.00	40.00	40.00	
	4200.00	TN	0	0	0	0	168,000	168,000	40.00
TOTAL Transportation Off-Site Landfill	134900	TN	0	0	0	0	3020250	3,020,250	22.39
76.20.20. Disposal Off-Site Landfill									
USR GC Disposal Residuals			0.00	0.00	0.00	0.00	110.00	110.00	
	100.00	TN	0	0	0	0	11,000	11,000	110.00
USR GC Disposal Chipped Vegetation			0.00	0.00	0.00	0.00	20.00	20.00	
	250.00	TN	0	0	0	0	5,000	5,000	20.00
USR GC Disposal Landfill Cover			0.00	0.00	0.00	0.00	15.00	15.00	
	114600	TN	0	0	0	0	1719000	1,719,000	15.00
USR GC Disposal Solid Waste			0.00	0.00	0.00	0.00	60.00	60.00	
	15750	TN	0	0	0	0	945,000	945,000	60.00
USR GC Disposal RCRA C Waste			0.00	0.00	0.00	0.00	72.00	72.00	
	4200.00	TN	0	0	0	0	302,400	302,400	72.00
TOTAL Disposal Off-Site Landfill	134900	TN	0	0	0	0	2982400	2,982,400	22.11
TOTAL Off-Site T&D	134900	TN	0	0	0	0	6002650	6,002,650	44.50

76.30. T & D Off-Site PCB Liquids	QUANTY	UOM	MANHRS	LABOR	EQUIPMNT	MATERIAL	SUBCONT	TOTAL COST	UNIT COST
76.30. T & D Off-Site PCB Liquids									
Liquids generated from treatment process. Assume 2000 gallons of PCB contaminated liquids.									
USR GC Trans PCB Liquids (Incinerator)			0.00	0.00	0.00	0.00	1245.00	1245.00	
	1.00	LD	0	0	0	0	1,245	1,245	1245.00
USR GC Disposal PCB Liquid (Incinerate)			0.00	0.00	0.00	0.00	250.00	250.00	
	40.00	DM	0	0	0	0	10,000	10,000	250.00
TOTAL T & D Off-Site PCB Liquids	2000.00	GL	0	0	0	0	11,245	11,245	5.62
TOTAL Disposal Option D	134900	TN	0	0	0	021243895		21,243,895	157.48
TOTAL GE-Pittsfield EE/CA T & D	1.00	EA	0	0	0	067215430		67,215,430	67215430

RIPARIAN MONITORING COST ESTIMATE

** PROJECT OWNER SUMMARY - Scope **

		QUANTITY	UOM	CONTRACT	ESCALATN	CONTINGN	ENG&DES	CONST MT		TOTAL COST	UNIT COST
10	Riparian Monito			198,526	119,116	49,632	11,912	15,882	0	395,068	
20	Riparian Monito			51,150	30,690	12,788	3,069	4,092	0	101,789	
30	Riparian Monito			55,229	33,138	13,807	3,314	4,418	0	109,906	
40	Riparian Monito			61,794	37,076	15,449	3,708	4,944	0	122,970	
50	Riparian Monito			28,704	17,222	7,176	1,722	2,296	0	57,121	
60	Riparian Monito			53,530	32,118	13,382	3,212	4,282	0	106,524	
70	Riparian Monito			24,869	14,921	6,217	1,492	1,990	0	49,489	
80	Riparian Monito			46,369	27,822	11,592	2,782	3,710	0	92,275	
90	Riparian Monito			21,540	12,924	5,385	1,292	1,723	0	42,864	
	GE-Pittsfield E	1.00	EA	541,712	325,027	135,428	32,503	43,337	0	1,078,006	1078006

** PROJECT INDIRECT SUMMARY - Scope **

	QUANTITY	UOM	DIRECT	FIELD OH	HOME OH	PROFIT	BOND		TOTAL COST	UNIT COST
10 Riparian Monito			155,707	9,342	23,356	7,785	2,336	0	198,526	
20 Riparian Monito			40,118	2,407	6,018	2,006	602	0	51,150	
30 Riparian Monito			43,317	2,599	6,498	2,166	650	0	55,229	
40 Riparian Monito			48,466	2,908	7,270	2,423	727	0	61,794	
50 Riparian Monito			22,513	1,351	3,377	1,126	338	0	28,704	
60 Riparian Monito			41,984	2,519	6,298	2,099	630	0	53,530	
70 Riparian Monito			19,505	1,170	2,926	975	293	0	24,869	
80 Riparian Monito			36,368	2,182	5,455	1,818	546	0	46,369	
90 Riparian Monito			16,894	1,014	2,534	845	253	0	21,540	
GE-Pittsfield E	1.00	EA	424,872	25,492	63,731	21,244	6,373	0	541,712	541711.80
Escalation									325,027	
SUBTOTAL									866,739	
Contingency									135,428	
SUBTOTAL									1,002,167	
Engineering and Design									32,503	
SUBTOTAL									1,034,670	
USACE Construction Management									43,337	
TOTAL INCL OWNER COSTS									1,078,006	

** PROJECT DIRECT SUMMARY - Scope **

		QUANTITY	UOM	MANHRS	LABOR	EQUIPMNT	MATERIAL	SUBCONT	TOTAL COST	UNIT COST
10	Riparian Monitoring Years 1 - 3			0	0	0	0	155,707	155,707	
20	Riparian Monitoring Year 4			0	0	0	0	40,118	40,118	
30	Riparian Monitoring Year 5			0	0	0	0	43,317	43,317	
40	Riparian Monitoring Year 6 - 9			0	0	0	0	48,466	48,466	
50	Riparian Monitoring Year 10			0	0	0	0	22,513	22,513	
60	Riparian Monitoring Year 11 - 14			0	0	0	0	41,984	41,984	
70	Riparian Monitoring Year 15			0	0	0	0	19,505	19,505	
80	Riparian Monitoring Year 16 - 19			0	0	0	0	36,368	36,368	
90	Riparian Monitoring Year 20			0	0	0	0	16,894	16,894	
TOTAL	GE-Pittsfield EE/CA O & M 1	1.00	EA	0	0	0	0	424,872	424,872	424872.00
	Field Overhead								25,492	
	SUBTOTAL								450,364	
	Home Office Overhead								63,731	
	SUBTOTAL								514,095	
	PROFIT								21,244	
	SUBTOTAL								535,339	
	BOND								6,373	
	TOTAL INCL INDIRECTS								541,712	
	Escalation								325,027	
	SUBTOTAL								866,739	
	Contingency								135,428	
	SUBTOTAL								1,002,167	
	Engineering and Design								32,503	
	SUBTOTAL								1,034,670	
	USACE Construction Management								43,337	
	TOTAL INCL OWNER COSTS								1,078,006	

10. Riparian Monitoring Years 1 - 3

	QUANTY	UOM	MANHRS	LABOR	EQUIPMNT	MATERIAL	SUBCONT	TOTAL COST	UNIT COST
TOTAL Riparian Monitoring Years 1 - 3			0	0	0	0	155,707	155,707	
TOTAL Riparian Monitoring Year 4			0	0	0	0	40,118	40,118	

	QUANTY	UOM	MANHRS	LABOR	EQUIPMNT	MATERIAL	SUBCONT	TOTAL COST	UNIT COST
TOTAL Riparian Monitoring Year 5			0	0	0	0	43,317	43,317	
TOTAL Riparian Monitoring Year 6 - 9			0	0	0	0	48,466	48,466	

	QUANTY	UOM	MANHRS	LABOR	EQUIPMNT	MATERIAL	SUBCONT	TOTAL COST	UNIT COST
TOTAL Riparian Monitoring Year 10			0	0	0	0	22,513	22,513	
TOTAL Riparian Monitoring Year 11 - 14			0	0	0	0	41,984	41,984	

	QUANTY	UOM	MANHRS	LABOR	EQUIPMNT	MATERIAL	SUBCONT	TOTAL COST	UNIT COST
TOTAL Riparian Monitoring Year 15			0	0	0	0	19,505	19,505	
TOTAL Riparian Monitoring Year 16 - 19			0	0	0	0	36,368	36,368	

	QUANTY	UOM	MANHRS	LABOR	EQUIPMNT	MATERIAL	SUBCONT	TOTAL COST	UNIT COST
TOTAL Riparian Monitoring Year 20			0	0	0	0	16,894	16,894	
TOTAL GE-Pittsfield EE/CA O & M 1	1.00	EA	0	0	0	0	424,872	424,872	424872.00

GE Pittsfield

Riparian Monitoring

Year (s)	Value	Esclation (3%) *				Escalated	Present Worth (6%) *		Present
		F/A	n	F/P	n	Value	P/F	n	Worth
1-3	$ 60,000	3.0909	3			$185,454	0.8396	3	$155,707
4	$ 45,000			1.1255	4	50,648	0.7921	4	$ 40,118
5	$ 50,000			1.1593	5	57,965	0.7473	5	$ 43,317
6-9	$ 15,000	4.1836	4	1.3048	9	$ 81,881	0.5919	9	$ 48,466
10	$ 30,000			1.3439	10	40,317	0.5584	10	$ 22,513
11-14	$ 15,000	4.1836	4	1.5126	14	$ 94,922	0.4423	14	$ 41,984
15	$ 30,000			1.5580	15	46,740	0.4173	15	$ 19,505
15-19	$ 15,000	4.1836	4	1.7535	19	$110,039	0.3305	19	$ 36,368
20	$ 30,000			1.8061	20	54,183	0.3118	20	$ 16,894
TOTALS						$722,149			$424,872

Notes: * Assume 3% escalation with multiplication factors from Engineering Economics Tables.

** Assume 6% bond interest if invested year one with multiplication factors from Engineering Economics Tables.

GE Housatonic River Project
DRAFT - CONFIDENTIAL

Telecon w/ Bill Stack 8/18/99

60/hr

Monitoring Visits 2 # days

Erosion - 1/yr - Year 1-5 also for each Q10

1/5yrs - Year 5-20

4-5 days

Riparian 3x/yr yr 1-3 2 people

2x/yr 4,5

1/yr 5-20

2.1-9

Wildlife Assessments

yr 1, 3, 5, 10

Macroinvert.

1, 2, 3, 5, 10 2 people 1/2 day

99P-1610

From Previous Page

	Rest Mon/Rec./Coord		Maintenance
Year 1	58 K	⇒ 60	
Year 2	58 K		
Year 3	58 K		
Year 4	43.5 K	45	
Year 5	48.5 K	50	
Year 6	13.5 K	15	
7	13.5 K		
8	13.5 K		
9	13.5 K		
Year 10	31 K	30	
Year 11	13.5 K	15	Restoration Monitoring 20 yrs
12	13.5 K		
13	13.5 K		
14	13.5 K		$550 K
Year 15	31 K	30	
Year 16	13.5 K	15	
17	13.5 K		(Op Monitoring (Alts 1, 5a, 5b)
18	13.5 K		
19	13.5 K		$100 K
20	31 K	30	
	521 K	545 ⇒ 550	
Years 20-50	100 K		
	650 K		

.006 ppm
27 years
2.3 ppm

.006 .005
110
2

PCBs 132.50

Monitoring Costs (All Alternatives)

Assume $65/hour/person

YEAR 1, Year 2, Year 3

48 man days
25 K labor
10 K exp

Visit 1	Erosion (2 people, 8 days)	Annual Report ~~2 people 5 days~~	
	Riparian (2 people, 5 days)	15 K	
	Wildlife (2 people 1 day)	Coord 3 K	
Visit 2	Riparian (2 people, 5 days)	5 K exp	
Visit 3	Riparian (2 people, 5 days)		

Year 4

36 man days
20 K labor
7.5 K exp

Visit 1	Erosion (2 people, 8 days)	Report 10.5 K
	Riparian (2 people, 5 days)	Coord 3 K
Visit 2	Riparian (2 people 5 days)	3 K exp

Year 5

38 man days
20 K labor
10 K exp

Visit 1	Erosion (2 people, 8 days)	Report 12.5 K
	Riparian (2 people 5 days)	Coord 3 K
	Wildlife (2 people, 1 day)	3 K exp
Visit 2	Riparian (2 people, 5 days)	

Year 6, 7, 8, 9

10
5 K lab
1.5 K exp

Visit 1	Riparian (2 people, 5 days)	Report 5 K
		Coord 1 K
		Exp 1 K

Year 10

28 lab
15 K
5 K exp

Visit 1	Erosion (2 people, 8 days)	Report 7.5 K
	Riparian (2 people, 5 days)	Coord 2 K
	Wildlife (2 people, 1 day)	Exp 1.5 K

10 5 K lab
1.5 K exp

Years 11-14, 16-19	Riparian (2 people, 5 days)	Report 5 K. Coord 1 K Ex 1 K
Years 15, 20	Erosion (2 people, 8 days)	
	Riparian (2 people 5 days)	Report 7.5 K
		Coord 2 K Exp 1.5 K

26 15 K
5 K exp

ANNUAL MAINTENANCE COST ESTIMATE

GE-Pittsfield EE/CA O & M 3
Roy F. Weston. Inc.

Designed By:
Estimated By: A. Kessler

Prepared By:

Preparation Date: 08/20/99
Effective Date of Pricing: 08/20/99

Sales Tax: 0.00%

This report is not copyrighted, but the information
contained herein is For Official Use Only.

M C A C E S G O L D E D I T I O N
Composer GOLD Software Copyright (c) 1985-1994
by Building Systems Design, Inc.
Release 5.30

Currency in DOLLARS

Annual maintenance includes labor, equipment and expenses.

See Appendix P of EE/CA report for written description.

SUMMARY REPORTS SUMMARY PAGE

PROJECT OWNER SUMMARY - Scope.....1
PROJECT INDIRECT SUMMARY - Scope.....2
PROJECT DIRECT SUMMARY - Scope.....3

DETAILED ESTIMATE DETAIL PAGE

10. Annual Maintenance Years 1 - 5.....1
20. Annual Maintenance Years 6 - 10.....1
30. Annual Maintenance Years 11 - 20.....2

No Backup Reports...

* * * END TABLE OF CONTENTS * * *

** PROJECT OWNER SUMMARY - Scope **

		QUANTITY	UOM	CONTRACT	ESCALATN	CONTINGN	ENG&DES	CONST MT		TOTAL COST	UNIT COST
10	Annual Maintena			319,298	191,579	79,825	19,158	25,544	0	635,404	
20	Annual Maintena			203,945	122,367	50,986	12,237	16,316	0	405,851	
30	Annual Maintena			221,512	132,907	55,378	13,291	17,721	0	440,809	
	GE-Pittsfield E	1.00	EA	744,756	446,853	186,189	44,685	59,580	0	1,482,064	1482064

** PROJECT INDIRECT SUMMARY - Scope **

	QUANTITY	UOM	DIRECT	FIELD OH	HOME OH	PROFIT	BOND		TOTAL COST	UNIT COST
10 Annual Maintena			250,430	15,026	37,565	12,522	3,756	0	319,298	
20 Annual Maintena			159,957	9,597	23,994	7,998	2,399	0	203,945	
30 Annual Maintena			173,735	10,424	26,060	8,687	2,606	0	221,512	
GE-Pittsfield E	1.00	EA	584,122	35,047	87,618	29,206	8,762	0	744,756	744755.55
Escalation									446,853	
SUBTOTAL									1,191,609	
Contingency									186,189	
SUBTOTAL									1,377,798	
Engineering and Design									44,685	
SUBTOTAL									1,422,483	
USACE Construction Management									59,580	
TOTAL INCL OWNER COSTS									1,482,064	

** PROJECT DIRECT SUMMARY - Scope **

	QUANTITY	UOM	MANHRS	LABOR	EQUIPMNT	MATERIAL	SUBCONT	TOTAL COST	UNIT COST
10 Annual Maintenance Years 1 - 5			0	0	0	0	250,430	250,430	
20 Annual Maintenance Years 6 - 10			0	0	0	0	159,957	159,957	
30 Annual Maintenance Years 11 - 20			0	0	0	0	173,735	173,735	
TOTAL GE-Pittsfield EE/CA O & M 3	1.00	EA	0	0	0	0	584,122	584,122	584122.00
Field Overhead								35,047	
SUBTOTAL								619,169	
Home Office Overhead								87,618	
SUBTOTAL								706,788	
PROFIT								29,206	
SUBTOTAL								735,994	
BOND								8,762	
TOTAL INCL INDIRECTS								744,756	
Escalation								446,853	
SUBTOTAL								1,191,609	
Contingency								186,189	
SUBTOTAL								1,377,798	
Engineering and Design								44,685	
SUBTOTAL								1,422,483	
USACE Construction Management								59,580	
TOTAL INCL OWNER COSTS								1,482,064	

10. Annual Maintenance Years 1 - 5

	QUANTY	UOM	MANHRS	LABOR	EQUIPMNT	MATERIAL	SUBCONT	TOTAL COST	UNIT COST
TOTAL Annual Maintenance Years 1 - 5			0	0	0	0	250,430	250,430	
TOTAL Annual Maintenance Years 6 - 10			0	0	0	0	159,957	159,957	

30. Annual Maintenance Years 11 - 20

	QUANTY	UOM	MANHRS	LABOR	EQUIPMNT	MATERIAL	SUBCONT	TOTAL COST	UNIT COST
TOTAL Annual Maintenance Years 11 - 20			0	0	0	0	173,735	173,735	
TOTAL GE-Pittsfield EE/CA O & M 3	1.00	EA	0	0	0	0	584,122	584,122	584122.00

GE Pittsfield

Annual Maintenance

Year	Value	Esclation (3%) *				Escalated Value	Present Worth (6%) *		Present Worth
		F/A	n	F/P	n		P/F	n	
1-5	$ 50,000	5.3091	5			$265,455	0.9434	5	$250,430
6-10	$ 30,000	5.3091	5	1.3439	10	$214,047	0.7473	10	$159,957
11-20	$ 15,000	11.4639	10	1.8061	20	$310,574	0.5594	20	$173,735
TOTALS						$790,076			$584,123

Notes: * Assume 3% escalation with multiplication factors from Engineering Economics Tables.

** Assume 6% bond interest if invested year one with multiplication factors from Engineering Economics Tables.

Annual Maintenance

Years 1-5

$ 50,000 per year

$15,000 labor
$15,000 equip
$20,000 materials

Years 5-10

$ 30,000 per year

250
150
150
550

Years 10-20

~~$15,000~~ 15,000 per year

Total (20 years) $550 K

ON-SITE CONSOLIDATION COST ESTIMATE

GE-Pittsfield EE/CA Alt. #01
Roy F. Weston, Inc.

Designed By:
Estimated By: A. Kessler

Prepared By:

Preparation Date: 02/07/00
Effective Date of Pricing: 02/07/00

Sales Tax: 0.00%

This report is not copyrighted, but the information
contained herein is For Official Use Only.

M C A C E S F O R W I N D O W S
Software Copyright (c) 1985-1998
by Building Systems Design, Inc.
Release 1.2c

GE-Pittsfield Alternative No. 1

Wet excavation to cleanup criteria (as determined on a subreach basis and as defined in Section 3 of EE/CA report). Riverbank and riverbed restoration. This alternative involves no river diversion.

See section 5.2 of EE/CA report for written desciptions of activities.

Project Information

Escalation	0.00%
Contingency	25.00%
Engineering and Design	6.00%
USACE Construction Management	8.00%

General Contractor

Contractor Management	10.00%
Field Overhead	6.00%
Home Office Overhead	15.00%
Profit	5.00%
Bond	0.00%

SUMMARY REPORTS SUMMARY PAGE

PROJECT OWNER SUMMARY - Scope.....1
PROJECT OWNER SUMMARY - Facility.....2
PROJECT INDIRECT SUMMARY - Scope.....3
PROJECT INDIRECT SUMMARY - Facility.....4
PROJECT DIRECT SUMMARY - Scope.....5
PROJECT DIRECT SUMMARY - Facility.....6

DETAILED ESTIMATE DETAIL PAGE

60. On-Site Consolidation
10. Place and Compact Material.....1
15. ALLOWANCE Down Time.....2

No Backup Reports...

* * * END TABLE OF CONTENTS * * *

** PROJECT OWNER SUMMARY - Scope **

	QUANTITY	UOM	CONTRACT	ESCLATIN	CONTINGN	ENG&DES	CONST MT		TOTAL COST	UNIT COST
60 On-Site Consoli			420,034	0	105,008	31,503	44,524	0	601,068	
GE-Pittsfield E	1.00	EA	420,034	0	105,008	31,503	44,524	0	601,068	601068.22

** PROJECT OWNER SUMMARY - Facility **

	QUANTITY	UOM	CONTRACT	ESCLATIN	CONTINGN	ENG&DES	CONST MT		TOTAL COST	UNIT COST
60 On-Site Consoli										
60.10 Place and Co	50000.00	CY	363,857	0	90,964	27,289	38,569	0	520,679	10.41
60.15 ALLOWANCE Do			56,177	0	14,044	4,213	5,955	0	80,389	
TOTAL On-Site Cons			420,034	0	105,008	31,503	44,524	0	601,068	
TOTAL GE-Pittsfiel	1.00	EA	420,034	0	105,008	31,503	44,524	0	601,068	601068.22

** PROJECT INDIRECT SUMMARY - Scope **

	QUANTITY	UOM	DIRECT	Contr MT	Field OH	Home OH	Profit	Bond	TOTAL COST	UNIT COST
60 On-Site Consoli			298,331	29,833	19,690	52,178	20,002	0	420,034	
GE-Pittsfield E	1.00	EA	298,331	29,833	19,690	52,178	20,002	0	420,034	420033.70
Contingency									105,008	
SUBTOTAL									525,042	
Engineering and Design									31,503	
SUBTOTAL									556,545	
USACE Construction Management									44,524	
TOTAL INCL OWNER COSTS									601,068	

** PROJECT INDIRECT SUMMARY - Facility **

	QUANTITY	UOM	DIRECT	Contr MT	Field OH	Home OH	Profit	Bond	TOTAL COST	UNIT COST
60 On-Site Consoli										
60.10 Place and Co	50000.00	CY	258,431	25,843	17,056	45,200	17,327	0	363,857	7.28
60.15 ALLOWANCE Do			39,900	3,990	2,633	6,979	2,675	0	56,177	
TOTAL On-Site Cons			298,331	29,833	19,690	52,178	20,002	0	420,034	
TOTAL GE-Pittsfiel	1.00	EA	298,331	29,833	19,690	52,178	20,002	0	420,034	420033.70
Contingency									105,008	
SUBTOTAL									525,042	
Engineering and Design									31,503	
SUBTOTAL									556,545	
USACE Construction Management									44,524	
TOTAL INCL OWNER COSTS									601,068	

** PROJECT DIRECT SUMMARY - Scope **

	QUANTITY	UOM	MANHRS	LABOR	EQUIPMNT	MATERIAL	SUBCONT	TOTAL COST	UNIT COST
60 On-Site Consolidation			0	145,031	153,300	0	0	298,331	
TOTAL GE-Pittsfield EE/CA Alt. #01	1.00	EA	0	145,031	153,300	0	0	298,331	298331.04
Contractor Management								29,833	
SUBTOTAL								328,164	
Field Overhead								19,690	
SUBTOTAL								347,854	
Home Office Overhead								52,178	
SUBTOTAL								400,032	
Profit								20,002	
TOTAL INCL INDIRECTS								420,034	
Contingency								105,008	
SUBTOTAL								525,042	
Engineering and Design								31,503	
SUBTOTAL								556,545	
USACE Construction Management								44,524	
TOTAL INCL OWNER COSTS								601,068	

** PROJECT DIRECT SUMMARY - Facility **

	QUANTITY	UOM	MANHRS	LABOR	EQUIPMNT	MATERIAL	SUBCONT	TOTAL COST	UNIT COST
60 On-Site Consolidation									
60.10 Place and Compact Material	50000.00	CY	0	145,031	113,400	0	0	258,431	5.17
60.15 ALLOWANCE Down Time			0	0	39,900	0	0	39,900	
TOTAL On-Site Consolidation			0	145,031	153,300	0	0	298,331	
TOTAL GE-Pittsfield EE/CA Alt. #01	1.00	EA	0	145,031	153,300	0	0	298,331	298331.04
Contractor Management								29,833	
SUBTOTAL								328,164	
Field Overhead								19,690	
SUBTOTAL								347,854	
Home Office Overhead								52,178	
SUBTOTAL								400,032	
Profit								20,002	
TOTAL INCL INDIRECTS								420,034	
Contingency								105,008	
SUBTOTAL								525,042	
Engineering and Design								31,503	
SUBTOTAL								556,545	
USACE Construction Management								44,524	
TOTAL INCL OWNER COSTS								601,068	

60.10. Place and Compact Material	QUANTY	UOM	MANHRS	LABOR	EQUIPMNT	MATERIAL	SUBCONT	TOTAL COST	UNIT COST
60. On-Site Consolidation									
On-site consolidation of 50,000 cy of material.									
60.10. Place and Compact Material									
USR GC Dozer			0.00	0.00	4500.00	0.00	0.00	4500.00	
	13.50	MO	0	0	60,750	0	0	60,750	4500.00
USR GC Compactor			0.00	0.00	3900.00	0.00	0.00	3900.00	
	13.50	MO	0	0	52,650	0	0	52,650	3900.00
USR GC Operator			0.00	30.52	0.00	0.00	0.00	30.52	
	4752.00	HR	0	145,031	0	0	0	145,031	30.52
TOTAL Place and Compact Material	50000	CY	0	145,031	113,400	0	0	258,431	5.17

60.15. ALLOWANCE Down Time	QUANTY	UOM	MANHRS	LABOR	EQUIPMNT	MATERIAL	SUBCONT	TOTAL COST	UNIT COST
60.15. ALLOWANCE Down Time									
Assume down time 13.5 months x 30% = 5.5 months.									
USR GC Dozer			0.00	0.00	4500.00	0.00	0.00	4500.00	
	5.40	MO	0	0	24,300	0	0	24,300	4500.00
USR GC Compactor			0.00	0.00	3900.00	0.00	0.00	3900.00	
	4.00	MO	0	0	15,600	0	0	15,600	3900.00
TOTAL ALLOWANCE Down Time			0	0	39,900	0	0	39,900	
TOTAL On-Site Consolidation			0	145,031	153,300	0	0	298,331	
TOTAL GE-Pittsfield EE/CA Alt. #01	1.00	EA	0	145,031	153,300	0	0	298,331	298331.04

SOURCES OF COST INFORMATION

Description	Class	Base	Fringe	Subtotal	Taxes	Weston	Subtotal	G&A	Total
PREVAILING WAGE RATE					13%	0%		0.0%	
Laborer		$ 14.75	$ 6.90	$ 21.65	$ 1.92	$ -	$ 23.57	$ -	$ 23.57
	OT	$ 22.13	$ 6.90	$ 29.03	$ 2.88	$ -	$ 31.90	$ -	$ 31.90
Electrician		$ 27.10	$ -	$ 27.10	$ 3.52	$ -	$ 30.62	$ -	$ 30.62
	OT	$ 40.65	$ -	$ 40.65	$ 5.28	$ -	$ 45.93	$ -	$ 45.93
Operator	Backhoe	$ 21.12	$ 6.65	$ 27.77	$ 2.75	$ -	$ 30.52	$ -	$ 30.52
	OT	$ 31.68	$ 6.65	$ 38.33	$ 4.12	$ -	$ 42.45	$ -	$ 42.45
Steamfitter/Pipefitter		$ 20.70	$ 7.46	$ 28.16	$ 2.69	$ -	$ 30.85	$ -	$ 30.85
	OT	$ 31.05	$ 7.46	$ 38.51	$ 4.04	$ -	$ 42.55	$ -	$ 42.55
Structural Steel				$ -	$ -	$ -	$ -	$ -	$ -
	OT			$ -	$ -	$ -	$ -	$ -	$ -
Truck Driver	Euclid	$ 21.20	$ 7.96	$ 29.16	$ 2.76	$ -	$ 31.92	$ -	$ 31.92
	OT	$ 31.80	$ 7.96	$ 39.76	$ 4.13	$ -	$ 43.89	$ -	$ 43.89

Pittsfield, Massachusetts — Berkshire County

Current Census Figures 48,622

Building Construction Trades	Local Union No.	July 1, 1997 Total Wage Rate	July 1, 1997 30 City %	July 1, 1998 Total Wage Rate	July 1, 1998 30 City %	January 1, 1999 Base Wage Rate	January 1, 1999 Fringe Benefit Package	January 1, 1999 Total Wage Rate	January 1, 1999 30 City %	Additional Increments for 1999 and Beyond: Second Increment Term/Start Date	Second Increment Total Rate	Third Increment Term/Start Date	Third Increment Total Rate	Third Increment Term Date
Common Building Laborers	473	21.65	102.6	21.65	99.9	14.75	6.90	21.65	99.7	05/31/99				
Air Tool Laborers	473	22.40	105.5	22.40	102.6	15.50	6.90	22.40	102.5	05/31/99				
Asbestos/Insulation Workers/Pipe Coverers	43	E29.26	97.8	29.26	95.8	20.93	8.33	29.26	95.2	08/31/99E				
Boilermakers	29	34.76	109.0	34.88	106.6	24.54	10.86	35.40	106.5	09/30/99				
Bricklayers	20	25.74	94.1	25.74	92.2	18.62	7.12	25.74	92.0	05/31/99				
Helpers	473	21.90	103.0	21.90	100.4	15.00	6.90	21.90	100.2	05/31/99				
Carpenters	108	E27.58	102.6	27.58	100.1	18.94	8.64	27.58	100.0	07/31/99E				
Carpet & Linoleum Layers	260	E28.30	109.9	28.30	107.6	19.46	8.84	28.30	107.2	07/31/99E				
Cement Finishers	20	25.74	99.6	25.74	97.7	18.62	7.12	25.74	97.6	05/31/99				
Electricians	284	E27.10	87.0	27.10	84.3			27.10	83.7	06/30/99E				
Elevator Constructors	41	35.66	110.0	35.66	107.0	27.35	8.31	35.66	106.2	09/30/99				
Equipment Operators, Crane or Shovel	98	28.03	97.0	28.03	95.1	21.38	6.65	28.03	95.1	05/31/99				
Equipment Operators, Medium Equipment	98	27.77	99.4	27.77	97.8	21.12	6.65	27.77	97.8	05/31/99				
Equipment Operators, Light Equipment	98	27.57	103.1	27.57	101.4	20.92	6.65	27.57	101.3	05/31/99				
Equipment Operators, Oilers	98	23.57	99.3	23.57	98.0	16.92	6.65	23.57	97.9	05/31/99				
Equipment Operators, Master Mechanics	98	28.94	98.0	28.94	96.3	22.29	6.65	28.94	96.2	05/31/99				
Glaziers	369	E27.83	106.8	27.83	104.2	20.85	6.98	27.83	103.8	09/23/99E				
Lathers	176	E24.13	90.9	24.13	89.6	17.49	6.64	24.13	89.5	11/30/99E				
Marble Setters	20	25.74	95.0	25.74	93.0	18.62	7.12	25.74	92.8	05/31/99				
Mosaic & Terrazzo Workers	20	25.74	97.2	25.74	96.0	18.62	7.12	25.74	96.0	05/31/99				
Helpers	97	E35.15	162.3	35.15	159.8	30.30	4.85	35.15	159.8	12/31/99E				
Millwrights	1121	33.70	119.5	34.88	120.7	23.33	12.15	35.48	122.6	04/01/99	36.06	09/30/99		
Painters, Ordinary	257	24.13	98.2	24.13	96.6	17.96	6.17	24.13	96.5	06/30/99				
Painters, Spray	257	E25.27	100.2	25.27	98.7	20.33	4.94	25.27	98.6	11/30/99E				
Painters, Structural Steel	257	E25.27	98.3	25.27	97.1	20.33	4.94	25.27	97.0	11/30/99E				
Paper Hangers	257	E23.48	94.5	23.48	93.2	17.46	6.02	23.48	93.1	06/30/99E				
Pile Drivers	56	E30.79	114.4	30.79	112.3	21.65	9.14	30.79	112.2	07/31/99E				
Plasterers	20	25.74	101.2	25.74	98.9	18.62	7.12	25.74	98.3	05/31/99				
Helpers	473	E22.85	107.3	22.85	104.9	16.65	6.20	22.85	104.6	06/30/99E				
Plumbers	151	E28.16	87.8	28.16	86.1	20.70	7.46	28.16	85.6	06/30/99E				
Helpers	297	E18.12	77.3	18.12	76.6			18.12	76.5	06/30/99E				
Rodmen (Reinforcing)	12	27.97	94.1	29.14	95.5	19.75	9.39	29.14	95.0	04/30/99				
Roofers, Composition	248	25.92	108.8	25.92	106.2	16.85	9.07	25.92	105.9	06/30/99				
Helpers	248	E14.20	79.3	14.20	77.5			14.20	77.4	05/31/99E				
Roofers, Precast	248	26.70	111.7	26.70	109.0	17.63	9.07	26.70	108.7	06/30/99				
Roofers, Tile & Slate	248	26.70	111.6	26.70	108.8	17.63	9.07	26.70	108.6	06/30/99				
Sheet Metal Workers	63	E30.01	96.8	30.01	94.0			30.01	93.6	06/30/99E				
Sprinkler Installers	669	E37.26	115.5	37.26	114.0	31.50	5.76	37.26	113.6	12/31/99E				
Steamfitters or Pipefitters	151	E28.16	87.1	28.16	85.2	20.70	7.46	28.16	85.0	06/30/99E				
Stone Masons	20	25.74	93.8	25.74	92.1	18.62	7.12	25.74	91.9	05/31/99				
Structural Steel Workers	12	27.97	93.2	29.14	94.6	19.75	9.39	29.14	94.1	04/30/99				
Welders, Structural Steel	12	27.97	93.2	29.14	94.6	19.75	9.39	29.14	94.1	04/30/99				
Tile Layers	20	25.74	97.4	25.74	95.6	18.62	7.12	25.74	95.5	05/31/99				
Helpers	97	E31.50	147.9	31.50	144.7	21.40	10.10	31.50	144.6	12/31/99E				
Truck Drivers, Light	379	26.96	124.9	28.99	131.7	21.03	7.96	28.99	131.7	05/31/99				
Truck Drivers, Heavy	379	27.13	123.6	29.16	130.3	21.20	7.96	29.16	130.3	05/31/99				
Skilled Trade Average		27.90	100.4	28.04	98.8			28.07	98.6					

Pittsfield, Massachusetts

1999 R.S. Means Co., Inc. Kingston, MA 02364

E = Estimate Wage Rate

015 500 | Access Roads

			CREW	DAILY OUTPUT	LABOR-HOURS	UNIT	1999 BARE COSTS MAT.	LABOR	EQUIP.	TOTAL	TOTAL INCL O&P	
552	0010	**ROADS AND SIDEWALKS** Temporary										552
	0050	Roads, gravel fill, no surfacing, 4" gravel depth	B-14	715	.067	S.Y.	1.10	1.53	.31	2.94	3.94	
	0100	8" gravel depth	"	615	.078	"	2.20	1.77	.36	4.33	5.60	
	1000	Ramp, 3/4" plywood on 2" x 6" joists, 16" O.C.	2 Carp	300	.053	S.F.	1.45	1.46		2.91	3.89	
	1100	On 2" x 10" joists, 16" O.C.	"	275	.058		1.75	1.59		3.34	4.43	
	2200	Sidewalks, 2" x 12" planks, 2 uses	1 Carp	350	.023		.55	.62		1.17	1.59	
	2300	Exterior plywood, 2 uses, 1/2" thick		750	.011		.30	.29		.59	.79	
	2400	5/8" thick		650	.012		.35	.34		.69	.92	
	2500	3/4" thick		600	.013		.42	.36		.78	1.03	

015 600 | Temporary Controls

602	0010	**TARPAULINS** Cotton duck, 10 oz. to 13.13 oz. per S.Y., minimum				S.F.	.38			.38	.42	602
	0050	Maximum					.55			.55	.61	
	0100	Polyvinyl coated nylon, 14 oz. to 18 oz., minimum					.45			.45	.50	
	0150	Maximum					.65			.65	.71	
	0200	Reinforced polyethylene 3 mils thick, white					.10			.10	.11	
	0300	4 mils thick, white, clear or black					.12			.12	.13	
	0400	5.5 mils thick, clear					.09			.09	.10	
	0500	White, fire retardant					.16			.16	.18	
	0600	7.5 mils, oil resistant, fire retardant					.17			.17	.19	
	0700	8.5 mils, black					.22			.22	.24	
	0710	Woven polyethylene, 6 mils thick					.45			.45	.50	
	0730	Polyester reinforced w/ integral fastening system 11 mils thick					1			1	1.10	
	0740	Mylar polyester, non-reinforced, 7 mils thick					1.10			1.10	1.21	

015 800 | Project Signs

804	0010	**SIGNS** Hi-intensity reflectorized, no posts, buy				S.F.	12.05			12.05	13.25	804

015 900 | Field Offices & Sheds

904	0010	**OFFICE** Trailer, furnished, no hookups, 20' x 8', buy	2 Skwk	1	16	Ea.	5,075	450		5,525	6,275	904
	0250	Rent per month					134			134	148	
	0300	32' x 8', buy	2 Skwk	.70	22.857		7,825	640		8,465	9,625	
	0350	Rent per month					158			158	174	
	0400	50' x 10', buy	2 Skwk	.60	26.667		13,400	750		14,150	15,900	
	0450	Rent per month					273			273	300	
	0500	50' x 12', buy	2 Skwk	.50	32		15,800	900		16,700	18,800	
	0550	Rent per month					315			315	345	
	0700	For air conditioning, rent per month, add					35.50			35.50	39	
	0800	For delivery, add per mile				Mile	1.50			1.50	1.65	
	1000	Portable buildings, prefab, on skids, economy, 8' x 8'	2 Carp	265	.060	S.F.	80	1.65		81.65	90.50	
	1100	Deluxe, 8' x 12'	"	150	.107	"	87	2.91		89.91	100	
	1200	Storage boxes, 20' x 8', buy	2 Skwk	1.80	8.889	Ea.	3,200	249		3,449	3,925	
	1250	Rent per month					66.50			66.50	73.50	
	1300	40' x 8', buy	2 Skwk	1.40	11.429		3,325	320		3,645	4,175	
	1350	Rent per month					85			85	93.50	

016 400 | Equipment Rental

			UNIT	HOURLY OPER. COST	RENT PER DAY	RENT PER WEEK	RENT PER MONTH	CREW EQUIPMENT COST/DAY
408	2900	Rake, spring tooth, with tractor (R016-410)	Ea.	7.36	267	800	2,400	218.90
	3000	Roller, tandem, gas, 3 to 5 ton		6.23	172	515	1,550	152.85
	3050	Diesel, 8 to 12 ton (R022-240)		9.01	288	865	2,600	245.10
	3100	Towed type, vibratory, gas 12.5 H.P., 2 ton		3.86	137	410	1,225	112.90
	3150	Sheepsfoot, double 60" x 60" (R022-250)		4.74	145	435	1,300	124.90
	3200	Pneumatic tire diesel roller, 12 ton		8.65	292	875	2,625	244.20
	3250	21 to 25 ton		15.97	345	1,030	3,100	333.75
	3300	Sheepsfoot roller, self-propelled, 4 wheel, 130 H.P.		20.96	650	1,955	5,875	558.70
	3320	300 H.P.		26.68	765	2,300	6,900	673.45
	3350	Vibratory steel drum & pneumatic tire, diesel, 18,000 lb.		11.48	435	1,300	3,900	351.85
	3400	29,000 lb.		12.72	535	1,600	4,800	421.75
	3410	Rotary mower, brush, 60", with tractor		8.56	233	700	2,100	208.50
	3450	Scrapers, towed type, 9 to 12 C.Y. capacity		3.19	86.50	260	780	77.50
	3500	12 to 17 C.Y. capacity		5.93	258	775	2,325	202.45
	3550	Scrapers, self-propelled, 4 x 4 drive, 2 engine, 14 C.Y. capacity		60.87	1,875	5,650	17,000	1,617
	3600	2 engine, 24 C.Y. capacity		73.95	2,200	6,600	19,800	1,912
	3650	Self-loading, 11 C.Y. capacity		27.32	785	2,350	7,050	688.55
	3700	22 C.Y. capacity		33.07	1,200	3,600	10,800	984.55
	3710	Screening plant 110 hp. w / 5' x 10'screen		15.97	435	1,300	3,900	387.75
	3720	5' x 16' screen		17.61	515	1,550	4,650	450.90
	3850	Shovels, see Cranes division 016-460						
	3860	Shovel/backhoe bucket, 1/2 C.Y.	Ea.	1.13	76.50	230	690	55.05
	3870	3/4 C.Y.		3.19	128	385	1,150	102.50
	3880	1 C.Y.		3.50	172	515	1,550	131
	3890	1-1/2 C.Y.		4.21	210	630	1,900	159.70
	3910	3 C.Y.		7.52	400	1,200	3,600	300.15
	3950	Stump chipper, 18" deep, 30 H.P.		1.80	247	740	2,225	162.40
	4110	Tractor, crawler, with bulldozer, torque converter, diesel 75 H.P.		10.97	365	1,100	3,300	307.75
	4150	105 H.P.		14.68	500	1,500	4,500	417.45
	4200	140 H.P.		17	615	1,850	5,550	506
	4260	200 H.P.		29.87	1,000	3,000	9,000	838.95
	4310	300 H.P.		38.83	1,375	4,100	12,300	1,131
	4360	410 H.P.		47.48	1,675	5,000	15,000	1,380
	4380	700 H.P.		95.58	3,325	10,000	30,000	2,765
	4400	Loader, crawler, torque conv., diesel, 1-1/2 C.Y., 80 H.P.		12.51	415	1,250	3,750	350.10
	4450	1-1/2 to 1-3/4 C.Y., 95 H.P.		14.96	465	1,400	4,200	399.70
	4510	1-3/4 to 2-1/4 C.Y., 130 H.P.		18.80	600	1,800	5,400	511.40
	4530	2-1/2 to 3-1/4 C.Y., 190 H.P.		30.64	1,025	3,100	9,300	865.10
	4560	3-1/2 to 5 C.Y., 275 H.P.		42.81	1,325	4,000	12,000	1,142
	4610	Tractor loader, wheel, torque conv., 4 x 4, 1 to 1-1/4 C.Y., 65 H.P.		9.33	283	850	2,550	244.65
	4620	1-1/2 to 1-3/4 C.Y., 80 H.P.		11.89	375	1,125	3,375	320.10
	4650	1-3/4 to 2 C.Y., 100 H.P.		12.47	405	1,215	3,650	342.75
	4710	2-1/2 to 3-1/2 C.Y., 130 H.P.		18.81	500	1,500	4,500	450.50
	4730	3 to 4-1/2 C.Y., 170 H.P.		20.86	685	2,050	6,150	576.90
	4760	5-1/4 to 5-3/4 C.Y., 270 H.P.		38.31	1,025	3,100	9,300	926.50
	4810	7 to 8 C.Y., 375 H.P.		56.88	1,375	4,125	12,400	1,280
	4870	12-1/2 C.Y., 690 H.P.		115.60	2,400	7,200	21,600	2,365
	4880	Wheeled, skid steer, 10 C.F., 30 H.P. gas		4.53	125	375	1,125	111.25
	4890	1 C.Y., 78 H.P., diesel		6.28	300	900	2,700	230.25
	4891	Attachments for all skid steer loaders						
	4892	Auger	Ea.	.12	83.50	250	750	50.95
	4893	Backhoe		.15	110	330	990	67.20
	4894	Broom		.16	107	320	960	65.30
	4895	Forks		.08	38.50	115	345	23.65
	4896	Grapple		.12	86.50	260	780	52.95
	4897	Concrete hammer		.25	180	540	1,625	110
	4898	Tree spade		.36	128	385	1,150	79.90
	4899	Trencher		.41	240	720	2,150	147.30

016 400 | Equipment Rental

			UNIT	HOURLY OPER. COST	RENT PER DAY	RENT PER WEEK	RENT PER MONTH	CREW EQUIPMENT COST/DAY
420	3440	Rotary beacon with rod and sensor (R021-620)	Ea.		103	310	930	62
	3460	Builders level with tripod and rod			30	90	270	18
	3500	Light towers, towable, with diesel generator, 2000 watt (R022-220)		1.55	117	350	1,050	82.40
	3600	4000 watt		1.97	137	410	1,225	97.75
	3700	Mixer, powered, plaster and mortar, 6 C.F., 7 H.P.		.82	53.50	160	480	38.55
	3800	10 C.F., 9 H.P.		1.22	76.50	230	690	55.75
	3900	Paint sprayers complete, 8 CFM		.08	41.50	125	375	25.65
	4000	17 CFM		.08	60	180	540	36.65
	4020	Pavers, bituminous, rubber tires, 8' wide, 52 H.P., gas		14.94	575	1,725	5,175	464.50
	4030	8' wide, 64 H.P., diesel		15.45	1,000	3,025	9,075	728.60
	4050	Crawler, 10' wide, 78 H.P., gas		22.20	1,400	4,200	12,600	1,018
	4060	10' wide, 87 H.P., diesel		22.80	1,075	3,200	9,600	822.40
	4070	Concrete paver, 12' to 24' wide, 250 H.P.		24.27	1,525	4,550	13,700	1,104
	4080	Placer-spreader-trimmer, 24' wide, 300 H.P.		32.02	1,775	5,325	16,000	1,321
	4100	Pump, centrifugal gas pump, 1-1/2", 4 MGPH		.46	31.50	95	285	22.70
	4200	2", 8 MGPH		.52	35	105	315	25.15
	4300	3", 15 MGPH		1.24	46.50	140	420	37.90
	4400	6", 90 MGPH		9.68	137	410	1,225	159.45
	4500	Submersible electric pump, 1-1/4", 55 GPM		.36	36.50	110	330	24.90
	4600	1-1/2", 83 GPM		.39	40	120	360	27.10
	4700	2", 120 GPM		.41	45	135	405	30.30
	4800	3", 300 GPM		.72	55	165	495	38.75
	4900	4", 560 GPM		1.18	68.50	205	615	50.45
	5000	6", 1590 GPM		5.36	207	620	1,850	166.90
	5100	Diaphragm pump, gas, single, 1-1/2" diameter		.49	25	75	225	18.90
	5200	2" diameter		.52	41.50	125	375	29.15
	5300	3" diameter		.77	45	135	405	33.15
	5400	Double, 4" diameter		1.55	86.50	260	780	64.40
	5500	Trash pump, self-priming, gas, 2" diameter		1.24	40	120	360	33.90
	5600	Diesel, 4" diameter		1.96	96.50	290	870	73.70
	5650	Diesel, 6" diameter		5.03	162	485	1,450	137.25
	5660	Rollers, see division 016-408						
	5700	Salamanders, L.P. gas fired, 100,000 B.T.U.	Ea.	.70	21.50	65	195	18.60
	5720	Sandblaster, portable, open top, 3 C.F. capacity		.19	50	150	450	31.50
	5730	6 C.F. capacity		.33	60	180	540	38.65
	5740	Accessories for above		.06	16.65	50	150	10.50
	5800	Saw, chain, gas engine, 18" long		.54	38.50	115	345	27.30
	5900	36" long		1.13	73.50	220	660	53.05
	5950	60" long		1.15	83.50	250	750	59.20
	6000	Masonry, table mounted, 14" diameter, 5 H.P.		1.82	50	150	450	44.55
	6050	Saw, portable cut-off, 8 H.P.		.82	58.50	175	525	41.55
	6100	Circular, hand held, electric, 7-1/4" diameter		.16	20	60	180	13.30
	6200	12" diameter		.27	36.50	110	330	24.15
	6275	Shot blaster, walk behind, 20" wide		1.49	200	600	1,800	131.90
	6300	Steam cleaner, 100 gallons per hour		.43	51.50	155	465	34.45
	6310	200 gallons per hour		.70	58.50	175	525	40.60
	6350	Torch, cutting, acetylene-oxygen, 150' hose		7.53	25	75	225	75.25
	6360	Hourly operating cost includes tips and gas		7.62				60.95
	6410	Toilet, portable chemical			15	45	135	9
	6420	Recycle flush type			18.35	55	165	11
	6430	Toilet, fresh water flush, garden hose,			21.50	65	195	13
	6440	Hoisted, non-flush, for high rise			18.35	55	165	11
	6450	Toilet, trailers, minimum			33.50	100	300	20
	6460	Maximum			100	300	900	60
	6470	Trailer, office, see division 015-904						
	6500	Trailers, platform, flush deck, 2 axle, 25 ton capacity	Ea.	1.39	123	370	1,100	85.10
	6600	40 ton capacity		1.71	228	685	2,050	150.70
	6700	3 axle, 50 ton capacity		2.85	243	730	2,200	168.80

016 400 | Equipment Rental

			UNIT	HOURLY OPER. COST	RENT PER DAY	RENT PER WEEK	RENT PER MONTH	CREW EQUIPMENT COST/DAY	
'0	4100	310 HP	Ea.	16.02	1.450	4.325	13.000	993.15	440
	4200	Cold mix paver, incl pug mill and bitumen tank,							
	4220	165 HP		32.45	1,950	5,875	17,600	1.435	
	4250	Paver, asphalt, wheel or crawler, 130 H.P., diesel		28.58	1,775	5,350	16.100	1.299	
	4300	Paver, road widener, gas 1' to 6', 67 HP		16.49	715	2,150	6,450	561.90	
	4400	Diesel, 2' to 14', 88 HP		18.75	865	2,600	7,800	670	
	4600	Slipform pavers, curb and gutter, 2 track, 75 HP		11.74	600	1.800	5.400	453.90	
	4700	4 track, 165 HP		19.47	1,250	3.750	11.300	905.75	
	4800	Median barrier, 215 HP		21.73	1,175	3,500	10,500	873.85	
	4901	Trailer, low bed, 75 ton capacity		19.47	380	1.140	3.425	383.75	
	5000	Road planer, walk behind, 10" cutting width, 10 HP		1.73	48.50	145	435	42.85	
	5100	Self propelled, 12" cutting width, 64 HP		14.03	615	1,850	5,550	482.25	
	5200	Pavement profiler, 4' to 6' wide, 450 HP		74.48	3,675	11,000	33,000	2,796	
	5300	8' to 10' wide, 750 HP		91.38	4,500	13,500	40,500	3,431	
	5400	Roadway plate, steel, 1"x8'x20'			6.65	20	60	4	
	5600	Stabilizer,self-propelled, 150 HP		17.28	805	2,420	7,250	622.25	
	5700	310 HP		17.13	935	2,800	8,400	697.05	
	5800	Striper, thermal, truck mounted 120 gal. paint, 150H.P.		8.59	292	875	2,625	243.70	
	6000	Tar kettle, 330 gal., trailer mounted		.62	30	90	270	22.95	
	7800	Windrow loader, elevating		18.73	1.275	3,850	11,600	919.85	
460	0010	**LIFTING AND HOISTING EQUIPMENT RENTAL** R015-010							460
	0100	without operators							
	0120	Aerial lift truck R022-250	Ea.	16.19	735	2,200	6,600	569.50	
	0140	Boom truck		15.35	220	660	1,975	254.80	
	0150	Crane, flatbed mntd, 3 ton cap.		15.35	267	800	2,400	282.80	
	0600	Crawler, cable, 1/2 C.Y., 15 tons at 12' radius		19	535	1,600	4,800	472	
	0700	3/4 C.Y., 20 tons at 12' radius		20.20	550	1,650	4,950	491.60	
	0800	1 C.Y., 25 tons at 12' radius		20.85	565	1,700	5,100	506.80	
	0900	Crawler, cable, 1-1/2 C.Y., 40 tons at 12' radius		30.54	765	2,300	6,900	704.30	
	1000	2 C.Y., 50 tons at 12' radius		35.59	935	2,800	8,400	844.70	
	1100	3 C.Y., 75 tons at 12' radius		43.66	965	2,900	8,700	929.30	
	1200	100 ton capacity, standard boom		41.43	1,325	4,000	12,000	1,131	
	1300	165 ton capacity, standard boom		64.77	2,175	6,500	19,500	1,818	
	1400	200 ton capacity, 150' boom		120.73	2,325	7,000	21,000	2,366	
	1500	450' boom		135.50	3,000	9,000	27,000	2,884	
	1600	Truck mounted, cable operated, 6 x 4, 20 tons at 10' radius		14.07	665	2,000	6,000	512.55	
	1700	25 tons at 10' radius		20.80	1,075	3,200	9,600	806.40	
	1800	8 x 4, 30 tons at 10' radius		28.61	600	1,800	5,400	588.90	
	1900	40 tons at 12' radius		29.34	765	2,300	6,900	694.70	
	2000	8 x 4, 60 tons at 15' radius		44.87	900	2,700	8,100	898.95	
	2050	82 tons at 15' radius		45.56	1,625	4,900	14,700	1,344	
	2100	90 tons at 15' radius		48.95	1,025	3,100	9,300	1,012	
	2200	115 tons at 15' radius		51.15	1,875	5,600	16,800	1,529	
	2300	150 tons at 18' radius		76.61	1,575	4,700	14,100	1,553	
	2350	165 tons at 18' radius		77.65	2,200	6,600	19,800	1,941	
	2400	Truck mounted, hydraulic, 12 ton capacity		22.93	435	1,300	3,900	443.45	
	2500	25 ton capacity		23.67	600	1,800	5,400	549.35	
	2550	33 ton capacity		24.37	835	2,500	7,500	694.95	
	2560	40 ton hydraulic truck crane		24.42	860	2,575	7,725	710.35	
	2600	55 ton capacity		34.14	865	2,600	7,800	793.10	
	2700	80 ton capacity		37.29	1,325	4,000	12,000	1,098	
	2800	Self-propelled, 4 x 4, with telescoping boom, 5 ton		10.18	315	950	2,850	271.45	
	2900	12-1/2 ton capacity		16.42	435	1,300	3,900	391.35	
	3000	15 ton capacity		18.20	485	1,450	4,350	435.60	
	3100	25 ton capacity		20.99	635	1,900	5,700	547.90	
	3200	Derricks, guy, 20 ton capacity, 60' boom, 75' mast		8.70	292	875	2,625	244.60	
	3300	100' boom, 115' mast		16.39	515	1,550	4,650	441.10	
	3400	Stiffleg, 20 ton capacity, 70' boom, 37' mast		11.56	385	1,150	3,450	322.50	

020 550 | Site Demolition

			CREW	DAILY OUTPUT	LABOR-HOURS	UNIT	1999 BARE COSTS MAT.	LABOR	EQUIP.	TOTAL	TOTAL INCL O&P	
554	1600	Median barrier, precast concrete, remove and store	B-3	430	.112	L.F.		2.59	4.07	6.66	8.50	554
	1610	Remove and reset	"	390	.123	"		2.85	4.49	7.34	9.35	
	1710	Pavement removal, bituminous roads, 3" thick	B-38	690	.058	S.Y.		1.41	1.48	2.89	3.82	
	1750	4" to 6" thick		420	.095			2.32	2.43	4.75	6.25	
	1800	Bituminous driveways		640	.063			1.52	1.59	3.11	4.11	
	1900	Concrete to 6" thick, hydraulic hammer, mesh reinforced		255	.157			3.83	4	7.83	10.35	
	2000	Rod reinforced		200	.200	▼		4.88	5.10	9.98	13.15	
	2100	Concrete, 7" to 24" thick, plain		33	1.212	C.Y.		29.50	31	60.50	80	
	2200	Reinforced	▼	24	1.667	"		40.50	42.50	83	110	
	2300	With hand held air equipment, bituminous, to 6" thick	B-39	1,900	.025	S.F.		.57	.09	.66	1	
	2320	Concrete to 6" thick, no reinforcing		1,200	.040			.91	.15	1.06	1.59	
	2340	Mesh reinforced		1,400	.034			.78	.13	.91	1.36	
	2360	Rod reinforced	▼	765	.063	▼		1.43	.24	1.67	2.49	
	2400	Curbs, concrete, plain	B-6	360	.067	L.F.		1.56	.61	2.17	3.09	
	2500	Reinforced		275	.087			2.04	.80	2.84	4.05	
	2600	Granite		360	.067			1.56	.61	2.17	3.09	
	2700	Bituminous		528	.045			1.06	.41	1.47	2.11	
	2800	Wood		570	.042			.98	.38	1.36	1.95	
	2900	Pipe removal, sewer/water, no excavation, 12" diameter		175	.137			3.21	1.25	4.46	6.35	
	2930	15" diameter		150	.160			3.74	1.46	5.20	7.40	
	2960	24" diameter		120	.200			4.67	1.82	6.49	9.25	
	3000	36" diameter		90	.267			6.25	2.43	8.68	12.30	
	3200	Steel, welded connections, 4" diameter		160	.150			3.51	1.37	4.88	6.95	
	3300	10" diameter	▼	80	.300			7	2.74	9.74	13.90	
	3500	Railroad track removal, ties and track	B-13	330	.170	▼		3.94	1.66	5.60	8	
	3600	Ballast	B-14	500	.096	C.Y.		2.18	.44	2.62	3.89	
	3700	Remove and re-install, ties & track using new bolts & spikes		50	.960	L.F.		22	4.38	26.38	39	
	3800	Turnouts using new bolts and spikes	▼	1	48	Ea.		1,100	219	1,319	1,950	
	4000	Sidewalk removal, bituminous, 2-1/2" thick	B-6	325	.074	S.Y.		1.73	.67	2.40	3.42	
	4050	Brick, set in mortar		185	.130			3.03	1.18	4.21	6	
	4060	Dry set		270	.089			2.08	.81	2.89	4.11	
	4100	Concrete, plain, 4"		160	.150			3.51	1.37	4.88	6.95	
	4200	Mesh reinforced	▼	150	.160	▼		3.74	1.46	5.20	7.40	
	5000	Slab on grade removal, plain	B-5	45	1.244	C.Y.		29.50	23	52.50	71.50	
	5100	Mesh reinforced		33	1.697			40.50	31.50	72	97.50	
	5200	Rod reinforced	▼	25	2.240			53	42	95	129	
	5500	For congested sites or small quantities, add up to								200%	200%	
	5550	For disposal on site, add	B-11A	232	.069			1.72	3.62	5.34	6.65	
	5600	To 5 miles, add	B-34D	76	.105	▼		2.33	7.40	9.73	11.70	
558	0010	**HYDRODEMOLITION**, concrete pavement, 4000 PSI, 2" depth	B-5	500	.112	S.F.		2.66	2.09	4.75	6.45	558
	0120	4" depth		450	.124			2.95	2.32	5.27	7.15	
	0130	6" depth		400	.140			3.32	2.61	5.93	8	
	0410	6000 PSI, 2" depth		410	.137			3.24	2.55	5.79	7.85	
	0420	4" depth		350	.160			3.80	2.99	6.79	9.20	
	0430	6" depth		300	.187			4.43	3.49	7.92	10.75	
	0510	8000 PSI, 2" depth		330	.170			4.03	3.17	7.20	9.75	
	0520	4" depth		280	.200			4.74	3.73	8.47	11.50	
	0530	6" depth	▼	240	.233	▼		5.55	4.36	9.91	13.40	

020 600 | Building Demolition

604	0010	**BUILDING DEMOLITION** Large urban projects, incl. 20 Mi. haul										604
	0012	No foundation or dump fees, C.F. is volume of building standing, steel	B-8	21,500	.003	C.F.		.07	.11	.18	.23	
	0050	Concrete		15,300	.004			.10	.15	.25	.32	
	0080	Masonry	▼	20,100	.003	▼		.08	.11	.19	.25	

020 | Subsurface Investigation & Demolition

020 750 | Concrete Removal

		CREW	DAILY OUTPUT	LABOR-HOURS	UNIT	1999 BARE COSTS MAT.	LABOR	EQUIP.	TOTAL	TOTAL INCL O&P
0201	of tank with vacuum truck R020 -880									880
0300	3000 gal to 5000 gal tank	A-13	5	1.600	Ea.		43.50	105	148.50	181
0310	6000 gal to 8000 gal tank		4	2			54.50	131	185.50	227
0320	9000 gal to 12000 gal tank		3	2.667			72.50	175	247.50	300
0390	Dispose of sludge off-site, average				Gal.					4
0400	Insert solid carbon dioxide "dry ice" to produce inert gas									
0401	For cleaning/transporting tanks (1.5 lbs./100 gal. cap)	1 Clab	500	.016	Lb.	1.20	.34		1.54	1.86
1020	Haul tank to certified salvage dump, 100 miles round trip									
1023	3000 gal. to 5000 gal. tank				Ea.				550	630
1026	6000 gal. to 8000 gal. tank								650	750
1029	9,000 gal. to 12,000 gal. tank								875	1,000
1100	Disposal of contaminated soil to landfill									
1110	Minimum				C.Y.					100
1111	Maximum				"					300
1120	Disposal of contaminated soil to									
1121	bituminous concrete batch plant									
1130	Minimum				C.Y.					50
1131	Maximum				"					100
2010	Decontamination of soil on site incl poly tarp on top/bottom									
2011	Soil containment berm, and chemical treatment									
2020	Minimum	B-11C	100	.160	C.Y.	5.60	3.99	2.19	11.78	14.70
2021	Maximum	"	100	.160		7.25	3.99	2.19	13.43	16.55
2050	Disposal of decontaminated soil, minimum									60
2055	Maximum									125

SITE WORK 2

021 | Site Preparation & Excavation Support

021 100 | Site Clearing

		CREW	DAILY OUTPUT	LABOR-HOURS	UNIT	1999 BARE COSTS MAT.	LABOR	EQUIP.	TOTAL	TOTAL INCL O&P
104 0010	**CLEAR AND GRUB** Cut & chip light, trees to 6" diam.	B-7	1	48	Acre		1,100	1,175	2,275	3,025 104
0150	Grub stumps and remove	B-30	2	12			290	800	1,090	1,325
0160	Clear & grub brush including stumps	"	.58	41.379			1,000	2,750	3,750	4,550
0200	Cut & chip medium, trees to 12" diam.	B-7	.70	68.571			1,575	1,700	3,275	4,300
0250	Grub stumps and remove	B-30	1	24			580	1,600	2,180	2,625
0260	Clear & grub dense brush including stumps	"	.47	51.064			1,225	3,400	4,625	5,650
0300	Cut & chip heavy, trees to 24" diam.	B-7	.30	160			3,675	3,950	7,625	10,100
0350	Grub stumps and remove	B-30	.50	48			1,150	3,200	4,350	5,300
0400	If burning is allowed, reduce cut & chip									40%
3000	Chipping stumps, to 18" deep, 12" diam.	B-86	20	.400	Ea.		11.35	8.10	19.45	26.50
3040	18" diameter		16	.500			14.20	10.15	24.35	32.50
3080	24" diameter		14	.571			16.25	11.60	27.85	37.50
3100	30" diameter		12	.667			18.95	13.55	32.50	44
3120	36" diameter		10	.800			22.50	16.25	38.75	52.50
3160	48" diameter		8	1			28.50	20.50	49	65.50
5000	Tree thinning, feller buncher, conifer									
5080	Up to 8" diameter	B-93	240	.033	Ea.		.95	1.62	2.57	3.23
5120	12" diameter		160	.050			1.42	2.44	3.86	4.84
5240	Hardwood, up to 4" diameter		240	.033			.95	1.62	2.57	3.23
5280	8" diameter		180	.044			1.26	2.17	3.43	4.30
5320	12" diameter		120	.067			1.89	3.25	5.14	6.45
7000	Tree removal, congested area, aerial lift truck									

022 200 | Excav./Backfill/Compact.

			CREW	DAILY OUTPUT	LABOR-HOURS	UNIT	1999 BARE COSTS MAT.	LABOR	EQUIP.	TOTAL	TOTAL INCL O&P	
204	0800	Compaction in 12" layers, hand tamp, add to above (R022-220)	1 Clab	34	.235	C.Y.		5.05		5.05	7.95	204
	0900	Roller compaction operator walking, add	B-10A	150	.080			2.09	.62	2.71	3.88	
	1000	Air tamp, add	B-9	285	.140			3.07	.63	3.70	5.55	
	1100	Vibrating plate, add	A-1	90	.089			1.91	.76	2.67	3.84	
	3000	For flowable fill, see div. 033-126										
208	0010	**BACKFILL, STRUCTURAL** Dozer or F.E. loader										208
	0020	From existing stockpile, no compaction										
	2000	75 H.P., 50' haul, sand & gravel	B-10L	1,100	.011	C.Y.		.28	.28	.56	.75	
	2020	Common earth		975	.012			.32	.32	.64	.84	
	2040	Clay		850	.014			.37	.36	.73	.97	
	2200	150' haul, sand & gravel		550	.022			.57	.56	1.13	1.49	
	2220	Common earth		490	.024			.64	.63	1.27	1.67	
	2240	Clay		425	.028			.74	.72	1.46	1.93	
	2400	300' haul, sand & gravel		370	.032			.85	.83	1.68	2.21	
	2420	Common earth		330	.036			.95	.93	1.88	2.49	
	2440	Clay		290	.041			1.08	1.06	2.14	2.83	
	3000	105 H.P., 50' haul, sand & gravel	B-10W	1,350	.009			.23	.31	.54	.70	
	3020	Common earth		1,225	.010			.26	.34	.60	.76	
	3040	Clay		1,100	.011			.28	.38	.66	.86	
	3200	150' haul, sand & gravel		670	.018			.47	.62	1.09	1.41	
	3220	Common earth		610	.020			.51	.68	1.19	1.54	
	3240	Clay		550	.022			.57	.76	1.33	1.70	
	3300	300' haul, sand & gravel		465	.026			.67	.90	1.57	2.02	
	3320	Common earth		415	.029			.75	1.01	1.76	2.27	
	3340	Clay		370	.032			.85	1.13	1.98	2.54	
	4000	200 H.P., 50' haul, sand & gravel	B-10B	2,500	.005			.13	.34	.47	.56	
	4020	Common earth		2,200	.005			.14	.38	.52	.64	
	4040	Clay		1,950	.006			.16	.43	.59	.72	
	4200	150' haul, sand & gravel		1,225	.010			.26	.68	.94	1.14	
	4220	Common earth		1,100	.011			.28	.76	1.04	1.28	
	4240	Clay		975	.012			.32	.86	1.18	1.44	
	4400	300' haul, sand & gravel		805	.015			.39	1.04	1.43	1.75	
	4420	Common earth		735	.016			.43	1.14	1.57	1.91	
	4440	Clay		660	.018			.47	1.27	1.74	2.13	
	5000	300 H.P., 50' haul, sand & gravel	B-10M	3,170	.004			.10	.36	.46	.54	
	5020	Common earth		2,900	.004			.11	.39	.50	.60	
	5040	Clay		2,700	.004			.12	.42	.54	.64	
	5200	150' haul, sand & gravel		2,200	.005			.14	.51	.65	.79	
	5220	Common earth		1,950	.006			.16	.58	.74	.89	
	5240	Clay		1,700	.007			.18	.67	.85	1.01	
	5400	300' haul, sand & gravel		1,500	.008			.21	.75	.96	1.15	
	5420	Common earth		1,350	.009			.23	.84	1.07	1.28	
	5440	Clay		1,225	.010			.26	.92	1.18	1.41	
	6000	For compaction, see div. 022-226										
	6010	For trench backfill, see div. 022-254 & 258										
216	0010	**BORROW, LOADING AND/OR SPREADING**										216
	4000	Common earth, shovel, 1 C.Y. bucket	B-12N	840	.019	C.Y.	5.05	.51	.76	6.32	7.15	
	4010	1-1/2 C.Y. bucket	B-12O	1,135	.014		5.05	.38	.76	6.19	6.95	
	4020	3 C.Y. bucket	B-12T	1,800	.009		5.05	.24	.68	5.97	6.65	
	4030	Front end loader, wheel mounted										
	4050	3/4 C.Y. bucket	B-10R	550	.022	C.Y.	5.05	.57	.44	6.06	6.90	
	4060	1-1/2 C.Y. bucket	B-10S	970	.012		5.05	.32	.33	5.70	6.40	
	4070	3 C.Y. bucket	B-10T	1,575	.008		5.05	.20	.29	5.54	6.15	
	4080	5 C.Y. bucket	B-10U	2,600	.005		5.05	.12	.36	5.53	6.10	
	5000	Select granular fill, shovel, 1 C.Y. bucket	B-12N	925	.017		7.50	.46	.69	8.65	9.70	

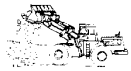

022 200 | Excav./Backfill/Compact.

			CREW	DAILY OUTPUT	LABOR-HOURS	UNIT	1999 BARE COSTS MAT.	LABOR	EQUIP.	TOTAL	TOTAL INCL O&P	
254	0300	1/2 C.Y. hydraulic excavator, truck mounted (R022-240)	B-12J	200	.080	C.Y.		2.14	3.18	5.32	6.75	254
	0500	6' to 10' deep, 3/4 C.Y. hydraulic backhoe, 6' to 10' deep	B-12F	225	.071			1.90	2	3.90	5.10	
	0510	1 C.Y. hydraulic backhoe	B-12A	400	.040			1.07	1.37	2.44	3.14	
	0600	1 C.Y. hydraulic excavator, truck mounted	B-12K	400	.040			1.07	2.01	3.08	3.85	
	0610	1-1/2 C.Y. hydraulic backhoe	B-12B	600	.027			.71	1.19	1.90	2.39	
	0620	2-1/2 C.Y. hydraulic backhoe	B-12S	1,000	.016			.43	1.70	2.13	2.51	
	0900	10' to 14' deep, 3/4 C.Y. hydraulic backhoe	B-12F	200	.080			2.14	2.25	4.39	5.70	
	0910	1 C.Y. hydraulic backhoe	B-12A	360	.044			1.19	1.52	2.71	3.48	
	1000	1-1/2 C.Y. hydraulic backhoe	B-12B	540	.030			.79	1.32	2.11	2.65	
	1020	2-1/2 C.Y. hydraulic backhoe	B-12S	1,000	.016			.43	1.70	2.13	2.51	
	1030	3 C.Y. hydraulic backhoe	B-12D	1,400	.011			.31	1.54	1.85	2.15	
	1300	14' to 20' deep, 1 C.Y. hydraulic backhoe	B-12A	320	.050			1.34	1.71	3.05	3.91	
	1310	1-1/2 C.Y. hydraulic backhoe	B-12B	480	.033			.89	1.48	2.37	2.98	
	1320	2-1/2 C.Y. hydraulic backhoe	B-12S	850	.019			.50	1.99	2.49	2.95	
	1330	3 C.Y. hydraulic backhoe	B-12D	1,000	.016			.43	2.16	2.59	3.02	
	1400	By hand with pick and shovel 2' to 6' deep, light soil	1 Clab	8	1			21.50		21.50	34	
	1500	Heavy soil	"	4	2			43		43	67.50	
	1700	For tamping backfilled trenches, air tamp, add	A-1	100	.080			1.72	.69	2.41	3.46	
	1900	Vibrating plate, add	B-18	230	.104			2.31	.23	2.54	3.58	
	2100	Trim sides and bottom for concrete pours, common earth		1,500	.016	S.F.		.35	.03	.38	.60	
	2300	Hardpan		600	.040	"		.88	.09	.97	1.49	
	2400	Pier and spread footing excavation, add to above				C.Y.				30%	30%	
	3000	Backfill trench, F.E. loader, wheel mtd., 1 C.Y. bucket										
	3020	Minimal haul	B-10R	400	.030	C.Y.		.78	.61	1.39	1.87	
	3040	100' haul		200	.060			1.56	1.22	2.78	3.75	
	3060	200' haul		100	.120			3.13	2.45	5.58	7.50	
	3080	2-1/4 C.Y. bucket, minimum haul	B-10T	600	.020			.52	.75	1.27	1.63	
	3090	100' haul		300	.040			1.04	1.50	2.54	3.25	
	3100	200' haul		150	.080			2.09	3	5.09	6.50	
	4000	For backfill with dozer, see div. 022-208										
	4010	For compaction of backfill, see div. 022-226										
258	0010	**EXCAVATING, UTILITY TRENCH** Common earth										258
	0050	Trenching with chain trencher, 12 H.P., operator walking										
	0100	4" wide trench, 12" deep	B-53	800	.010	L.F.		.27	.12	.39	.54	
	0150	18" deep		750	.011			.29	.13	.42	.58	
	0200	24" deep		700	.011			.31	.14	.45	.62	
	0300	6" wide trench, 12" deep		650	.012			.33	.15	.48	.67	
	0350	18" deep		600	.013			.36	.16	.52	.73	
	0400	24" deep		550	.015			.40	.18	.58	.79	
	0450	36" deep		450	.018			.48	.22	.70	.98	
	0600	8" wide trench, 12" deep		475	.017			.46	.20	.66	.93	
	0650	18" deep		400	.020			.54	.24	.78	1.10	
	0700	24" deep		350	.023			.62	.28	.90	1.26	
	0750	36" deep		300	.027			.73	.32	1.05	1.46	
	0830	Fly wheel trencher, 18" wide trench, 6' deep, light soil	B-54A	1,992	.005	C.Y.		.13	.20	.33	.42	
	0840	Medium soil		1,594	.006			.16	.25	.41	.53	
	0850	Heavy soil		1,295	.007			.20	.31	.51	.65	
	0860	24" wide trench, 9' deep, light soil	B-54B	4,981	.002			.06	.11	.17	.20	
	0870	Medium soil		4,000	.002			.07	.14	.21	.26	
	0880	Heavy soil		3,237	.003			.08	.17	.25	.32	
	1000	Backfill by hand including compaction, add										
	1050	4" wide trench, 12" deep	A-1	800	.010	L.F.		.21	.09	.30	.43	
	1100	18" deep		530	.015			.32	.13	.45	.65	
	1150	24" deep		400	.020			.43	.17	.60	.87	
	1300	6" wide trench, 12" deep		540	.015			.32	.13	.45	.64	

022 400 | Soil Stabilization

			CREW	DAILY OUTPUT	LABOR-HOURS	UNIT	1999 BARE COSTS MAT.	LABOR	EQUIP.	TOTAL	TOTAL INCL O&P	
412	2260	12" deep	B-74	1,550	.041	S.Y.	6.40	1.05	2.10	9.55	11	412
	5000	Soil poisoning (sterilization)	1 Clab	4,496	.002	S.F.	.03	.04		.07	.09	
	5100	Herbicide application from truck	B-59	19,000	.001	S.Y.		.01	.03	.04	.04	

022 500 | Vibroflotation

504	0010	**VIBROFLOTATION**										504
	0900	Vibroflotation compacted sand cylinder, minimum	B-60	750	.075	V.L.F.		1.86	1.34	3.20	4.33	
	0950	Maximum		325	.172			4.29	3.08	7.37	10	
	1100	Vibro replacement compacted stone cylinder, minimum		500	.112			2.79	2	4.79	6.50	
	1150	Maximum		250	.224			5.55	4.01	9.56	13	
	1300	Mobilization and demobilization, minimum		.47	119	Total		2,975	2,125	5,100	6,925	
	1400	Maximum		.14	400	"		9,950	7,150	17,100	23,200	

022 700 | Slope/Erosion Control

702	0010	**CUT DRAINAGE DITCH** Common earth, 30'w x 1'deep	B-11L	6,000	.003	L.F.		.07	.10	.17	.21	702
	0200	Clay and till		4,200	.004			.09	.14	.23	.30	
	0250	Clean wet drainage ditch, 30' wide		10,000	.002			.04	.06	.10	.12	
704	0010	**EROSION CONTROL** Jute mesh, 100 S.Y. per roll, 4' wide, stapled	B-80A	2,400	.010	S.Y.	.72	.21	.07	1	1.21	704
	0060	Nylon, 3 dimensional geomatrix, 9 mil thick		700	.034		3.85	.74	.26	4.85	5.70	
	0062	12 mil thick		515	.047		4	1	.35	5.35	6.35	
	0064	18 mil thick		460	.052		5	1.12	.39	6.51	7.70	
	0070	Paper biodegradable mesh	B-1	2,500	.010		.07	.21		.28	.41	
	0080	Paper mulch	B-64	20,000	.001		.05	.02	.01	.08	.11	
	0100	Plastic netting, stapled, 2" x 1" mesh, 20 mil	B-1	2,500	.010		.40	.21		.61	.77	
	0120	Revegetation mat, webbed	2 Clab	1,000	.016		2.88	.34		3.22	3.70	
	0160	Underdrain fabric, 18" x 100' roll	"	32	.500	Roll	16.50	10.75		27.25	35	
	0200	Polypropylene mesh, stapled, 6.5 oz./S.Y.	B-1	2,500	.010	S.Y.	1	.21		1.21	1.43	
	0300	Tobacco netting, or jute mesh #2, stapled	"	2,500	.010		.07	.21		.28	.41	
	0400	Soil sealant, liquid sprayed from truck	B-81	5,000	.005		.40	.12	.12	.64	.75	
	1000	Silt fence, polypropylene, 3' high, ideal conditions	2 Clab	1,600	.010	L.F.	.35	.21		.56	.73	
	1100	Adverse conditions	"	950	.017	"	.28	.36		.64	.88	
	1130	Cellular confinement, poly, 3-dimen, 8' x 20' panels, 4" deep cell	B-6	1,600	.015	S.F.	.89	.35	.14	1.38	1.67	
	1140	8" deep cells	"	1,200	.020	"	1.60	.47	.18	2.25	2.69	
	1200	Place and remove hay bales	A-2	3	8	Ton	50	172	57.50	279.50	335	
	1250	Hay bales, staked	"	1,800	.013	L.F.	6	.29	.10	6.39	7.15	
	1305	For less than 3 To 1 slope, add						15%				
	1310	For greater than 3 To 1 slope, add						25%				
706	0010	**MEMBRANE LINING SYSTEMS**, HDPE, 100,000 S.F. or more										706
	0100	30 mil thick	3 Skwk	1,850	.013	S.F.	.30	.36		.66	.90	
	0200	60 mil thick		1,600	.015		.60	.42		1.02	1.32	
	0300	120 mil thick		1,440	.017		1.20	.47		1.67	2.06	
708	0010	**RETAINING WALLS** Aluminized steel bin, excavation										708
	0020	and backfill not included, 10' wide										
	0100	4' high, 5.5' deep	B-13	650	.086	S.F.	14.50	2	.85	17.35	20	
	0200	8' high, 5.5' deep		615	.091		16.70	2.12	.89	19.71	22.50	
	0300	10' high, 7.7' deep		580	.097		17.55	2.24	.95	20.74	24	
	0400	12' high, 7.7' deep		530	.106		18.95	2.46	1.04	22.45	26	
	0500	16' high, 7.7' deep		515	.109		20	2.53	1.07	23.60	27	
	0600	16' high, 9.9' deep		500	.112		21	2.60	1.10	24.70	29	
	0700	20' high, 9.9' deep		470	.119		24	2.77	1.17	27.94	31.50	
	0800	20' high, 12.1' deep		460	.122		25.50	2.83	1.19	29.52	33.50	
	0900	24' high, 12.1' deep		455	.123		27	2.86	1.21	31.07	36	
	1000	24' high, 14.3' deep		450	.124		28	2.89	1.22	32.11	37	

022 700 | Slope/Erosion Control

		CREW	DAILY OUTPUT	LABOR-HOURS	UNIT	1999 BARE COSTS MAT.	LABOR	EQUIP.	TOTAL	TOTAL INCL O&P	
1100	28' high, 14.3' deep	B-13	440	.127	S.F.	29.50	2.96	1.25	33.71	38	708
1300	For plain galvanized bin type walls, deduct					10%					
1800	Concrete gravity wall with vertical face including excavation & backfill										
1850	No reinforcing										
1900	6' high, level embankment	C-17C	36	2.306	L.F.	43	65.50	11.45	119.95	163	
2000	33° slope embankment		32	2.594		40.50	74	12.85	127.35	175	
2200	8' high, no surcharge		27	3.074		55.50	87.50	15.25	158.25	216	
2300	33° slope embankment		24	3.458		67	98.50	17.15	182.65	248	
2500	10' high, level embankment		19	4.368		79.50	124	21.50	225	305	
2600	33° slope embankment		18	4.611		110	131	23	264	355	
2800	Reinforced concrete cantilever, incl. excavation, backfill & reinf.										
2900	6' high, 33° slope embankment	C-17C	35	2.371	L.F.	40.50	67.50	11.75	119.75	163	
3000	8' high, 33° slope embankment		29	2.862		47	81.50	14.20	142.70	195	
3100	10' high, 33° slope embankment		20	4.150		61	118	20.50	199.50	276	
3200	20' high, 500 lb. per L.F. surcharge		7.50	11.067		183	315	55	553	755	
3500	Concrete cribbing, incl. excavation and backfill										
3700	12' high, open face	B-13	210	.267	S.F.	20.50	6.20	2.62	29.32	35	
3900	Closed face	"	210	.267	"	19.05	6.20	2.62	27.87	33.50	
4100	Concrete filled slurry trench, see division 021-684										
4300	Stone filled gabions, not incl. excavation,										
4310	Stone, delivered, 3' wide										
4340	Galvanized, 6' long, 1' high	B-13	200	.280	Ea.	50	6.50	2.75	59.25	68	
4350	Galvanized, 6' high, 33° slope embankment		49	1.143	L.F.	20	26.50	11.20	57.70	76	
4400	1'-6" high		130	.431	Ea.	66	10	4.23	80.23	93	
4490	3'-0" high		55	1.018	"	120	23.50	10	153.50	180	
4500	Highway surcharge		27	2.074	L.F.	40	48	20.50	108.50	142	
4590	9' long, 1' high		130	.431	Ea.	70	10	4.23	84.23	97.50	
4600	9' high, up to 33° slope embankment		24	2.333	L.F.	45	54	23	122	159	
4650	1'-6" high		87	.644	Ea.	96.50	14.95	6.30	117.75	136	
4690	3'-0" high		37	1.514	"	165	35	14.85	214.85	253	
4700	Highway surcharge		16	3.500	L.F.	70	81.50	34.50	186	242	
4890	12' long, 1' high		100	.560	Ea.	95.50	13	5.50	114	132	
4900	12' high, up to 33° slope embankment		14	4	L.F.	70	93	39	202	265	
4950	1'-6" high		55	1.018	Ea.	125	23.50	10	158.50	186	
4990	3'-0" high		25	2.240	"	225	52	22	299	355	
5000	Highway surcharge		11	5.091	L.F.	100	118	50	268	350	
5200	PVC coated, 6' long, 1' high		200	.280	Ea.	55	6.50	2.75	64.25	73.50	
5250	1'-6" high		130	.431		72.50	10	4.23	86.73	100	
5300	3' high		55	1.018		129	23.50	10	162.50	190	
5500	9' long, 1' high		130	.431		83	10	4.23	97.23	112	
5550	1'-6" high		87	.644		107	14.95	6.30	128.25	148	
5600	3' high		37	1.514		191	35	14.85	240.85	281	
5800	12' long, 1' high		100	.560		108	13	5.50	126.50	146	
5850	1'-6" high		55	1.018		141	23.50	10	174.50	203	
5900	3' high		25	2.240		248	52	22	322	375	
5950	For PVC coating, add				L.F.	20%					
7100	Segmental wall system, incl backfill, compaction, to 8'										
7120	interlocking pins, no scaffolding, base, or tiebacks										
7140	8" x 18" x 21.5", 95 lbs	D-12	250	.128	S.F.	6.40	3.21		9.61	12.05	
7160	8" x 18" x 12.5", 85 lbs		330	.097		6.20	2.43		8.63	10.60	
7180	6" x 17.25" x 12", 72 lbs		375	.085		5.90	2.14		8.04	9.85	
7200	Beveled, 6" x 6" x 12", 68 lbs		350	.091		5.65	2.29		7.94	9.75	
7220	Step, 6" x 16" x 12", 85 lbs		300	.107		5.10	2.68		7.78	9.80	
7240	Caps, to 40 lbs		600	.053	L.F.	6.40	1.34		7.74	9.15	
7260	For reinforcing, add				S.F.				2	2.50	
8000	For higher walls, add components as necessary										

022 | Earthwork

022 700 | Slope/Erosion Control

			CREW	DAILY OUTPUT	LABOR-HOURS	UNIT	1999 BARE COSTS MAT.	LABOR	EQUIP.	TOTAL	TOTAL INCL O&P	
712	0010	**RIP-RAP** Random, broken stone										712
	0100	Machine placed for slope protection	B-12G	62	.258	C.Y.	17.75	6.90	8.40	33.05	39.50	
	0110	3/8 to 1/4 C.Y. pieces, grouted	B-13	80	.700	S.Y.	29	16.25	6.85	52.10	65	
	0200	18" minimum thickness, not grouted	"	53	1.057	"	13.15	24.50	10.35	48	64	
	0300	Dumped, 50 lb. average	B-11A	800	.020	Ton	10	.50	1.05	11.55	13.90	
	0350	100 lb. average		700	.023		14.30	.57	1.20	16.07	19.95	
	0370	300 lb. average		600	.027		16.65	.66	1.40	18.71	23	
	0400	Gabions, galvanized steel mesh mats or boxes, stone filled, 6" deep	B-13	200	.280	S.Y.	11.85	6.50	2.75	21.10	26	
	0500	9" deep		163	.344		13.50	8	3.37	24.87	31	
	0600	12" deep		153	.366		15.65	8.50	3.59	27.74	34.50	
	0700	18" deep		102	.549		25.50	12.75	5.40	43.65	54	
	0800	36" deep		60	.933		42	21.50	9.15	72.65	90.50	
716	0010	**STONE WALL** Including excavation, concrete footing and										716
	0020	stone 3' below grade. Price is exposed face area.										
	0200	Decorative random stone, to 6' high, 1'-6" thick, dry set	D-1	35	.457	S.F.	7.60	11.25		18.85	26	
	0300	Mortar set		40	.400		9.25	9.85		19.10	25.50	
	0600	Mortar set		40	.400		13.50	9.85		23.35	30	
	0800	Retaining wall, random stone, 6' to 10' high, 2' thick, dry set		45	.356		9.50	8.75		18.25	24	
	0900	Mortar set		50	.320		11.50	7.85		19.35	25	
	1100	Cut stone, 6' to 10' high, 2' thick, dry set		45	.356		14.75	8.75		23.50	30	
	1200	Mortar set		50	.320		15.75	7.85		23.60	29.50	
	5100	Setting stone, dry		100	.160	C.F.		3.94		3.94	6.10	
	5600	With mortar		120	.133	"		3.28		3.28	5.10	

022 800 | Soil Treatment

804	0010	**TERMITE PRETREATMENT**										804
	0020	Slab and walls, residential	1 Skwk	1,200	.007	SF Flr.	.19	.19		.38	49	
	0100	Commercial, minimum		2,496	.003		.16	.09		.25	31	
	0200	Maximum		1,645	.005		.13	.14		.27	36	
	0400	Insecticides for termite control, minimum		14.20	.563	Gal.	10	15.80		25.80	36	
	0500	Maximum		11	.727	"	17.10	20.50		37.60	51	

023 | Tunneling, Piles & Caissons

023 100 | Tunnel Construction

			CREW	DAILY OUTPUT	LABOR-HOURS	UNIT	1999 BARE COSTS MAT.	LABOR	EQUIP.	TOTAL	TOTAL INCL O&P	
150	0010	**MICROTUNNELING** Not including excavation, backfill, shoring,										150
	0020	or dewatering, average 50'/day, slurry method										
	0100	24" to 48" outside diameter, minimum				L.F.					600	
	0110	Adverse conditions, add				%					50%	
	1000	Rent microtunneling machine, average monthly lease				Month					80,000	
	1010	Operating technician				Day					600	
	1100	Mobilization and demobilization, minimum				Job					40,000	
	1110	Maximum				"					400,000	

023 400 | Tunnel Support Systems

404	0011	**ROCK BOLTS**										404
	2020	Hollow core, prestressable anchor, 1" diameter, 5' long	2 Skwk	32	.500	Ea.	54	14		68	81.50	
	2025	10' long		24	.667		101	18.70		119.70	142	
	2060	2" diameter, 5' long		32	.500		203	14		217	245	

025 250 | Curbs

			CREW	DAILY OUTPUT	LABOR-HOURS	UNIT	1999 BARE COSTS MAT.	LABOR	EQUIP.	TOTAL	TOTAL INCL O&P	
254	0010	**CURBS** Asphaltic, machine formed, 8" wide, 6" high, 40 L.F./ton	B-27	1,000	.032	L.F.	.58	.70	.07	1.35	1.83	254
	0100	8" wide, 8" high, 30 L.F. per ton		900	.036		.67	.78	.08	1.53	2.05	
	0150	Asphaltic berm, 12" W, 3"-6" H, 35 L.F./ton, before pavement		700	.046		.80	1	.10	1.90	2.58	
	0200	12" W, 1-1/2" to 4" H, 60 L.F. per ton, laid with pavement	B-2	1,050	.038		.49	.83		1.32	1.85	
	0300	Concrete, wood forms, 6" x 18", straight	C-2A	500	.096		2.11	2.54		4.65	6.30	
	0400	6" x 18", radius		200	.240		2.22	6.35		8.57	12.35	
	0410	Steel forms, 6" x 18", straight		700	.069		2.57	1.82		4.39	5.65	
	0411	6" x 18", radius		400	.120		3.46	3.18		6.64	8.75	
	0415	Machine formed, 6" x 18", straight	B-69A	2,000	.024		3.04	.57	.23	3.84	4.47	
	0416	6" x 18", radius	"	900	.053		3.17	1.27	.50	4.94	6	
	0421	Curb and gutter, straight										
	0422	with 6" high curb and 6" thick gutter, wood forms										
	0430	24" wide, .055 C.Y. per L.F.	C-2A	375	.128	L.F.	10.25	3.39		13.64	16.60	
	0435	30" wide, .066 C.Y. per L.F.		340	.141		11.15	3.74		14.89	18.10	
	0440	Steel forms, 24" wide, straight		700	.069		4.95	1.82		6.77	8.30	
	0441	Radius		300	.160		4.95	4.24		9.19	12.05	
	0442	30" wide, straight		700	.069		5.95	1.82		7.77	9.40	
	0443	Radius		300	.160		5.95	4.24		10.19	13.15	
	0445	Machine formed, 24" wide, straight	B-69A	2,000	.024		4.95	.57	.23	5.75	6.60	
	0446	Radius		900	.053		4.95	1.27	.50	6.72	7.95	
	0447	30" wide, straight		2,000	.024		5.95	.57	.23	6.75	7.70	
	0448	Radius		900	.053		5.95	1.27	.50	7.72	9.05	
	0451	Median mall, 2' x 9" high, straight		2,200	.022		5.20	.52	.21	5.93	6.75	
	0452	Radius	B-69B	900	.053		5.20	1.27	1.01	7.48	8.75	
	0453	4' x 9" high, straight		2,000	.024		10.40	.57	.45	11.42	12.85	
	0454	Radius		800	.060		10.40	1.42	1.13	12.95	14.90	
	0550	Precast, 6" x 18", straight	B-29	700	.080		6.25	1.86	.91	9.02	10.80	
	0600	6" x 18", radius	"	325	.172		7.75	4	1.96	13.71	16.90	
	1000	Granite, split face, straight, 5" x 16"	D-13	500	.096		10	2.51	.78	13.29	15.75	
	1100	6" x 18"	"	450	.107		13.15	2.79	.87	16.81	19.75	
	1300	Radius curbing, 6" x 18", over 10' radius	B-29	260	.215		16.10	5	2.45	23.55	28	
	1400	Corners, 2' radius		80	.700	Ea.	54	16.25	7.95	78.20	94	
	1600	Edging, 4-1/2" x 12", straight		300	.187	L.F.	5	4.34	2.12	11.46	14.60	
	1800	Curb inlets, (guttermouth) straight		41	1.366	Ea.	120	31.50	15.55	167.05	199	
	2000	Indian granite (belgian block)										
	2100	Jumbo, 10-1/2"x7-1/2"x4", grey	D-1	150	.107	L.F.	1.75	2.62		4.37	6	
	2150	Pink		150	.107		2.15	2.62		4.77	6.45	
	2200	Regular, 9"x4-1/2"x4-1/2", grey		160	.100		1.70	2.46		4.16	5.70	
	2250	Pink		160	.100		2	2.46		4.46	6.05	
	2300	Cubes, 4"x4"x4", grey		175	.091		1.65	2.25		3.90	5.30	
	2350	Pink		175	.091		1.75	2.25		4	5.45	
	2400	6"x6"x6", pink		155	.103		3.60	2.54		6.14	7.90	
	2500	Alternate pricing method for indian granite										
	2550	Jumbo, 10-1/2"x7-1/2"x4" (30lb), grey				Ton	100			100	110	
	2600	Pink					125			125	138	
	2650	Regular, 9"x4-1/2"x4-1/2" (20lb), grey					120			120	132	
	2700	Pink					140			140	154	
	2750	Cubes, 4"x4"x4" (5lb), grey					200			200	220	
	2800	Pink					225			225	248	
	2850	6"x6"x6" (25lb), pink					140			140	154	
	2900	For pallets, add					15			15	16.50	
258	0010	**EDGING**										258
	0050	Aluminum alloy, including stakes, 1/8" x 4", mill finish	B-1	390	.062	L.F.	1.75	1.36		3.11	4.07	
	0051	Black paint		390	.062		2.03	1.36		3.39	4.37	
	0052	Black anodized		390	.062		2.34	1.36		3.70	4.72	

027 100 | Subdrainage Systems

		CREW	DAILY OUTPUT	LABOR-HOURS	UNIT	1999 BARE COSTS MAT.	LABOR	EQUIP.	TOTAL	TOTAL INCL O&P
8080	12" diameter	B-20	20	1.200	Ea.	55	29		84	107

027 150 | Sewage Systems

0010	**CATCH BASINS OR MANHOLES** not including footing, excavation,									
0020	backfill, frame and cover									
0050	Brick, 4' inside diameter, 4' deep	D-1	1	16	Ea.	263	395		658	900
0100	6' deep		.70	22.857		370	560		930	1,275
0150	8' deep		.50	32		475	785		1,260	1,750
0200	For depths over 8', add		4	4	V.L.F.	100	98.50		198.50	263
0400	Concrete blocks (radial), 4' I.D., 4' deep		1.50	10.667	Ea.	300	262		562	740
0500	6' deep		1	16		390	395		785	1,050
0600	8' deep		.70	22.857		510	560		1,070	1,425
	For depths over 8', add		5.50	2.909	V.L.F.	76.50	71.50		148	195
	Concrete, cast in place, 4' x 4', 8" thick, 4' deep	C-14H	2	24	Ea.	335	650	18.70	1,003.70	1,400
	6' deep		1.50	32		485	865	25	1,375	1,925
1000	8' deep		1	48		650	1,300	37.50	1,987.50	2,800
1100	For depths over 8', add		8	6	V.L.F.	82	162	4.68	248.68	355
1110	Precast, 4' I.D., 4' deep	B-22	4.10	7.317	Ea.	315	185	49.50	549.50	690
1120	6' deep		3	10		425	253	68	746	935
1130	8' deep		2	15		470	380	102	952	1,225
1140	For depths over 8', add		16	1.875	V.L.F.	78.50	47.50	12.75	138.75	175
1150	5' I.D., 4' deep	B-6	3	8	Ea.	445	187	73	705	860
1160	6' deep		2	12		605	280	109	994	1,225
1170	8' deep		1.50	16		760	375	146	1,281	1,575
1180	For depths over 8', add		12	2	V.L.F.	99	46.50	18.25	163.75	200
1190	6' I.D., 4' deep		2	12	Ea.	730	280	109	1,119	1,350
1200	6' deep		1.50	16		950	375	146	1,471	1,800
1210	8' deep		1	24		1,175	560	219	1,954	2,375
1220	For depths over 8', add		8	3	V.L.F.	153	70	27.50	250.50	305
1250	Slab tops, precast, 8" thick									
1300	4' diameter manhole	B-6	8	3	Ea.	148	70	27.50	245.50	300
1400	5' diameter manhole		7.50	3.200		247	75	29	351	420
1500	6' diameter manhole		7	3.429		287	80	31.50	398.50	475
1510	Grates only, for pipe bells, plastic, 4" diameter pipe	1 Clab	50	.160		4.23	3.43		7.66	10.05
1514	6" diameter pipe		50	.160		5.10	3.43		8.53	11
1516	8" diameter pipe		50	.160		5.85	3.43		9.28	11.85
1520	For beehive type grate, add					50%				
1550	Gray iron, 4" dia. pipe, light duty	1 Clab	50	.160		14.30	3.43		17.73	21
1551	Heavy duty		50	.160		24.50	3.43		27.93	32.50
1552	6" diameter, pipe, light duty		50	.160		22.50	3.43		25.93	30
1553	Heavy duty		50	.160		28.50	3.43		31.93	37
1554	8" diamter pipe, light duty		50	.160		30.50	3.43		33.93	39
1555	Heavy duty		50	.160		32.50	3.43		35.93	41.50
1556	10" diameter pipe, light duty		40	.200		41	4.29		45.29	52
1557	Heavy duty		40	.200		45	4.29		49.29	56.50
1558	12" diamter pipe, light duty		40	.200		51	4.29		55.29	63
1559	Heavy duty		40	.200		56	4.29		60.29	68.50
1560	15" diamter pipe, light duty		32	.250		63	5.35		68.35	78
1561	Heavy duty		32	.250		67.50	5.35		72.85	82.50
1562	18" diameter pipe, light duty		32	.250		71.50	5.35		76.85	87
1563	Heavy duty		32	.250		79.50	5.35		84.85	96
1568	For beehive type grate, add					50%				
1570	Covers only for pipe bells, gray iron, med. duty									
1571	4" diameter pipe	1 Clab	50	.160	Ea.	28.50	3.43		31.93	37
1572	6" diameter pipe		50	.160		46	3.43		49.43	56

027 150 | Sewage Systems

			CREW	DAILY OUTPUT	LABOR-HOURS	UNIT	1999 BARE COSTS MAT.	LABOR	EQUIP.	TOTAL	TOTAL INCL O&P
152	1573	8" diameter pipe	1 Clab	50	.160	Ea.	61	3.43		64.43	73
	1574	10" diameter pipe		40	.200		66.50	4.29		70.79	80
	1575	12" diameter pipe		40	.200		71.50	4.29		75.79	85.50
	1576	15" diameter pipe		32	.250		81.50	5.35		86.85	98.50
	1577	18" diameter pipe		32	.250		112	5.35		117.35	131
	1578	24" diameter pipe	2 Clab	24	.667		138	14.30		152.30	174
	1579	36" diameter pipe	"	24	.667		165	14.30		179.30	205
	1580	Curb inlet frame, grate, and curb box									
	1582	Large 24" x 36" heavy duty	B-24	2	12	Ea.	335	300		655	860
	1590	Small 10" x 21" medium duty	"	2	12		281	300		581	775
	1600	Frames & covers, C.I., 24" square, 500 lb.	B-6	7.80	3.077		213	72	28	313	380
	1700	26" D shape, 600 lb.		7	3.429		214	80	31.50	325.50	395
	1800	Light traffic, 18" diameter, 100 lb.		10	2.400		76.50	56	22	154.50	195
	1900	24" diameter, 300 lb.		8.70	2.759		138	64.50	25	227.50	279
	2000	36" diameter, 900 lb.		5.80	4.138		385	96.50	37.50	519	610
	2100	Heavy traffic, 24" diameter, 400 lb.		7.80	3.077		172	72	28	272	330
	2200	36" diameter, 1150 lb.		3	8		510	187	73	770	930
	2300	Mass. State standard, 26" diameter, 475 lb.		7	3.429		214	80	31.50	325.50	395
	2400	30" diameter, 620 lb.		7	3.429		243	80	31.50	354.50	425
	2500	Watertight, 24" diameter, 350 lb.		7.80	3.077		293	72	28	393	465
	2600	26" diameter, 500 lb.		7	3.429		330	80	31.50	441.50	525
	2700	32" diameter, 575 lb.		6	4		390	93.50	36.50	520	610
	2800	3 piece cover & frame, 10" deep,									
	2900	1200 lbs., for heavy equipment	B-6	3	8	Ea.	770	187	73	1,030	1,225
	3000	Raised for paving 1-1/4" to 2" high,									
	3100	4 piece expansion ring									
	3200	20" to 26" diameter	1 Clab	3	2.667	Ea.	102	57		159	202
	3300	30" to 36" diameter	"	3	2.667	"	143	57		200	247
	3320	Frames and covers, existing, raised for paving 2", including									
	3340	row of brick, concrete collar, up to 12" wide frame	B-6	18	1.333	Ea.	31	31	12.15	74.15	96
	3360	20" to 26" wide frame		11	2.182		41	51	19.90	111.90	146
	3380	30" to 36" wide frame		9	2.667		51	62.50	24.50	138	180
	3400	Inverts, single channel brick	D-1	3	5.333		57	131		188	267
	3500	Concrete		5	3.200		45	78.50		123.50	172
	3600	Triple channel, brick		2	8		86.50	197		283.50	400
	3700	Concrete		3	5.333		61	131		192	271
	3800	Steps, heavyweight cast iron, 7" x 9"	1 Bric	40	.200		8.35	5.50		13.85	17.75
	3900	8" x 9"		40	.200		12.50	5.50		18	22.50
	3928	12" x 10-1/2"		40	.200		13	5.50		18.50	23
	4000	Standard sizes, galvanized steel		40	.200		11.75	5.50		17.25	21.50
	4100	Aluminum		40	.200		13	5.50		18.50	23
156	0010	**PIPE REPAIR**									
	0020	Not including excavation or backfill									
	0100	Clamp, stainless steel, lightweight, for steel pipe									
	0110	3" long, 1/2" diameter pipe	1 Plum	34	.235	Ea.	6.60	7.65		14.25	18.85
	0120	3/4" diameter pipe		32	.250		6.80	8.15		14.95	19.85
	0130	1" diameter pipe		30	.267		7.30	8.70		16	21
	0140	1-1/4" diameter pipe		28	.286		7.75	9.30		17.05	22.50
	0150	1-1/2" diameter pipe		26	.308		8	10.05		18.05	24
	0160	2" diameter pipe		24	.333		8.75	10.85		19.60	26
	0170	2-1/2" diameter pipe		23	.348		9.50	11.35		20.85	27.50
	0180	3" diameter pipe		22	.364		10.50	11.85		22.35	29.50
	0190	3-1/2" diameter pipe		21	.381		11.25	12.40		23.65	31
	0200	4" diameter pipe	B-20	56	.429		11.75	10.40		22.15	29.50
	0210	5" diameter pipe		53	.453		13.50	11		24.50	32

027 400 | Septic Systems

		CREW	DAILY OUTPUT	LABOR-HOURS	UNIT	1999 BARE COSTS MAT.	LABOR	EQUIP.	TOTAL	TOTAL INCL O&P	
0140	2,500 gallon	B-21	5	5.600	Ea.	1,000	140	27	1,167	1,350	404
0180	4,000 gallon	↓	4	7		3,000	175	34	3,209	3,600	
0200	5,000 gallon	B-13	3.50	16		4,300	370	157	4,827	5,475	
0220	5,000 gal., 4 piece	"	3	18.667		5,575	435	183	6,193	7,025	
0300	15,000 gallon, 4 piece	B-13B	1.70	32.941		11,000	765	465	12,230	13,800	
0400	25,000 gallon, 4 piece		1.10	50.909		16,500	1,175	720	18,395	20,800	
0500	40,000 gallon, 4 piece	↓	.80	70		27,000	1,625	990	29,615	33,300	
0520	50,000 gallon, 5 piece	B-13C	.60	93.333		31,100	2,175	1,875	35,150	39,700	
0540	75,000 gallon, cast in place	C-14C	.25	448		37,800	11,700	148	49,648	60,500	
0560	100,000 gallon	"	.15	746		46,800	19,500	246	66,546	83,000	
0600	High density polyethylene, 1,000 gallon	B-21	6	4.667		800	117	22.50	939.50	1,100	
0700	1,500 gallon		4	7		1,000	175	34	1,209	1,400	
0900	Galley, 4' x 4' x 4'	↓	16	1.750		175	44	8.50	227.50	271	
1000	Distribution boxes, concrete, 7 outlets	2 Clab	16	1		75	21.50		96.50	117	
1100	9 outlets	"	8	2		225	43		268	315	
1150	Leaching field chambers, 13' x 3'-7" x 1'-4", standard	B-13	16	3.500		665	81.50	34.50	781	895	
1200	Heavy duty, 8' x 4' x 1'-6"		14	4		320	93	39	452	540	
1300	13' x 3'-9" x 1'-6"		12	4.667		910	108	46	1,064	1,225	
1350	20' x 4' x 1'-6"	↓	5	11.200		750	260	110	1,120	1,350	
1400	Leaching pit, precast concrete, 3' diameter, 3' deep	B-21	8	3.500		145	87.50	17	249.50	315	
1500	6' diameter, 3' section		4.70	5.957		375	149	29	553	680	
1600	Leaching pit, 6'-6" diameter, 6' deep		5	5.600		450	140	27	617	745	
1620	8' deep		4	7		530	175	34	739	895	
1700	8' diameter, H-20 load, 6' deep		4	7		730	175	34	939	1,125	
1720	8' deep		3	9.333		900	234	45.50	1,179.50	1,400	
2000	Velocity reducing pit, precast conc., 6' diameter, 3' deep	↓	4.70	5.957	↓	225	149	29	403	515	
2200	Excavation for septic tank, 3/4 C.Y. backhoe	B-12F	145	.110	C.Y.		2.95	3.10	6.05	7.90	
2400	4' trench for disposal field, 3/4 C.Y. backhoe	"	335	.048	L.F.		1.28	1.34	2.62	3.41	
2600	Gravel fill, run of bank	B-6	150	.160	C.Y.	5.50	3.74	1.46	10.70	13.45	
2800	Crushed stone, 3/4"	"	150	.160	"	18.30	3.74	1.46	23.50	27.50	

027 660 | Relining Exist. Pipelines

664	0010	**LINING PIPE** with cement, incl. bypass and cleaning									664
	0020	Less than 10,000 L.F., urban, 6" to 10"	C-17E	130	.615	L.F.	5.80	17.50	.47	23.77	34.50
	0050	10" to 12"		125	.640		7.15	18.20	.49	25.84	37
	0070	12" to 16"		115	.696		7.35	19.80	.53	27.68	39.50
	0100	16" to 20"		95	.842		8.60	24	.64	33.24	48
	0200	24" to 36"		90	.889		9.25	25.50	.68	35.43	51
	0300	48" to 72"		80	1		14.80	28.50	.76	44.06	62
	0500	Rural, 6" to 10"		180	.444		5.80	12.65	.34	18.79	26.50
	0550	10" to 12"		175	.457		7.15	13	.35	20.50	29
	0570	12" to 16"		160	.500		7.45	14.25	.38	22.08	31
	0600	16" to 20"		135	.593		7.90	16.85	.45	25.20	35.50
	0700	24" to 36"		125	.640		9.40	18.20	.49	28.09	39.50
	0800	48" to 72"		100	.800		14.80	23	.61	38.41	53
	1000	Greater than 10,000 L.F., urban, 6" to 10"		160	.500		5.80	14.25	.38	20.43	29.50
	1050	10" to 12"		155	.516		7.05	14.70	.39	22.14	31
	1070	12" to 16"		140	.571		7.35	16.25	.43	24.03	34
	1100	16" to 20"		120	.667		7.90	18.95	.51	27.36	39
	1200	24" to 36"		115	.696		9.40	19.80	.53	29.73	42
	1300	48" to 72"		95	.842		14.80	24	.64	39.44	55
	1500	Rural, 6" to 10"		215	.372		5.80	10.60	.28	16.68	23.50
	1550	10" to 12"		210	.381		7.15	10.85	.29	18.29	25.50
	1570	12" to 16"		185	.432		7.35	12.30	.33	19.98	28
	1600	16" to 20"		150	.533		7.90	15.15	.41	23.46	33
	700	24" to 36"	↓	140	.571	↓	9.40	16.25	.43	26.08	36.50

028 300 | Fences & Gates

			CREW	DAILY OUTPUT	LABOR-HOURS	UNIT	1999 BARE COSTS MAT.	LABOR	EQUIP.	TOTAL	TOTAL INCL O&P	
320	4760	12' x 7' x 3'	B-80B	6	5.333	Ea.	390	122	47	559	670	320
	4762	14' x 7' x 3'		5	6.400		435	147	56.50	638.50	765	
	4764	10' x 10'		4	8		455	183	70.50	708.50	870	
	4766	12' x 10'		7	4.571		490	105	40.50	635.50	750	
	4768	14' x 10'		7	4.571		530	105	40.50	675.50	790	
	4780	Vinyl clad, single transom, 3' x 7' x 3'		6	5.333		299	122	47	468	570	
	4782	4' x 7' x 3'		10	3.200		315	73.50	28.50	417	490	
	4784	3' x 10'		8	4		300	91.50	35.50	427	510	
	4786	4' x 10'		10	3.200		340	73.50	28.50	442	520	
	4788	Double transom, 10' x 7' x 3'		10	3.200		680	73.50	28.50	782	890	
	4790	12' x 7' x 3'		6	5.333		740	122	47	909	1,050	
	4792	14' x 7' x 3'		5	6.400		830	147	56.50	1,033.50	1,200	
	4794	10' x 10'		4	8		725	183	70.50	978.50	1,150	
	4796	12' x 12'		7	4.571		780	105	40.50	925.50	1,075	
	4798	14' x 14'		7	4.571		840	105	40.50	985.50	1,125	
	5000	Snow fence on steel posts 10' O.C., 4' high	B-1	500	.048	L.F.	1.55	1.06		2.61	3.38	
	5300	Tubular picket, steel, 6' sections, 1-9/16" posts, 4' high	B-80	300	.107		15.50	2.50	1.80	19.80	23	
	5400	2" posts, 5' high		240	.133		21.50	3.13	2.25	26.88	31	
	5600	2" posts, 6' high		200	.160		24.50	3.75	2.70	30.95	35.50	
	5700	Staggered picket 1-9/16" posts, 4' high		300	.107		14	2.50	1.80	18.30	21.[illegible]	
	5800	2" posts, 5' high		240	.133		23	3.13	2.25	28.38	33	
	5900	2" posts, 6' high		200	.160		24	3.75	2.70	30.45	35	
	6200	Gates, 4' high, 3' wide	B-1	10	2.400	Ea.	135	53		188	233	
	6300	5' high, 3' wide		10	2.400		175	53		228	277	
	6400	6' high, 3' wide		10	2.400		180	53		233	282	
	6500	4' wide		10	2.400		210	53		263	315	
324	0010	**FENCE, RAIL** Picket, No. 2 cedar, Gothic, 2 rail, 3' high	B-1	160	.150	L.F.	4.40	3.32		7.72	10.05	324
	0050	Gate, 3'-6" wide		9	2.667	Ea.	38	59		97	135	
	0400	3 rail, 4' high		150	.160	L.F.	5.05	3.54		8.59	11.10	
	0500	Gate, 3'-6" wide		9	2.667	Ea.	45.50	59		104.50	143	
	5000	Fence rail, redwood, 2" x 4", merch grade 8'		2,400	.010	L.F.	.86	.22		1.08	1.30	
	5050	Select grade, 8'		2,400	.010	"	2.66	.22		2.88	3.28	
	6000	Fence post, select redwood, earthpacked & treated, 4" x 4" x 6'		96	.250	Ea.	8.55	5.55		14.10	18.1[illegible]	
	6010	4" x 4" x 8'		96	.250		10.15	5.55		15.70	19.85	
	6020	Set in concrete, 4" x 4" x 6'		50	.480		11	10.60		21.60	29	
	6030	4" x 4" x 8'		50	.480		13.10	10.60		23.70	[illegible]	
	6040	Wood post, 4' high, set in concrete, incl. concrete		50	.480		6.40	10.60		17	24	
	6050	Earth packed		96	.250		4.37	5.55		9.92	13.50	
	6060	6' high, set in concrete, incl. concrete		50	.480		8.20	10.60		18.80	26	
	6070	Earth packed		96	.250		5.95	5.55		11.50	15.35	
328	0010	**FENCE, WOOD** Basket weave, 3/8" x 4" boards, 2" x 4"										328
	0020	stringers on spreaders, 4" x 4" posts										
	0050	No. 1 cedar, 6' high	B-1	160	.150	L.F.	7	3.32		10.32	12.90	
	0070	Treated pine, 6' high	"	150	.160	"	8.40	3.54		11.94	14.80	
	0200	Board fence, 1" x 4" boards, 2" x 4" rails, 4" x 4" post										
	0220	Preservative treated, 2 rail, 3' high	B-1	145	.166	L.F.	5	3.66		8.66	11.25	
	0240	4' high		135	.178		5.50	3.93		9.43	12.25	
	0260	3 rail, 5' high		130	.185		6.20	4.08		10.28	13.20	
	0300	6' high		125	.192		7.20	4.25		11.45	14.60	
	0320	No. 2 grade western cedar, 2 rail, 3' high		145	.166		5.45	3.66		9.11	11.75	
	0340	4' high		135	.178		6.50	3.93		10.43	13.35	
	0360	3 rail, 5' high		130	.185		7.50	4.08		11.58	14.65	
	0400	6' high		125	.192		8.25	4.25		12.50	15.75	
	0420	No. 1 grade cedar, 2 rail, 3' high		145	.166		7.50	3.66		11.16	14	
	0440	4' high		135	.178		8.55	3.93		12.48	15.60	
	0460	3 rail, 5' high		130	.185		10.20	4.08		14.28	17.60	

029 300 | Lawns & Grasses

			CREW	DAILY OUTPUT	LABOR-HOURS	UNIT	1999 BARE COSTS MAT.	LABOR	EQUIP.	TOTAL	TOTAL INCL O&P	
308	1000	Hydro or air seeding, with mulch & fertil. R029-310	B-81	80	.300	M.S.F.	23	7.20	7.55	37.75	45	308
	1100	Baron, push spreader	1 Clab	8	1		18.50	21.50		40	54.50	
	1200	Tractor spreader	B-66	52	.154		18.50	4.18	3.86	26.54	31	
	1300	Hydro or air seeding, with mulch & fertil.	B-81	80	.300		25.50	7.20	7.55	40.25	47.50	
	1500	Clover, 0.67#/M.S.F., white, push spreader	1 Clab	8	1		3	21.50		24.50	37.50	
	1600	Tractor spreader	B-66	52	.154		3	4.18	3.86	11.04	13.90	
	1700	Hydro or air seeding, with mulch and fertil.	B-81	80	.300		16.50	7.20	7.55	31.25	37.50	
	1800	Ladino, push spreader	1 Clab	8	1		4.80	21.50		26.30	39.50	
	1900	Tractor spreader	B-66	52	.154		4.80	4.18	3.86	12.84	15.90	
	2000	Hydro or air seeding, with mulch and fertil.	B-81	80	.300		21	7.20	7.55	35.75	42.50	
	2200	Fescue 5.5#/M.S.F., tall, push spreader	1 Clab	8	1		8	21.50		29.50	43	
	2300	Tractor spreader	B-66	52	.154		8	4.18	3.86	16.04	19.40	
	2400	Hydro or air seeding, with mulch and fertilizer	B-81	80	.300		26.50	7.20	7.55	41.25	48.50	
	2500	Chewing, push spreader	1 Clab	8	1		9	21.50		30.50	44	
	2600	Tractor spreader	B-66	52	.154		9	4.18	3.86	17.04	20.50	
	2700	Hydro or air seeding, with mulch and fertil.	B-81	80	.300		29.50	7.20	7.55	44.25	52	
	2800	Creeping, push spreader	1 Clab	8	1		8.50	21.50		30	43.50	
	2810	Tractor spreader	B-66	26	.308		8.50	8.35	7.70	24.55	30.50	
	2820	Hydro or air seeding, with mulch and fertilizer	B-81	80	.300		28	7.20	7.55	42.75	50.50	
	2900	Crown vetch, 4#/M.S.F., push spreader	1 Clab	8	1		35	21.50		56.50	72.50	
	3000	Tractor spreader	B-66	52	.154		35	4.18	3.86	43.04	49	
	3100	Hydro or air seeding, with mulch and fertilizer	B-81	80	.300		48	7.20	7.55	62.75	72.50	
	3300	Rye, 10#/M.S.F., annual, push spreader	1 Clab	8	1		12	21.50		33.50	47	
	3400	Tractor spreader	B-66	52	.154		12	4.18	3.86	20.04	24	
	3500	Hydro or air seeding, with mulch and fertilizer	B-81	80	.300		26.50	7.20	7.55	41.25	48.50	
	3600	Fine textured, push spreader	1 Clab	8	1		14	21.50		35.50	49.50	
	3700	Tractor spreader	B-66	52	.154		14	4.18	3.86	22.04	26	
	3800	Hydro or air seeding, with mulch and fertilizer	B-81	80	.300		31	7.20	7.55	45.75	53.50	
	4000	Shade mix, 6#/M.S.F., push spreader	1 Clab	8	1		10	21.50		31.50	45	
	4100	Tractor spreader	B-66	52	.154		10	4.18	3.86	18.04	21.50	
	4200	Hydro or air seeding, with mulch and fertilizer	B-81	80	.300		22	7.20	7.55	36.75	43.50	
	4400	Slope mix, 6#/M.S.F., push spreader	1 Clab	8	1		10	21.50		31.50	45	
	4500	Tractor spreader	B-66	52	.154		10	4.18	3.86	18.04	21.50	
	4600	Hydro or air seeding, with mulch and fertilizer	B-81	80	.300		25	7.20	7.55	39.75	47	
	4800	Turf mix, 4#/M.S.F., push spreader	1 Clab	8	1		10	21.50		31.50	45	
	4900	Tractor spreader	B-66	52	.154		10	4.18	3.86	18.04	21.50	
	5000	Hydro or air seeding, with mulch and fertilizer	B-81	80	.300		25	7.20	7.55	39.75	47	
	5200	Utility mix, 7#/M.S.F., push spreader	1 Clab	8	1		7.75	21.50		29.25	42.50	
	5300	Tractor spreader	B-66	52	.154		7.75	4.18	3.86	15.79	19.15	
	5400	Hydro or air seeidng, with mulch and fertilizer	B-81	80	.300		29	7.20	7.55	43.75	51.50	
	5600	Wildflower, .10#/M.S.F., push spreader	1 Clab	8	1		3	21.50		24.50	37.50	
	5700	Tractor spreader	B-66	52	.154		3	4.18	3.86	11.04	13.90	
	5800	Hydro or air seeding, with mulch and fertilizer	B-81	80	.300		16.50	7.20	7.55	31.25	37.50	
	7000	Apply fertilizer, 800 lb./acre	B-66	4	2	Ton	330	54.50	50	434.50	505	
	7025	Limestone, mechanical spread	A-1	1.75	4.571	Acre	3.25	98	39	140.25	201	
	7050	Apply limestone, 800 lb./acre	B-66	4.25	1.882	Ton	140	51	47	238	284	
	7060	Limestone, mechanical spread	A-1	1.74	4.598	Acre	3.25	98.50	39.50	141.25	202	
	7100	Apply mulch, see div. 029-516										
316	0010	**SODDING** 1" deep, bluegrass sod, on level ground, over 8 M.S.F.	B-63	22	1.818	M.S.F.	200	41	5.05	246.05	290	316
	0200	4 M.S.F.		17	2.353	"	220	53	6.55	279.55	330	
	0300	1000 S.F.		3.50	11.429	Ea.	250	258	32	540	715	
	0500	Sloped ground, over 8 M.S.F.		6	6.667	M.S.F.	200	151	18.55	369.55	475	
	0600	4 M.S.F.		5	8		220	181	22	423	550	
	0700	1000 S.F.		4	10		250	226	28	504	660	
	1000	Bent grass sod, on level ground, over 6 M.S.F.		20	2		460	45	5.55	510.55	580	
	1100	3 M.S.F.		18	2.222		500	50	6.20	556.20	635	

029 500 | Trees/Plants/Grnd Cover

			CREW	DAILY OUTPUT	LABOR-HOURS	UNIT	1999 BARE COSTS MAT.	LABOR	EQUIP.	TOTAL	TOTAL INCL O&P	
521	0720	Potted, 2-1/4" diameter	1 Clab	101	.079	Ea.		1.70		1.70	[illegible]	521
	0722	3" diameter		343	.023			.50		.50	[illegible]	
	0724	4" diameter		305	.026			.56		.56	[illegible]	
	0730	Container, 1 gallon	2 Clab	41.30	.387			8.30		8.30	[illegible]	
	0732	2 gallon		25.20	.635			13.60		13.60	[illegible]	
	0734	3 gallon		19.60	.816			17.50		17.50	[illegible]	
	0735	5 gallon		14	1.143			24.50		24.50	[illegible]	
	0750	Bagged and burlapped, 12" diameter ball, by hand		9.10	1.758			37.50		37.50	[illegible]	
	0751	Backhoe/loader	B-6	19.60	1.224			28.50	11.15	39.65	57	
	0752	15" diameter, by hand	2 Clab	7.80	2.051			44		44	69	
	0753	Backhoe/loader, 48 H.P.	B-6	14.70	1.633			38	14.90	52.90	75.50	
	0754	18" diameter, by hand	2 Clab	5.60	2.857			61.50		61.50	96.50	
	0755	Backhoe/loader, 48 H.P.	B-6	13.30	1.805			42	16.45	58.45	83.50	
	0756	24" diameter, by hand	2 Clab	4.40	3.636			78		78	123	
	0757	Backhoe/loader, 48 H.P.	B-6	10.30	2.330			54.50	21.50	76	108	
	0758	36" diameter backhoe/loader, 48 H.P.	"	8.40	2.857			67	26	93	133	
	0790	For other size root balls, see Reference Section										
	2000	Stake out tree and shrub locations	2 Clab	220	.073	Ea.		1.56		1.56	2.45	
604	0010	**TREES, DECIDUOUS** zones 2 - 6										604
	0100	Acer campestre, (Hedge Maple), Z4, B&B										
	0110	4' to 5'				Ea.	43			43	[illegible]	
	0120	5' to 6'					49			49	54	
	0130	1-1/2" to 2" Cal.					97			97	[illegible]	
	0140	2" to 2-1/2" Cal.					111			111	[illegible]	
	0150	2-1/2" to 3" Cal.					155			155	[illegible]	
	0200	Acer ginnala, (Amur Maple), Z2, cont/BB										
	0210	8' to 10'				Ea.	94			94	[illegible]	
	0220	10' to 12'					124			124	[illegible]	
	0230	12' to 14'					150			150	[illegible]	
	0300	Acer griseum, (Paperbark Maple), Z5, B&B										
	0310	1-1/2" to 1-3/4" Cal.				Ea.	110			110	121	
	0320	1-3/4" to 2" cal.				"	120			120	132	
	0400	Acer palmatum, (Japanese Maple), Z6, cont/BB										
	0410	2' to 2-1/2'				Ea.	34			34	[illegible]	
	0420	4' to 5'					72			72	[illegible]	
	0430	5' to 6'					92			92	[illegible]	
	0440	6' to 7'					164			164	180	
	0450	7' to 8'					230			230	253	
	0460	8' to 10'					280			280	310	
	0470	10' to 12'					400			400	440	
	0500	Acer palmatum atropurpureum, (Bloodgood Japan Maple), Z5, B&B										
	0510	3' to 3-1/2'				Ea.	87			87	95.50	
	0520	3-1/2' to 4'					108			108	119	
	0530	4' to 4-1/2'					135			135	149	
	0540	4-1/2' to 5'					169			169	186	
	0550	5' to 6'					237			237	261	
	0600	Acer platanoides, (Norway Maple), Z4, B&B										
	0610	8' to 10'				Ea.	70			70	[illegible]	
	0620	1-1/2" to 2" Cal.					95			95	105	
	0630	2" to 2-1/2" Cal.					105			105	116	
	0640	2-1/2" to 3" Cal.					140			140	154	
	0650	3" to 3-1/2" Cal.					200			200	220	
	0660	Bare root, 8' to 10'					30			30	33	
	0670	10' to 12'					50			50	55	
	0680	12' to 14'					60			60	66	
	0700	Acer platanoides columnare, (Column maple), Z4, B&B										

029 500 | Trees/Plants/Grnd Cover

		CREW	DAILY OUTPUT	LABOR-HOURS	UNIT	1999 BARE COSTS MAT.	LABOR	EQUIP.	TOTAL	TOTAL INCL O&P	
6640	1-1/2" to 2" Cal.				Ea.	98			98	108	604
6650	2" to 2-1/2" Cal.					118			118	130	
6660	2-1/2" to 3" Cal.					160			160	176	
6670	3" to 3-1/2" Cal.					204			204	224	
6700	Populus alba pyramidalis, (Bolleana Poplar), Z3, cont/BB										
6710	5 Gal.				Ea.	22			22	24	
6720	15 Gal.					75			75	82.50	
6730	20 Gal.					90			90	99	
6800	Populus canadensis, (Hybrid Black Poplar), Z5, B&B										
6810	6' to 8'				Ea.	32			32	35	
6820	1-1/2" to 2" Cal.					108			108	119	
6830	2" to 2-1/2" Cal.					140			140	154	
6900	Populus nigra italica, (Lombardy Poplar), Z4, cont										
6910	5 Gal.				Ea.	32			32	35	
6920	20 Gal.					88			88	97	
6930	6' to 8' Potted					35			35	38.50	
7000	Prunus cerasifera pissardi, (Flowering Plum), Z5, cont/BB										
7010	5 Gal.				Ea.	30			30	33	
7020	15 Gal.					74			74	81.50	
7030	20 Gal.					90			90	99	
7040	5' to 6'					35			35	38.50	
7050	6' to 8'					54			54	59.50	
7060	1-1/2" to 2" Cal.					101			101	111	
7070	2" to 2-1/2" Cal.					126			126	139	
7100	Prunus sargenti columnaris, (Columnar Cherry), Z4, cont/BB										
7110	6' to 8'				Ea.	59			59	65	
7120	1-1/2" to 2" Cal.					84			84	92.50	
7130	2" to 2-1/2" Cal.					113			113	124	
7140	2-1/2" to 3" Cal.					147			147	162	
7200	Prunus serrulata kwanzan, (Flowering Cherry), Z6, cont/BB										
7210	20 Gal.				Ea.	98			98	108	
7220	1-1/2" to 2" Cal.					100			100	110	
7230	2" to 2-1/2" Cal.					122			122	134	
7240	3" to 3-1/2" Cal.					182			182	200	
7250	3-1/2" to 4" Cal.					243			243	267	
7260	4" to 5" Cal.					375			375	430	
7300	Prunus subhirtella pendula, (Weeping Cherry), Z5, B&B										
7310	1-1/4" to 1-1/2" Cal.				Ea.	65			65	71.50	
7320	1-1/2" to 1-3/4" Cal.					79			79	87	
7330	1-3/4" to 2" Cal.					95			95	105	
7340	2" to 2-1/2" Cal.					112			112	123	
7350	2-1/2" to 3" Cal.					148			148	163	
7400	Prunus yedoensis, (Yoshino Cherry), Z5, B&B										
7410	6' to 8'				Ea.	59			59	65	
7420	1-1/2" to 2" Cal.					92			92	101	
7430	2" to 2-1/2" Cal.					106			106	117	
7440	2-1/2" to 3" Cal.					135			135	149	
7500	Pyrus calleryana aristocrat, (Aristocrat Flwrng Pear), Z5, cont/BB										
7510	15 gal.				Ea.	77			77	84.50	
7520	20 Gal.					99			99	109	
7530	6' to 8'					67			67	73.50	
7540	1-1/2" to 2" Cal.					103			103	113	
7550	2" to 2-1/2" Cal.					122			122	134	
7560	2-1/2" to 3" Cal.					160			160	176	
7570	3" to 3-1/2" Cal.					214			214	235	
7580	3-1/2" to 4" Cal.					278			278	305	

029 500 | Trees/Plants/Grnd Cover

		CREW	DAILY OUTPUT	LABOR-HOURS	UNIT	1999 BARE COSTS MAT.	LABOR	EQUIP.	TOTAL	TOTAL INCL O&P
615 1752	5 Gal.				Ea.	14.15			14.15	16.55
1753	12" to 15"					15.05			15.05	16.55
1754	15" to 18"					19.35			19.35	[illegible]
1755	18" to 24"					26			26	[illegible]
1756	24" to 30"					38.50			38.50	42.50
1757	30" to 36"					54			54	[illegible]
1800	Buxus sempervirens, (Common Boxwood), Z5, cont/BB									
1801	12" to 15"				Ea.	15.05			15.05	16.55
1802	15" to 18"					19.35			19.35	21.50
1803	18" to 24"					26			26	28.50
1804	24" to 30"					38.50			38.50	42.50
1850	Callicarpa japonica, (Japanese Beautyberry), Z6, B&B									
1851	2' to 3'				Ea.	12.35			12.35	13.60
1852	3' to 4'					14			14	15.40
1853	4' to 5'					17.15			17.15	18.85
1900	Caragana arborescens, (Siberian Peashrub), Z2, B&B									
1901	3' to 4'				Ea.	20.50			20.50	22.50
1902	4' to 5'					28			28	30.50
1903	5' to 6'					36.50			36.50	40
1904	6' to 8'					62.50			62.50	68.50
1950	Caragana arborescens, (Walkers Weeping Peashrub), Z3, B&B									
1951	1-1/2" to 1-3/4" Cal.				Ea.	88			88	[illegible]
1952	1-3/4" to 2" Cal.					102			102	[illegible]
1953	1-1/2" to 1-3/4" Cal.					88.50			88.50	[illegible]
1954	1-3/4" to 2" Cal.					102			102	[illegible]
2000	Caryopteris x clandonensis, (Bluebeard), Z5, cont									
2001	1 Qt.				Ea.	5			5	[illegible]
2002	1 Gal.					7			7	[illegible]
2003	2 Gal.					11			11	[illegible]
2050	Chaenomeles speciosa, (Flowering Quince), Z5, cont/BB									
2051	18" to 24"				Ea.	13.60			13.60	14.95
2052	2' to 3'					18.15			18.15	19.95
2053	3' to 4'					28			28	31
2100	Clethra alnifolia rosea, (Pink Summersweet), Z4, B&B									
2101	2' to 3'				Ea.	20			20	[illegible]
2102	3' to 4'					26			26	[illegible]
2103	4' to 5'					35			35	[illegible]
2150	Cornus alba siberica, (Siberian Dogwood), Z3, B&B									
2151	3' to 4'				Ea.	20.50			20.50	22.50
2152	4' to 5'					24.50			24.50	26.50
2153	5' to 6'					34.50			34.50	38
2154	6' to 7'					41			41	45
2200	Cornus alternifolia, (Alternate Leaved Dogwood), Z3, B&B									
2201	4' to 5'				Ea.	27			27	29.50
2202	5' to 6'					36.50			36.50	40.50
2203	6' to 8'					50.50			50.50	55.50
2250	Cornus mas, (Cornelian Cherry), Z5, B&B									
2251	2' to 3'				Ea.	22			22	24
2252	3' to 4'					28			28	31
2253	4' to 5'					36			36	39.50
2254	5' to 6'					49			49	54
2300	Cornus racemosa, (Gray Dogwood), Z4, B&B									
2301	18" to 24"				Ea.	11			11	12.10
2302	2' to 3'					13			13	14.30
2303	3' to 4'					17			17	18.70
2350	Cornus stolonifera flaviramea, (Goldentwig Dogwood), Z3, cont/BB									

029 500 | Trees/Plants/Grnd Cover

		CREW	DAILY OUTPUT	LABOR-HOURS	UNIT	1999 BARE COSTS MAT.	LABOR	EQUIP.	TOTAL	TOTAL INCL O&P	
0010	**GROUND COVERS**, vines and climbing plants										638
1000	Achillea tomentosa, (Woolly Yarrow), Z4, cont										
1010	1 Qt.				Ea.	1.50			1.50	1.65	
1020	2 Gal.				"	4.75			4.75	5.20	
1100	Aegopodium podagaria, (Snow-on-the-Mountain Goutweed), Z3, cont										
1110	1 Qt.				Ea.	1.50			1.50	1.65	
1120	1 Gal.					3.65			3.65	4.02	
1130	Flat/24 plants				▼	15.65			15.65	17.20	
1200	Ajuga reptans, (Carpet Bugle), Z4, cont										
1210	3" Pot				Ea.	.90			.90	.99	
1220	1 Qt.					1.50			1.50	1.65	
1230	1 Gal.					3.65			3.65	4.02	
1240	Flat/24 plants				▼	15.65			15.65	17.20	
1300	Akebia quinata, (Five-Leaf Akebia), Z4, cont										
1310	1 Gal.				Ea.	4.75			4.75	5.20	
1320	3 Gal.				"	10			10	11	
1400	Alchemilla vulgaris, (Common Lady's-Mantle), Z3, cont										
1410	1 Qt.				Ea.	1.50			1.50	1.65	
1420	1 Gal.				"	3.65			3.65	4.02	
1500	Ampelopsis brevipedunculata elegans, (Ampelopsis), Z4, cont										
1510	1 Gal.				Ea.	4.75			4.75	5.20	
1520	3 Gal.				"	9.30			9.30	10.25	
1600	Arctostaphylos uva-ursi, (Bearberry), Z2, cont										
1610	3" Pot				Ea.	1.30			1.30	1.43	
1620	1 Gal.					4.75			4.75	5.20	
1630	5 Gal.				▼	12.65			12.65	13.90	
1700	Aristolochia durior, (Dutchman's Pipe), Z5, cont										
1710	2 Gal.				Ea.	12.65			12.65	13.90	
1720	5 Gal.					23			23	25.50	
1800	Armeria maritima, (Thrift, Sea Pink), Z6, cont										
1810	1 Qt.				Ea.	1.50			1.50	1.65	
1820	1 Gal.				"	3.65			3.65	4.02	
1900	Artemisia schmitdiana, (Silver Mound/Satiny Wormwood), Z3, cont										
1910	1 Qt.				Ea.	1.50			1.50	1.65	
1920	1 Gal.				"	3.65			3.65	4.02	
2000	Artemisia stellerana, (Dusty Miller), Z2, cont										
2010	1 Qt.				Ea.	1.50			1.50	1.65	
2020	1 Gal.				"	3.65			3.65	4.02	
2100	Asarum europaeum, (European Wild Ginger), Z4, cont										
2110	4" Pot				Ea.	3.15			3.15	3.47	
2120	1 Gal.				"	7.90			7.90	8.70	
2200	Baccharis pilularis, (Dwarf Coyote Bush), Z7, cont										
2210	1 Qt.				Ea.	1.50			1.50	1.65	
2220	1 Gal.				"	2.65			2.65	2.92	
2300	Bergenia cordifolia, (Heartleaf Bergenia), Z3, cont										
2310	1 Qt.				Ea.	2.65			2.65	2.92	
2320	1 Gal.				"	4.75			4.75	5.20	
2400	Bougainvillea glabra, , Z10, cont										
2410	1 Gal.				Ea.	5			5	5.50	
2420	5 Gal.				"	11			11	12.10	
2500	Calluna vulgaris cultivars, (Scotch Heather), Z4, cont										
2510	3" Pot				Ea.	1.30			1.30	1.43	
2520	1 Qt.					2.75			2.75	3.03	
2530	1 Gal.					4.95			4.95	5.45	
2540	2 Gal.				▼	10			10	11	
2600	Campsis radicans, (Trumpet Creeper), Z5, cont										

033 100 | Structural Concrete

			CREW	DAILY OUTPUT	LABOR-HOURS	UNIT	1999 BARE COSTS MAT.	LABOR	EQUIP.	TOTAL	TOTAL INCL O&P	
.02	0010	**AGGREGATE** Expanded shale, C.L. lots, 52 lb. per C.F., minimum R033-020				Ton	35			35	38.50	102
	0050	Maximum				"	45			45	49.50	
	0100	Lightweight vermiculite or perlite, 4 C.F. bag, C.L. lots R033-060				Bag	8.70			8.70	9.60	
	0150	L.C.L. lots				"	9.60			9.60	10.55	
	0250	Sand & stone, loaded at pit, crushed bank gravel				Ton	12.40			12.40	13.65	
	0350	Sand, washed, for concrete				"	8.25			8.25	9.05	
	0400	For plaster or brick					16.15			16.15	17.80	
	0450	Stone, 3/4" to 1-1/2"					13			13	14.30	
	0470	Round, river stone					11.75			11.75	12.95	
	0500	3/8" roofing stone & 1/2" pea stone					13			13	14.30	
	0550	For trucking 10 miles, add to the above					3.50			3.50	3.85	
	0600	30 miles, add to the above				▼	7.75			7.75	8.55	
	0850	Sand & stone, loaded at pit, crushed bank gravel				C.Y.	16.10			16.10	17.70	
	0900	Sand, washed, for concrete					11.15			11.15	12.25	
	0950	For plaster or brick					23			23	25.50	
	1000	Stone, 3/4" to 1-1/2"					18.40			18.40	20	
	1055	Round, river stone					19.50			19.50	21.50	
	1100	3/8" roofing stone & 1/2" pea stone					23			23	25.50	
	1150	For trucking 10 miles, add to the above					4.90			4.90	5.40	
	1200	30 miles, add to the above				▼	10.85			10.85	11.95	
	1310	Quartz chips, 50 lb. bags				Cwt.	15.25			15.25	16.80	
	1330	Silica chips, 50 lb. bags				"	8.35			8.35	9.20	
	1350	Slag				Ton	7.75			7.75	8.55	
	1410	White marble, 3/8" to 1-1/2", 50 lb. bags				Cwt.	12.60			12.60	13.85	
	1430	3/4" F.O.B. plant				Ton	25.50			25.50	28	
.14	0010	**CEMENT** Material only R033-060										114
	0050	Masonry, gray, T.L. or C.L. lots				Bag	5.80			5.80	6.40	
	0060	L.T.L. or L.C.L. lots					5.60			5.60	6.15	
	0100	Masonry, white, T.L. or C.L. lots					15.85			15.85	17.45	
	0120	L.T.L. or L.C.L. lots					16.40			16.40	18.05	
	0240	Portland, type I, plain/air entrained, TL lots, 94 lb bags				▼	7			7	7.70	
	0300	Trucked in bulk, per cwt				Cwt.	4.05			4.05	4.45	
	0400	Type III, high early strength, TL lots, 94 lb bags				Bag	7.90			7.90	8.70	
	0420	L.T.L. or L.C.L. lots					8.90			8.90	9.80	
	0500	White high early strength, T.L. or C.L. lots, bags					16.90			16.90	18.60	
	0520	L.T.L. or L.C.L. lots					21.50			21.50	23.50	
	0600	White, T.L. or C.L. lots, bags					16.50			16.50	18.15	
	0620	L.T.L. or L.C.L. lots				▼	20			20	22	
118	0010	**CONCRETE ADMIXTURES & SURFACE TREATMENTS**										118
	0040	Abrasives, aluminum oxide, over 20 tons				Lb.	.88			.88	.97	
	0070	Under 1 ton					.92			.92	1.01	
	0100	Silicon carbide, black, over 20 tons					1.20			1.20	1.32	
	0120	Under 1 ton				▼	1.25			1.25	1.38	
	0200	Air entraining agent, .7 to 1.5 oz. per bag, 55 gallon lots				Gal.	7.40			7.40	8.10	
	0220	5 gallon lots					8.45			8.45	9.25	
	0300	Bonding agent, acrylic latex (200-250 S.F. per gallon)					26			26	28.50	
	0320	Epoxy resin (70-80 S.F. per gallon)				▼	50			50	55	
	0400	Calcium chloride, 100 lb. bags, FOB plant, truckload lots				Ton	330			330	365	
	0420	Less than truckload lots				Bag	19.75			19.75	21.50	
	0500	Carbon black, liquid, 2 to 8 lbs. per bag of cement				Lb.	2.85			2.85	3.14	
	0600	Colors, integral, 2 to 10 lb. per bag of cement, minimum					1.30			1.30	1.43	
	0610	Average					2.07			2.07	2.28	
	0620	Maximum				▼	3.69			3.69	4.06	
	0700	Curing compound, (200 to 400 S.F. per gallon), 55 gal. lots				Gal.	9.90			9.90	10.90	

033 100 | Structural Concrete

			CREW	DAILY OUTPUT	LABOR-HOURS	UNIT	1999 BARE COSTS MAT.	LABOR	EQUIP.	TOTAL	TOTAL INCL O&P	
4250	140 psi	R033 -060				C.Y.	51			51	56	126
4300	500 psi						53			53	58.50	
4350	1000 psi	R033 -070					56			56	62	
130 0010	**CONCRETE IN PLACE** Including forms (4 uses), reinforcing	R033 -100										130
0300	Beams, 5 kip per L.F., 10' span		C-14A	15.62	12.804	C.Y.	207	350	44	601	835	
0350	25' span	R033 -130	"	18.55	10.782		188	296	37	521	720	
0500	Chimney foundations, industrial, minimum		C-14C	32.22	3.476		126	91	1.15	218.15	285	
0510	Maximum		"	23.71	4.724		147	123	1.56	271.56	360	
0700	Columns, square, 12" x 12", minimum reinforcing		C-14A	11.96	16.722		210	460	57	727	1,025	
0800	16" x 16", minimum reinforcing			16.22	12.330		178	340	42	560	785	
0900	24" x 24", minimum reinforcing			23.66	8.453		149	232	29	410	565	
1000	36" x 36", minimum reinforcing			33.69	5.936		143	163	20.50	326.50	440	
1200	16" diameter, minimum reinforcing			31.49	6.351		211	174	21.50	406.50	535	
1300	20" diameter, minimum reinforcing			41.04	4.873		200	134	16.65	350.65	450	
1400	24" diameter, minimum reinforcing			51.85	3.857		188	106	13.20	307.20	390	
1500	36" diameter, minimum reinforcing			75.04	2.665		176	73	9.10	258.10	320	
3100	Elevated slabs including finish, not											
3110	including forms or reinforcing											
3150	Regular concrete, 4" slab		C-8	2,613	.021	S.F.	.77	.52	.25	1.54	1.91	
3200	6" slab			2,585	.022		1.21	.52	.25	1.98	2.40	
3250	2-1/2" thick floor fill			2,685	.021		.52	.50	.24	1.26	1.61	
3300	Lightweight, 110# per C.F., 2-1/2" thick floor fill			2,585	.022		.64	.52	.25	1.41	1.78	
3400	Cellular concrete, 1-5/8" fill, under 5000 S.F.			2,000	.028		.45	.67	.32	1.44	1.90	
3450	Over 10,000 S.F.			2,200	.025		.35	.61	.29	1.25	1.65	
3800	Footings, spread under 1 C.Y.		C-14C	38.07	2.942	C.Y.	89.50	77	97	167.47	223	
3850	Over 5 C.Y.			81.04	1.382		82.50	36	.46	118.96	149	
3900	Footings, strip, 18" x 9", plain			41.04	2.729		80.50	71.50	.90	152.90	204	
3950	36" x 12", reinforced			61.55	1.820		83	47.50	.60	131.10	168	
4000	Foundation mat, under 10 C.Y.			38.67	2.896		113	75.50	.96	189.46	247	
4050	Over 20 C.Y.			56.40	1.986		101	52	.66	153.66	194	
4200	Grade walls, 8" thick, 8' high		C-14D	45.83	4.364		97.50	119	14.90	231.40	310	
4250	14' high			27.26	7.337		124	199	25	348	480	
4260	12" thick, 8' high			64.32	3.109		89.50	84.50	10.65	184.65	244	
4270	14' high			40.01	4.999		99.50	136	17.10	252.60	345	
4300	15" thick, 8' high			80.02	2.499		85.50	68	8.55	162.05	210	
4350	12' high			51.26	3.902		89	106	13.35	208.35	281	
4500	18' high			48.85	4.094		99	111	14	224	300	
4520	Handicap access ramp, railing both sides, 3' wide		C-14H	14.58	3.292	L.F.	94.50	89	2.57	186.07	248	
4525	5' wide			12.22	3.928		108	106	3.06	217.06	290	
4530	With cheek walls and rails both sides, 3' wide			8.55	5.614		96.50	151	4.38	251.88	350	
4535	5' wide			7.31	6.566		97	177	5.10	279.10	395	
4650	Slab on grade, not including finish, 4" thick		C-14E	60.75	1.449	C.Y.	73.50	39	.62	113.12	145	
4700	6" thick		"	92	.957	"	70.50	25.50	.41	96.41	120	
4751	Slab on grade, incl. troweled finish, not incl. forms											
4760	or reinforcing, over 10,000 S.F., 4" thick slab		C-14F	3,425	.021	S.F.	.79	.52	.01	1.32	1.67	
4820	6" thick slab			3,350	.021		1.16	.53	.01	1.70	2.09	
4840	8" thick slab			3,184	.023		1.59	.56	.01	2.16	2.60	
4900	12" thick slab			2,734	.026		2.38	.65	.01	3.04	3.63	
4950	15" thick slab			2,505	.029		2.99	.71	.01	3.71	4.39	
5000	Slab on grade, incl. textured finish, not incl. forms											
5001	or reinforcing, 4" thick slab		C-14G	2,873	.019	S.F.	.79	.48	.01	1.28	1.61	
5010	6" thick			2,590	.022		1.24	.53	.01	1.78	2.18	
5020	8" thick			2,320	.024		1.62	.59	.02	2.23	2.70	
5200	Lift slab in place above the foundation, incl. forms,											
5210	reinforcing, concrete and columns, minimum		C-14B	2,113	.098	S.F.	4.74	2.69	.32	7.75	9.85	

2026	**200 GPM, 6,000 Lb Fill, 316L Stainless Steel, Permanent**	**EA**				**822.80**	**273.96**	**20,325**	**21,422**
1238	200 GPM, 6,000 Lb Fill, 316L Stainless Steel, Permanent	EA	0.125	MPLUS	1.00	822.80	273.96	20,325	21,422
13 2027	**Dual Bed, 50 GPM Series, 100 GPM Parallel, 1,760 Lb Fill Each**	**EA**				**822.80**	**273.96**	**12,120**	**13,217**
13274 1239	Dual Bed, 50 GPM Series, 100 GPM Parallel, 1,760 Lb Fill, 316L Stainless Steel	EA	0.125	MPLUS	1.00	822.80	273.96	12,120	13,217
13 2028	**Dual Bed, 75 GPM Series, 150 GPM Parallel, 3,300 Lb Fill Each**	**EA**				**822.80**	**273.96**	**18,180**	**19,277**
13274 1241	Dual Bed, 75 GPM Series, 150 GPM Parallel, 3,300 Lb Fill, 316L Stainless Steel	EA	0.125	MPLUS	1.00	822.80	273.96	18,180	19,277
33 13 2029	**Dual Bed, 2 - 4' Diameter, 65 GPM Series, 130 GPM Parallel, 2,000 Lb Each**	**EA**				**6,310**	**2,101**	**29,290**	**37,701**
13274 1244	Dual Bed, 65 GPM Series, 130 Parallel, 4' Diameter, 2,000 Lb Carbon	EA	0.016	MPLUS	1.00	6,310	2,101	29,290	37,701
33 13 2030	**Dual Bed, 2 - 7.5' Diameter, 175 GPM Series, 350 GPM Parallel, 10,000 Lb Each**	**EA**				**9,252**	**2,101**	**84,120**	**95,472**
13274 1245	Dual Bed, 175 Series, 350 Parallel, 7.5' Diameter, 10,000 Lb	EA	0.016	MSPFW	1.00	9,252	2,101	84,120	95,472
33 13 2031	**Dual Bed, 2 - 10' Diameter, 350 GPM Series, 700 GPM Parallel, 20,000 Lb Each**	**EA**				**10,597**	**2,920**	**132,687**	**146,204**
1246	Dual Bed, 350 Series, 700 Parallel, 10' Diameter, 20,000 Lb	EA	0.016	MSPFX	1.00	10,597	2,920	132,687	146,204
33 13 2032	**Dual Bed, 2 - 12' Diameter, 350 GPM Series, 700 GPM Parallel, 20,000 Lb Each**	**EA**				**10,597**	**2,920**	**142,400**	**155,917**
13274 1247	Dual Bed, 350 Series, 700 Parallel, 12' Diameter, 20,000 Lb	EA	0.016	MSPFX	1.00	10,597	2,920	142,400	155,917
33 13 2041	**Prefilter/Postfilter Housing & Cartridge to 20 GPM**	**EA**				**51.42**	**17.12**	**237.50**	**306.05**
13274 1242	Prefilter/Postfilter Housing and Cartridge to 20 GPM	EA	2	MPLUS	1.00	51.42	17.12	237.50	306.05
33 13 2042	**Replacement High-capacity Prefilter Cartridges**	**EA**				**0.00**	**0.00**	**35.00**	**35.00**
13274 1243	Replacement High-capacity Pre-filter Cartridges	EA	0	N/A	1.00	0.00	0.00	35.00	35.00
33 13 2051	**Coal-based General Purpose, 8 x 30 Sieve, 900 Iodine, < 2,000 Lb**	**LB**				**0.00**	**0.00**	**1.28**	**1.28**
13274 1251	Coal Based General Purpose, 8 x 30 Sieve, 900 Iodine, < 2,000 Lb	LB	0	N/A	1.00	0.00	0.00	1.28	1.28
33 13 2052	**Coal-based General Purpose, 8 x 30 Sieve, 900 Iodine, 2,000 - 10,000 Lb**	**LB**				**0.00**	**0.00**	**1.00**	**1.00**
13274 1252	Coal Based General Purpose, 8 x 30 Sieve, 900 Iodine, 2,000 - 10,000 Lb	LB	0	N/A	1.00	0.00	0.00	1.00	1.00

1999 by ECHOS. All rights reserved

33 13 2053		**Coal-based General Purpose, 8 x 30 Sieve, 900 Iodine, > 10,000 Lb**	**LB**				**0.00**	**0.00**	**0.83**	
13274	1253	Coal Based General Purpose, 8 x 30 Sieve, 1,100 Iodine, > 10,000 Lb	LB	0	N/A	1.00	0.00	0.00	0.83	
33 13 2054		**Coconut-based, High Capacity, 12 x 30 Sieve, 1100 Iodine, < 2,000 Lb**	**LB**				**0.00**	**0.00**	**1.28**	
13274	1254	Coconut Based, High Capacity, 12 x 30 Sieve, 1,100 Iodine, < 2000 Lb	LB	0	N/A	1.00	0.00	0.00	1.28	
33 13 2055		**Coconut-based, High Capacity, 12 x 30 Sieve, 1100 Iodine, 2,000 - 10,000 Lb**	**LB**				**0.00**	**0.00**	**1.00**	
13274	1255	Coconut Based, High Capacity, 12 x 30 Sieve, 1,100 Iodine, 2,000 - 10,000 Lb	LB	0	N/A	1.00	0.00	0.00	1.00	
33 13 2056		**Coconut-based, High Capacity, 12 x 30 Sieve, 1100 Iodine, > 10,000 Lb**	**LB**				**0.00**	**0.00**	**0.78**	
13274	1256	Coconut Based, High Capacity, 12 x 30 Sieve, 1,100 Iodine, > 10,000 Lb	LB	0	N/A	1.00	0.00	0.00	0.78	
33 13 2057		**Activated Aluminas for Highly Oxidizable Contaminants**	**LB**				**0.00**	**0.00**	**0.66**	
13274	1257	Activated Aluminas for Highly Oxidizable Contaminants	LB	0	N/A	1.00	0.00	0.00	0.66	
33 13 2058		**Reactivation or Thermal Regeneration of Carbon**	**LB**				**0.00**	**0.00**	**0.50**	
13274	1258	Reactivation or Thermal Regeneration of Carbon	LB	0	N/A	1.00	0.00	0.00	0.50	
33 13 2059		**Remove Carbon from Vessels, 10,000 - 20,000 Lb Minimum, Transport & Reactivate**	**LB**				**0.00**	**0.00**	**0.66**	
13274	1259	Remove Carbon from Vessels, 10,000 -20,000 Lb Minimum, Transport & Reactivate	LB	0	N/A	1.00	0.00	0.00	0.66	
33 13 2065		**Removal, Transport, Regeneration of Spent Carbon, < 2K lb**	**LB**				**0.00**	**0.00**	**0.55**	
01001	0188	Removal, Transport, Regeneration of Spent Carbon, < 2K lb	LB	0	N/A	1.00	0.00	0.00	0.55	
33 13 2066		**Removal, Transport, Regeneration of Spent Carbon, < 2K to 10 K lb**	**LB**				**0.00**	**0.00**	**0.25**	
01001	0189	Removal, Transport, Regeneration of Spent Carbon, < 2K to 10 K lb	LB	0	N/A	1.00	0.00	0.00	0.25	
33 13 2067		**Coal-based General Purpose, 8 x 30 Sieve, 900 Iodine, < 2,000 Lb**	**LB**				**0.00**	**0.00**	**1.28**	
13274	1251	Coal Based General Purpose, 8 x 30 Sieve, 900 Iodine, < 2,000 Lb	LB	0	N/A	1.00	0.00	0.00	1.28	
33 13 2068		**Coal-based General Purpose, 8 x 30 Sieve, 900 Iodine, 2,000 - 10,000 Lb**	**LB**				**0.00**	**0.00**	**1.00**	
13274	1252	Coal Based General Purpose, 8 x 30 Sieve, 900 Iodine, 2,000 - 10,000 Lb	LB	0	N/A	1.00	0.00	0.00	1.00	

1999 by ECHOS. All rights reserved

2069	**Coal-based General Purpose, 8 x 30 Sieve, 900 Iodine, > 10,000 Lb**	**LB**				**0.00**	**0.00**	**0.83**	**0.83**
1253	Coal Based General Purpose, 8 x 30 Sieve, 1,100 Iodine, > 10,000 Lb	LB	0	N/A	1.00	0.00	0.00	0.83	0.83
13 2070	**Coal Based, 4MM Pellet, For Solvent Recovery < 2000 Lb Disposable**	**LB**				**0.00**	**0.00**	**1.70**	**1.70**
0190	Coal Based, 4MM Pellet, For Solvent Recovery < 2000 Lb Disposable	LB	0	N/A	1.00	0.00	0.00	1.70	1.70
13 2071	**Coal Based, 4MM Pellet, For Solvent Recovery 2K-10K Lb Disposable**	**LB**				**0.00**	**0.00**	**1.40**	**1.40**
01001 0191	Coal Based, 4MM Pellet, For Solvent Recovery 2K-10K Lb Disposable	LB	0	N/A	1.00	0.00	0.00	1.40	1.40
33 13 2072	**Coal Based, 4MM Pellet, For Solvent Recovery > 10000 Lb Disposable**	**LB**				**0.00**	**0.00**	**1.30**	**1.30**
01001 0192	Coal Based, 4MM Pellet, For Solvent Recovery > 10000 Lb Disposable	LB	0	N/A	1.00	0.00	0.00	1.30	1.30
33 13 2073	**Remove and Dispose of Spent Carbon from Water Treatment**	**LB**				**0.00**	**0.00**	**0.25**	**0.25**
01001 0193	Remove and Dispose of Spent Carbon from Water Treatment	LB	0	N/A	1.00	0.00	0.00	0.25	0.25
33 13 2074	**Remove and Dispose of Spent Carbon from Offgas Treatment**	**LB**				**0.00**	**0.00**	**0.25**	**0.25**
01001 0194	Remove and Dispose of Spent Carbon from Offgas Treatment	LB	0	N/A	1.00	0.00	0.00	0.25	0.25

3 23 Vapor Extraction

		Unit	Hourly Output	Crew	Factor	Labor	Equip	Material	Total
33 13 2301	**1 HP, 115V, 98 SCFM, Vapor Recovery System**	**EA**				**299.60**	**0.00**	**3,359**	**3,658**
13273 4314	Vapor Recovery System, 1 HP, 115V, 98 SCFM	EA	0.25	ACMAE	1.00	299.60	0.00	3,359	3,658
33 13 2302	**1 HP, 230V, 98 SCFM, Vapor Recovery System**	**EA**				**299.60**	**0.00**	**3,406**	**3,706**
13273 4315	Vapor Recovery System, 1 HP, 230V, 98 SCFM	EA	0.25	ACMAE	1.00	299.60	0.00	3,406	3,706
33 13 2303	**1 1/2 HP, 230V, 127 SCFM, Vapor Recovery System**	**EA**				**299.60**	**0.00**	**4,250**	**4,550**
13273 4316	Vapor Recovery System, 1-1/2 HP, 230V, 127 SCFM	EA	0.25	ACMAE	1.00	299.60	0.00	4,250	4,550
33 13 2304	**2 HP, 230V, 160 SCFM, Vapor Recovery System**	**EA**				**299.60**	**0.00**	**5,068**	**5,367**
13273 4317	Vapor Recovery System, 2 HP, 230V, 160 SCFM	EA	0.25	ACMAE	1.00	299.60	0.00	5,068	5,367
33 13 2305	**5 HP, 230V, 280 SCFM, Vapor Recovery System**	**EA**				**299.60**	**0.00**	**6,463**	**6,763**
13273 4318	Vapor Recovery System, 5 HP, 230V, 280 SCFM	EA	0.25	ACMAE	1.00	299.60	0.00	6,463	6,763

1999 by ECHOS. All rights reserved

Central Clay Products
101 Scott St.
Wilkes-Barre, PA 18702
570-823-2164
John Cavanaugh, Jr.

			Rate	Amount
ADS Corrugated Pipe				
12"	40	lf	$ 2.70	$ 108.00
15"	120	lf	$ 3.55	$ 426.00
18"	320	lf	$ 5.45	$ 1,744.00
24"	730	lf	$ 8.55	$ 6,241.50
36"	760	lf	$ 17.65	$ 13,414.00
48"	1891.5	lf	$ 26.90	$ 50,881.35
6" Underdrain Perf.	600	lf	$ 0.51	$ 306.00
6" Cplgs		ea	$ 1.65	
24" 30 deg bend		ea	$ 156.00	
36" 30 deg bend		ea	$ 270.00	
			Pipe $ include 1 cplg/len	
			FOB site	
Class III RCP				
18"	80	lf	$ 7.80	$ 87.80
24"	384	lf	$ 12.35	$ 396.35
30"	232	lf	$ 18.60	$ 250.60
42"	24	lf	$ 34.90	$ 58.90
Bitumastic Jt Cmpd	1	5 gal pail	$ 17.50	
			FOB site	
PVC SDR 26/35 Gskt Jts				
12"	4511	lf	$ 5.10	$ 23,006.10
8"	819	lf	$ 2.15	$ 1,760.85
6"	26	lf	$ 1.30	$ 33.80
4"	52	lf	$ 0.60	$ 31.20
			FOB site	
Precast Headwall/Endwall				
Type D 12" - 24" ADS	1	ea	$ 305.00	
Type D 24" RCP	1	ea	$ 305.00	
Type D 30" RCP	1	ea	$ 530.00	
Type D 36" RCP	1	ea	$ 530.00	
Type DE 15" ADS	1	ea	$ 805.00	
Type DE 24" ADS	1	ea	$ 1,450.00	
Type DW 36" ADS	1	ea	$ 925.00	
Type DW-2 2x36"	1	ea	$ 3,125.00	
Type DW-3 3x48"	1	ea	$ 5,300.00	
			FOB site	
DI, cement lined, asphaltic coated, tyton jts				
4" class 54	216	lf	$ 8.40	$ 1,814.40
10" class 53	252	lf	$ 16.55	$ 4,170.60
16" class 53	4482	lf	$ 34.00	$ 152,388.00
16"x 6" MJ Tee compact w/ acc		ea	$ 452.00	
16" MJ 22.5 bend		ea	$ 325.00	
16" MJ sleeve		ea	$ 275.00	
10" MJ sleeve		ea	$ 90.00	
4" MJ sleeve		ea	$ 37.95	
16" MJ caps, 2" tap		ea	$ 189.50	
10" MJ plug 2" tap		ea	$ 42.00	
4" MJ plug 2" tap		ea	$ 17.95	
16" Megalugs		ea	$ 102.00	
10" Megalugs		ea	$ 41.90	
4" Megalugs		ea	$ 16.50	
			Quote incudes pipe wrap	
Fire Hydrants 5.25 M.V.O.	4	ea	$ 975.00	

6" CI Gate Valve	4 ea	$ 285.00
Valve Box	4 ea	$ 52.00
		FOB site
Precast Reinf. Conc. MH		
48" Base	ea	$ 226.50
48" Riser 2', 3', 4'	vf	$ 36.50
48" Cone	vf	$ 36.50
48" Riser 1'	ea	$ 47.00
48" Flat Slab 6" thk	ea	$ 110.00
48" Coal Tar Epoxy	vf	$ 8.25
Flow Channels	ea	$ 85.00
Flex Boots	in. dia.	$ 4.25
Bolt Inserts	ea	$ 4.40
Rub 'R' Nek Jt Cmpd	jt	$ 6.00
72" Base	ea	$ 925.00
72" Riser	vf	$ 115.00
72"x60" Conversion Cone	ea	$ 208.00
60"x48"Conversin Slab	ea	$ 165.00
72"Conversion Slab	ea	$ 208.00
Coal Tar Epoxy	vf/coat	$ 11.00
Rub 'R' Nek Jt Cmpd	jt	$ 10.00
24" MH Frame & Cover	set	$ 140.00
Precast Reinf. Conc. Conc.		
24x45.25 ID	ea	$ 240.00
Risers	vf	$ 55.50
MH steps	ea	$ 17.50
Type C alternate PC top	ea	$ 160.00
Type C Frames w/ grate	ea	$ 325.00
Type S Precast Top	ea	$ 270.00
		FOB site
36" CMP Riser Asmbly incl. Tr R	ea	$ 1,900.00
36" CMP Pipe	ft	$ 13.50
36" Bands	ea	$ 13.50
36" Anti-Seep Collars	ea	$ 475.00
16" CI Gate Valves Mech Jt	ea	$ 2,795.00
16" Megalugs	ea	$ 102.00
12" PVC Sch 40 Perf	ft	$ 7.95
12" PVC DMV Cplg	ea	$ 32.00
Class II, Type B Geotextile	sy	$ 0.42
Class II, Type A Geotextile	sy	$ 0.44
Class I, Geotextile	sy	$ 0.42
30" Silt Fence 52" rolls	ft	$ 0.65
		FOB site
30" CS Pipe .375" thk	ft	$ 74.95
30" CS Pipe .5" thk	ft	$ 99.00

Hanson Aggregates PA
P.O. Box 127
Lake Ariel, PA 18436
570-698-5631
Paul Zaccagnino

			Rate	Amount
Paving				
BCBC 6"	17865	sy	$ 8.35	$ 149,172.75
Subbase No. 2A	30384	sy	$ 7.60	$ 230,918.40
Bit. Wrg Crse ID-2 1 1/2"	21893	sy	$ 3.00	$ 65,679.00
Bit. Binder Crse ID-2 2"	17865	sy	$ 3.35	$ 59,847.75
Tack Coat	39758	sy	$ 0.15	$ 5,963.70
Mobilization	1	ls	$ 4,500.00	$ 4,500.00
6" Pavement Base Drain	555	lf	$ 11.60	$ 6,438.00
Paved Shoulder	8190	sy	$ 11.75	$ 96,232.50
Selected Material Surfacing	10495	sy	$ 4.50	$ 47,227.50
				$ 665,979.60

ModuTank Inc. www.thomasregister.com/modutankinc

41-04 35th Ave, Long Island City, NY 11101 (800)245-6964 NY (718)392-1112 FAX (718)786-1008

July 29, 1999

Mr. John Sontag
Roy F. Weston
1400 Weston Way
Westchester, PA 19380

VIA FAX: (610) 701-7597
TEL: (610) 701-3737

Reference: **Quotation # R 1321-99**

Dear Mr. Sontag:

Thank you for your inquiry regarding a dredge sediment holding tank for your Kearney, New Jersey project.

We are enclosing the rental/purchase agreement rental for our 300,000 gallon **Model ET 2525** EconoTank. We have also included our product brochure which describes the EconoTank well as our various other containment systems, a plan, elevation, section view of the EconoTank, and samples of 20 mil polyethylene and 8 oz. geotextile with accompanying technical data.

Please review the comments in the attached membrane liner explanation sheet with regard to the applicability of the 20 mil polyethylene liner to your project.

Estimated freight to Kearney, New Jersey: $1,100.00

Estimated return freight (steel components only) to ModuTank Inc. upon conclusion of rental agreement: $ 650.00

We look forward to being of service to you.

Very truly yours,

Asher B. Etkes
ABE/bg
Encs.
modu99\abe\roy\0729

ModuTank Inc. www.thomasregister.com/modutankinc

41-04 35th Ave, Long Island City, NY 11101 (800)245-6964 NY (718)392-1112 FAX (718)786-1008

ECONOTANK RENTAL/PURCHASE AGREEMENT

1. Rental is for steel parts only. Minimum rental is one (1) month.

2. Liner(s) and underlayment are expendable and are purchased by renter. (Terms: 1% 10, Net 30 days, FOB shipping point). Optional cover and/or fittings are also purchased. All steel components are warranted against defective materials and workman-ship for one year from date of shipment. Liners and covers are warranted to be mechanically sound when shipped. ModuTank Inc. will replace or repair liners and covers when there is a defect in material or shop fabrication. Where damage is caused by problems in transport or installation, ModuTank Inc. will assist purchaser in resolving such problems. ModuTank Inc. is not responsible for consequential damages. For critical applications tanks must be filled with clean water by purchaser to check for liner integrity before tank is placed into service.

3. Renter pays deposit for steel parts and rental for first month prior to shipment.

4. Rental payments are due and payable on first of every month during rental period.

5. Rental period extends from date tank is shipped by ModuTank Inc. to date steel arrives back at ModuTank Inc.

6. Renter is responsible for all installation and dismantling costs including replacement of any parts found to be defective and replaced by ModuTank Inc. at no charge for materials only.

7. Renter pays all freight charges to and from renter. ModuTank Inc. will make shipments on a freight prepaid & add basis, unless otherwise requested. Invoices for freight charges will be submitted by ModuTank Inc. and must be paid within ten (10) days of shipment.

8. Deposit is refunded when rental is terminated and steel is returned in clean, reusable condition, free from corrosion and hazardous or noxious residues and securely packed on skids. Renter pays for unusable or lost parts.

9. All prices are exclusive of applicable taxes, site preparation, installation, piping, bulkhead fittings, ancillaries or any on-site supervision by ModuTank Inc. Rental rates and prices quoted herein are valid for 30 days from date.

10. Renter agrees to hold ModuTank Inc. harmless from any liabilities associated with receipt, installation, use, disassembly, and transport of tank and also agrees to provide sufficient insurance to cover potential liabilities.

11. Steel components may be purchased at any time. Full deposit and one-half of rents paid are credited toward purchase price.

12. Galvanized cables must be replaced at 24-month intervals and are supplied to renter at no cost. Renter is responsible for installation which includes removing and reinstalling liners.

13. ModuTank Inc. makes no warranty as to fitness for a specific use, offers no guarantee of satisfactory results and disclaims all liability for any losses resulting from application of these products or from late arrival at installation site.

FOR TANK(S) QUOTED --- DEPOSIT AND MONTHLY RENTAL RATES PER TANK ARE AS FOLLOWS:

ECONOTANK MODEL #ET 2525 **DIMENSIONS**: 94'3"x 94'3" x 4'9" HIGH
300,000 Gallons (with 3" freeboard) - Liner: 20 mil reinforced Polyethylene
Cover: 20 mil reinforced Polyethylene
Shipping Weight: 15,000 lbs.

RENTAL/PURCHASE PRICES:

1. Deposit	$ 2,252.00
2. Monthly rental (steel parts) months 1- 5	$ 2,252.00
3. Monthly rental (steel parts) months 6 - thereafter	$ 1,501.00
4. Purchase price steel parts	$22,520.00
5. Purchase price liner	$ 3,810.00
6. Purchase price floating cover	$ 5,145.00
7. Purchase price geotextile underlayment	$ 1,385.00
8. Purchase price complete tank (Items 4, 5, 6) if steel is initially purchased and not rented	$27,715.00

RENTER: ROY F WESTON
BY:
TITLE:
DATE:

BY: _____
MODUTANK INC.

modu99\abe\roy0729R

HIGH FLOW BAG FILTER HOUSINGS

STANDARD HOUSINGS

- Carbon or stainless steel housings
- Quick open V band clamp for speedy bag filter removal
- Patented safety latch design cover with handles and standard air vent
- Adjustable legs
- 2" NPT side inlet and bottom outlet
- Includes 316 stainless steel bag support

Parker Filtration

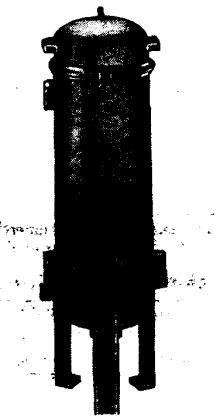

Economical FCB series housings are for manufacturing, commercial and industrial applications requiring fluid filtration. Units come complete with bag support; use with filter bag (order bags separately on facing page) for attaining varying degrees of filtration. Bag filtration assemblies can be used for filtering water and thick liquids such as coolants, cutting oils, inks, lubricants, paints, resins, solvents, adhesives, and petroleum oils. For use with nonflammable liquids compatible with filter component materials.

Handle flow rates to 100 GPM (water), liquid pressures to 100 PSI and liquid temperatures to 200°F.

Construction: Carbon or 304 stainless steel housings depending on model. Buna N O-ring cover seal. 316 SS bag support. Check application for chemical compatibility.

Two housing lengths: Filter housings for (single) size 1 or (double) size 2 length bags depending on filtering needs and preference.

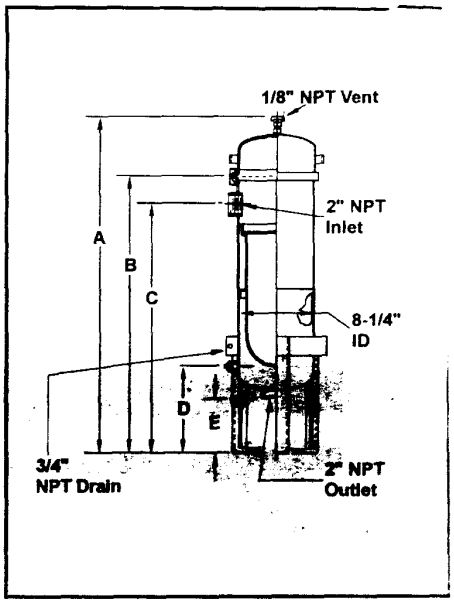

Material	Maximum Flow (GPM)	Filter Bag Size	Dimensions (Inches) A	B	C	D	E	Parker Model	Stock No.	List	Each	Shpg. Wt.
Carbon Steel	80	1	35½	29½	26⅞	9¼	5½	FCB-11	**2P839**	$960.29	**$919.00**	37.0
Carbon Steel	100	2	47⅛	41¼	38⅝	9¼	5½	FCB-12	**2P840**	1092.23	**1047.00**	49.0
304 Stainless Steel	80	1	35½	29½	26⅞	9¼	5½	4FCB-11	**2P841**	1742.75	**1638.00**	37.0
304 Stainless Steel	100	2	47⅛	41¼	38⅝	9¼	5½	4FCB-12	**2P842**	1893.05	**1795.00**	49.0

ASME-CODED HOUSINGS

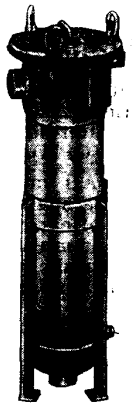

- ASME Coded (UM Stamp) to meet requirements for boilers and pressure vessels
- Carbon and 304L stainless steel housings
- Welded design provides a smooth interior for easy washout and cleaning
- Swing bolts with eyenuts for fast, easy opening and closing of hinged cover

Parker Fulflo® FB bag filter housings are designed for economical filtration of liquids such as: potable and process water, edible oils, coatings, lubricants, coolants, cutting oils, solvents, and other liquids. Maximum operating pressure is 150 PSI at 250°F.

Single Buna N O-ring seal design assures quick, positive cover seal. Housing also features height adjustable legs, side inlet with bottom outlet and threaded vent and drain connections. Filter housings are available in two lengths for either (single) size 1 or (double) size 2 filter bags.

Manufacturer's ASME Code Data Report (UM) is included with each bag filter housing. Parker Filtration brand.

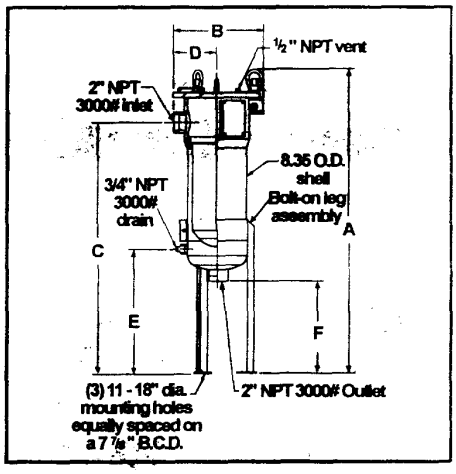

Material	Maximum Flow (GPM)	Filter Bag Size	Dimensions (Inches) A	B	C	D	E	F	Parker Model	Stock No.	List	Each	Shpg. Wt.
Carbon Steel	80	1	43	12½	35 11/16	6	13 3/16	17¾	FSB11-2	**5P293**	$1284.98	**$1148.00**	103.0
Carbon Steel	160	2	53	12½	45¾	6	13 3/16	17¾	FSB12-2	**5P294**	1364.14	**1266.00**	110.0
304L Stainless Steel	80	1	43	12½	35 11/16	6	13 3/16	17¾	4LFSB11-2	**5P295**	2183.31	**2115.00**	103.0
304L Stainless Steel	160	2	53	12½	45¾	6	13 3/16	17¾	4LFSB12-2	**5P296**	2267.07	**2138.00**	110.0

FILTER HOUSING CROSS REFERENCE

Stock No.	Parker Model	Strainrite	Filter Specialists Inc.	Rosedale	Filtration Systems/Components
2P839	FCB-11	UFI-90	BFNS11-1-CS-150-2	8152P1NCBN-2B	—
2P840	FCB-12	UFI-180	BFNS12-1-CS-150-2	8302P1NCBN-2B	—
2P841	4FCB-11	UFI-90-304	BFNS11-1-304-150-2	8152P1NSBN-2B	—
2P842	4FCB-12	UFI-180-304	BFNS12-1-304-150-2	8302P1NSBN-2B	—
5P293	FB11-2	UFI-90	FSP40	8152P2UMCBPP	C112
5P294	FB12-2	UFI-180	FSP85	8302P2UMCBPP	C122
5P295	4LFB11-2	UFI-90-304	FSP40 (304SS)	8152P2UMSBPP	S112
5P296	4LFB12-2	UFI-180-304	FSP85 (304SS)	8302P2UMSBPP	S122

See Cross Reference Information on page opposite inside back cover.

godwin pumps of America
31 Clinton Avenue
Norwich, Connecticut 06360
Telephone: (860) 889-2343
Facsimile: (860) 889-0673

RECEIVED JUL 16 1999 ROY F. WESTON, INC.

July 9, 1999

Roy F. Weston
1 Wall Street
Manchester, NH 03101

Attention: Mr. Tony Delano

Phone: (603)656-5537
Fax: (603)656-5401

RE: Rental Quotation CJH947

Dear Mr. Delano:

Thank you for calling Godwin Pumps of America, Inc. Per your request enclosed please find our quotation for the sale of equipment for the Housatonic River By-pass in Pittsfield, MA.

If after reviewing this proposal you should have any questions, please contact me at (860) 889-2343.

Sincerely,

GODWIN PUMPS OF AMERICA, INC.

Carroll Hunnewell/lj

Carroll Hunnewell
Northeast Regional Manager

CJH/lj

July 9, 1999
Roy F. Weston
Attention: Mr. Tony Delano
Page 2

**** SALE QUOTATION ****
10' to 20' Suction Lift
100 CFS Flow @ 44,800 GPM
4,100 GPM per Pump @ 70 TDH
65 MGD
(2) 30" Discharge Lines for 1,500'

ITEM	QTY	DESCRIPTION	UNIT SALES PRICE	TOTAL SALE PRICE
A	12	Godwin Dri-Prime® Model DPC300 Automatic Self-Priming (to 28 feet) Diesel Pumpset • 12" Quick Disconnect Suction and Flange Discharge Connection. • Solids handling to 3¼". • Dry Running Oil Lubricated Seal. • Driven by John Deere 6068T, 150 HP, water cooled diesel engine. • Skid mounted with integral 105 or 150 gallon fuel tank and lifting bracket. • Cowl Mufflers • Average fuel consumption 5.8 GPH.	$ 59,600.00	$715,200.00
B	2	Godwin Dri-Prime® Model DPC300 Automatic Self-Priming (to 28 feet) Diesel Pumpset. • 12" Quick Disconnect Suction and Flange Discharge Connection. • Cowl Muffler • Stand-by Unit	$59,600.00	$119,200.00

July 9, 1999
Roy F. Weston
Attention: Mr. Tony Delano
Page 3

****SALE QUOTATION ****
10' to 20' ** Suction Lift
100 CFS Flow @ 44,800 GPM
4,100 GPM per Pump @ 70 TDH
65 MGD
(2) 30" Discharge Lines for 1,500'

ITEM	QTY	DESCRIPTION	UNIT SALE PRICE	TOTAL SALE PRICE
C	56	12" X 10' Suction Hose with Godwin Quick Disconnect Fittings	$ 1,413.00	$ 79,128.00
D	14	12" Suction Screen with Godwin Quick Disconnect Fittings	$ 450.00	$ 6,300.00
E	10	Murphy-matic Control Panel with 60' float switches.	$ 2,890.00	$ 28,900.00
F	14	12" 90° Bend, Flanged	$ 348.00	$ 4,872.00
G	14	12" Check Valves, Flanged	$ 2,216.00	$ 31,024.00
H	400	12" HDPE Discharge Pipe SDR 26	$ 8.30 Per Foot	$ 3,320.00
I	28	12" HDPE Flange Adapter with Back-up Ring SDR 17	$ 230.00	$ 6,440.00
J	2	(7) 12" Flange Inlet X (1) 30" Flange Outlet Manifold Steel with #150 Flanges	$ 12,500.00	$ 25,000.00
K	2	30" HDPE 90° Bend SDR 21	$ 1,600.00	$ 3,200.00

July 9, 1999
Roy F. Weston
Attention: Mr. Tony Delano
Page 4

**** SALE QUOTATION ****
10' to 20' Suction Lift
100 CFS Flow @ 44,800 GPM
4,100 GPM per Pump @ 70 TDH
65 MGD
(2) 30" Discharge Lines for 1,500'

ITEM	QTY	DESCRIPTION	UNIT SALES PRICE	TOTAL SALE PRICE
L	2	30" HDPE 45° Bend SDR 21	$ 900.00	$ 1,800.00
M	6	30" HDPE Flange Adapter with Back-up Ring SDR 21	$ 900.00	$ 5,400.00
N	3000	30" HDPE Pipe SDR 21	$ 38.00 Per Foot	$ 114,000.00
O	2	500 Gallon Fuel Tanks with 2 Pump Connection	$ 4,500.00	$ 9,000.00
P	1	Nuts, Bolts, and Gaskets Sets	$ 3,200.00	$ 3,200.00
		TOTAL SALE PRICE		**$1,155,984.00**

Transportation Charge:
(17) Tractor Trailer Trucks @ $950 each way per load
Total Estimated Transportation Charge: $16,150

DPC 300 Dri-Prime® Pumps

The Godwin DPC 300 automatic Dri-Prime® 12" centrifugal pump is the recognized industry leader in high volume by-pass pumping with more than 2500 jobs over the last ten years to it's credit. Flows to 5800 gallons per minute, solids handling to 3 1/2", the DPC 300 moves serious amounts of water while providing the ease of automatic priming to 28 feet. The convenience of a low profile discharge flange makes pipe connections easy and efficient. When the job calls for high volume, the Godwin DPC 300 is the benchmark by which all others are judged.

Features

- Direct drive automatic priming 12" high volume centrifugal pump with vacuum priming compressor mounted to a diesel engine. Available in electric drive or as bare shaft pump end.
- All cast iron construction with 4 vane cast iron impeller.
- Extensive application flexibility – will handle raw sewage, sludges and liquids with solids up to 3 1/2" diameter.
- Continuously operated "Godwin" patented air elector priming device requiring no form of periodic adjustment or control.
- Dry running, oil lubricated, mechanical seal with abrasion resistant solid silicon carbide interfaces.
- Solids handling swing check non-return valve at pump discharge.
- Skid base incorporating integral overnight running fuel tank.
- Very simple maintenance – normally confined to checking engine oil and seal lubrication.
- Standard engine – John Deere 6068T. Available with a variety of engines including Cummins, Caterpillar and Deutz.
- Low profile side discharge for easy pipe connection.
- Balanced unit with centralized lifting bracket for easy handling.

godwin pumps

DPC 300 Performance Curve

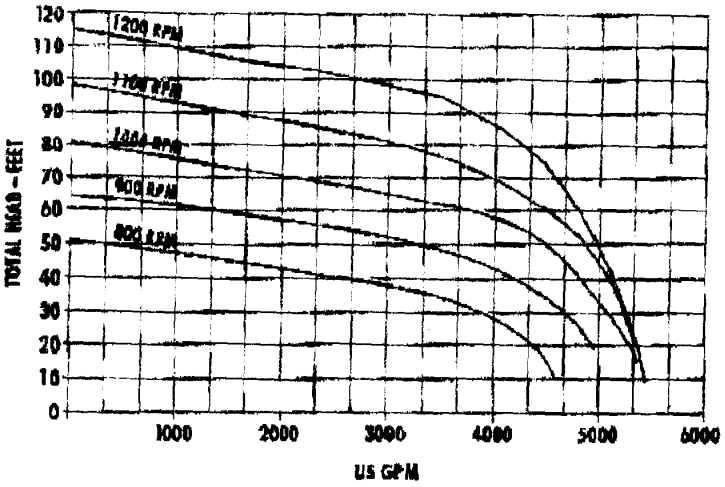

Performance Table

Diesel Set – John Deere 6068T, 147 hp @ 2000 rpm – Skid Base
Impeller Diameter – 17 inches (430mm)

	Total Delivery Head – Feet				
Total Suction	10	20	30	40	50
Head – Feet	Output – GPM				
10	5810	5620	5000	4490	3115
15	5500	5140	4810	3900	2210
20	4810	4500	3960	2850	1610
25	3420	3730	3010	2005	960

MANOMETRIC or TOTAL Heads are given in the rating tables and curves based on water tests at sea level and 68° F (20° C).

For *maximum* flows, larger diameter pipes may be required.

DPC 300 – John Deere 6068T – Skid Base

Dimensions (inches) Dry weight (lbs) – 7000 lbs

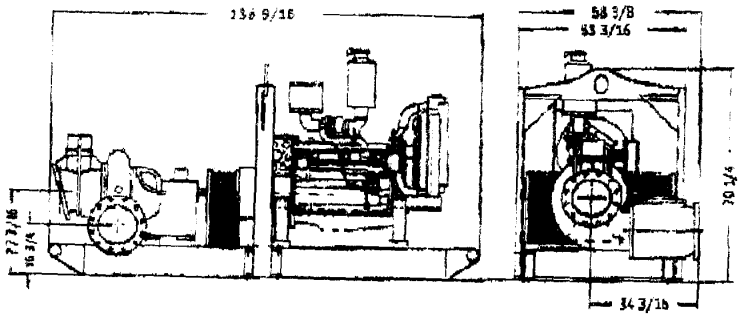

Technical Notes:

Maximum operating speed:
Engine: 2450 rpm/Pump: 1200 rpm

Maximum operating temperature:
+176°F (80°C)

Maximum working pressure:
52.0 psi

Maximum suction pressure:
15.0 psi

Maximum casing pressure:
60.0 psi

Fuel tank capacity:
105 gallons

Fuel consumption:
6.24 gph (max)

Pipe connections:
12 inch ASA 150#

Solids handling:
3½" diameter

Material Specifications:

Pump casing, suction cover, separation tank and wearplates:
close grained cast iron

Shaft:
1¼% nickel/chromium steel

NRV Body-Ejector Housing:
close grained cast iron

NRV Flapper:
high nitrile rubber

Mechanical Seal Faces:
solid silicon carbide

godwin pumps

One Floodgate Road
Bridgeport, NJ 08014
Tel: (609) 467-3636
Fax: (609) 467-4841
BRANCH LOCATIONS:
New England • Buffalo, NY • Chicago, IL
Washington, DC • Richmond, VA

Specifications and illustrations are subject to revision without notice.
© Copyright 1996, Godwin Pumps of America, Inc.
DPC 300/96

godwin pumps of America

31 Clinton Avenue
Norwich, Connecticut 06360
Telephone: (860) 889-2343
Facsimile: (860) 889-0673

July 9, 1999

Roy F. Weston
1 Wall Street
Manchester, NH 03101

Attention: Mr. Tony Delano

Phone: (603)656-5337
Fax: (603)656-5401

RE: Rental Quotation CJH947

Dear Mr. Delano:

Thank you for calling Godwin Pumps of America, Inc. Per your request enclosed please find our quotation for the rental of equipment for the Housatonic River By-pass in Pittsfield, MA. The by-pass required is for approximately 1 ½ miles. We are offering a system with 1,500 feet of discharge lines. This system will need to move approximately 4 times to different locations along the river. Each time the system is moved the set-up time will be approximately 3-5 working days. The staging area for the pumps required will be approximately 100' X 35'.

Each diesel pump will be equipped with a cowl critical silence mufflers to reduce engine noise. Enclosures are available at $3,000 per month. These are full pump enclosures, reducing engine noise to 73 DB at 20 feet.

The system we are offering consists of the use (12) 12" Godwin Dri-Prime® Model DPC300 diesel driven pumps as the primary pumps and (2) 12" Godwin Dri-Prime® Model DPC300 diesel driven pumps as the stand-by units. Ten of the pumps will be connected to murphy-matic controllers which will automatically start/stop the pumps via level controls should the need arise. The pumps will be connected via (2) common manifolds and will discharge through (2) independent 30" discharge lines for approximately 1,500 feet.

Corporate

One Floodgate Road
Bridgeport, NJ 08014
(609)467-3636

Branch Offices:

Richmond, VA (804) 266-3614
Upper Marlboro, MD (301) 390-3806
Charleston, WV (304) 984-0200
Batavia, NY (716) 344-3156
Frankfort, IL (815) 464-5895
Virginia Beach, VA (757) 490-1300
North Charleston, SC (803) 818-2266

Roy F. Weston
Attention: Mr. Tony Delano
Page 2

The Godwin Dri-Prime® pump is an *automatic self priming* pump that will lift up to twenty-eight feet. Our priming system is unique, in that it utilizes compressed air (driven directly off the engine) through a set of venturis. The air is then evacuated to atmosphere, priming the pump. The compressor runs continually, therefore, the pump primes and reprimes quickly. With its oil bath mechanical seal it can run dry for extended periods of time without damage. The Dri-Prime® with its superior materials of construction, i.e. cast chromium impeller, provides longer wear resistance. All of these features make the Dri-Prime® the pump for river bypasses.

In addition to our standard rental Terms and Conditions, the contractor shall be responsible for the following:

- To have adequate lifting equipment on site to load and unload equipment during the setup and breakdown.
- To provide labor to install suction/discharge lines during the setup and breakdown of equipment.
- Freight to and from job site.
- Daily maintenance of all equipment on site.
- Containment area around and under each pump to contain any possible fuel spills during refueling.
- Cleaning of suction screen as necessary.
- To have adequate cribbing material on site.
- Chains or cables with enough capacity to handle the weight of the pumps during the loading and unloading of equipment on site.

If after reviewing this proposal you should have any questions, please contact me at (860) 889-2343.

Sincerely,

GODWIN PUMPS OF AMERICA, INC.

Carroll Hunnewell/mr

Carroll Hunnewell
Northeast Regional Manager

CJH/mr

July 9, 1999
Roy F. Weston
Attention: Mr. Tony Delano
Page 3

**** RENTAL QUOTATION ****
10' to 20' Suction Lift
100 CFS Flow @ 44,800 GPM
4,100 GPM per Pump @ 70 TDH
65 MGD
(2) 30" Discharge Lines for 1,500'

ITEM	QTY	DESCRIPTION	MONTHLY UNIT	MONTHLY TOTAL
A	12	Godwin Dri-Prime® Model DPC300 Automatic Self-Priming (to 28 feet) Diesel Pumpset • 12" Quick Disconnect Suction and Flange Discharge Connection. • Solids handling to 3¼". • Dry Running Oil Lubricated Seal. • Driven by John Deere 6068T, 150 HP, water cooled diesel engine. • Skid mounted with integral 105 or 150 gallon fuel tank and lifting bracket. • Cowl Mufflers • Average fuel consumption 5.8 GPH.	$ 3,285.00	$ 39,420.00
B	2	Godwin Dri Prime® Model DPC300 Automatic Self-Priming (to 28 feet) Diesel Pumpset. • 12" Quick Disconnect Suction and Flange Discharge Connection. • Cowl Muffler • Stand-by Unit	$ 2,463.75	$ 4,927.50

July 9, 1999
Roy F. Weston
Attention: Mr. Tony Delano
Page 4

**** RENTAL QUOTATION ****
10' to 20' Suction Lift
100 CFS Flow @ 44,800 GPM
4,100 GPM per Pump @ 70 TDH
65 MGD
(2) 30" Discharge Lines for 1,500'

ITEM	QTY	DESCRIPTION	MONTHLY UNIT	MONTHLY TOTAL
C	56	12" X 10' Suction Hose with Godwin Quick Disconnect Fittings	$ 315.00	$ 17,640.00
D	14	12" Suction Screen with Godwin Quick Disconnect Fittings	$ N/C	$ N/C
E	10	Murphy-matic Control Panel with 60' float switches.	$ 390.00	$ 3,900.00
F	14	12" 90° Bend, Flanged	$ 90.00	$ 1,260.00
G	14	12" Check Valves, Flanged	$ 180.00	$ 2,520.00
H	400	12" HDPE Discharge Pipe	$ 2.90	$ 1,160.00
I	28	12" HDPE Flange Adapter with Back-up Ring	$ 60.00	$ 1,680.00
J	2	(7) 12" Flange Inlet X (1) 30" Flange Outlet Manifold		
		1st month's rental	$ 6,000.00	$ 12,000.00
		2nd month's rental and thereafter	$ 2,500.00	$ 5,000.00
K	2	30" HDPE 90° Bend	$ 300.00	$ 600.00

July 9, 1999
Roy F. Weston
Attention: Mr. Tony Delano
Page 5

**** RENTAL QUOTATION ****
10' to 20' Suction Lift
100 CFS Flow @ 44,800 GPM
4,100 GPM per Pump @ 70 TDH
65 MGD
(2) 30" Discharge Lines for 1,500'

ITEM	QTY	DESCRIPTION	MONTHLY UNIT	MONTHLY TOTAL
L	2	30" HDPE 45° Bend	$ 250.00	$ 500.00
M	6	30" HDPE Flange Adapter with Back-up Ring	$ 250.00	$ 1,500.00
N	3000	30" HDPE Pipe		
		1st month's rental	$ 6.90	$ 20,700.00
		2nd month's rental and thereafter	$ 4.90	$ 14,700.00
O	4	Adder for Overtime Running @ Standard Rate	$ 3,285.00	$ 13,140.00
P	2	500 Gallon Fuel Tanks with 2 Pump Connection	$ 360.00	$ 720.00
Q	1	Nuts, Bolts, and Gaskets Sets	$ N/C	$ N/C
		1ST MONTH'S RENTAL CHARGE		**$121,667.50**
		2nd MONTH'S RENTAL CHARGE AND THERAFTER		**$108,667.50**

Transportation Charge:
(17) Tractor Trailer Trucks @ $950 each way per load
Total Estimated Transportation Charge: $32,300

July 9, 1999
Roy F. Weston
Attention: Mr. Tony Delano
Page 6

**** FUSION AND LABOR QUOTATION ****

ITEM	DAYS	DESCRIPTION	UNIT	TOTAL
A	1	Travel time to jobsite in Pittsfield, MA (including time and mileage) (one way)	$ 495.00	$ 495.00
B	4	Fusion Technician @ $55/hour (based on an 8 hour day 7:30am - 3:30pm, Monday-Friday)	$ 440.00	$ 1,760.00
C	4	Fusion Machine @ $375/day	$ 375.00	$ 1,500.00
D	4	Service Truck @ $65/day	$ 65.00	$ 260.00
E	5	Per Diem @ $185/day	$ 185.00	$ 925.00
F	1	Travel time to Bridgeport, NJ (Including time and mileage) (one way)	$ 495.00	$ 495.00
		ESTIMATED LABOR CHARGE		**$ 5,435.00**
	10-12	30" HDPE Pipe fused by outside contractor @ $2,400/day		$28,800.00
		TOTAL LABOR CHARGE		**$34,235.00**

godwin pumps of America, Inc.

FAX

One Floodgate Road, Bridgeport, NJ 08014
(609) 467-3636 Fax (609) 467-4841

To: Tony Kessler

From: Tom Paranzino

Company: Roy F. Weston, Inc.

Pages: 10

Fax: 1-610-701-~~7296~~ 7401

Date: January 19, 1999

Re:

CC:

☐ **Urgent** ☐ **For Review** ☐ **Please Comment** ☐ **Please Reply** ☐ **Please Recycle**

Comments:

CONFIDENTIALITY DISCLOSURE STATEMENT

The documents accompanying this facsimile contain information from Godwin Pumps of America, Inc., which is confidential and privileged. The information provided is intended to be for the use of the individual or entity that it is addressed. If you are not the intended recipient, be aware that the review, disclosure, copying or use of the contents of this information is prohibited.

Branch Offices:

Batavia, NY	716-344-3156	Richmond, VA	804-266-3614
Frankfort, IL	815-464-5895	Virginia Beach, VA	757-490-1300
Upper Marlboro, MD	301-390-3006	North Charleston, SC	843-818-2266
Norwich, CT	860-889-2313	Charleston, WV	304-984-0200

godwin pumps of America, Inc.

One Floodgate Road
Bridgeport, New Jersey 08014
Telephone: (609) 467-3636
Facsimile: (609) 467-4841

January 19, 1999

Roy F. Weston, Inc.
One Weston Way
West Chester, PA 19380

Attention: Mr. Tony Kessler

Phone: (610)701-3000
Fax: (610)701-7296

RE: Wellpoint Rental Quotation TP533

Dear Mr. Kessler:

Thank you for calling Godwin Pumps. We are pleased to offer the following proposal for a temporary wellpoint system.

Wellpointing is actually done in two stages requiring different types of pumping equipment. The two stages are: 1) Jetting well points into the ground and 2) wellpoint dewatering. The first stage requires a small high pressure pump called a "jet pump" to provide high pressure water to the wellpoint. The well point is held vertically above the point in the ground where it is to be installed. When the high pressure water jets out the tip of the wellpoint, the ground beneath it is hydraulically undermined and the wellpoint begins to jet itself into the ground. Once the well point has been fully jetted in, the water is turned off and the hose is disconnected from the wellpoint. A few buckets of coarse sand is dropped around each point to act as a filter. The discharge hose of the jet pump is then connected to the next wellpoint and the process is repeated until all wellpoints have been installed.

Stage two starts with connecting all of the wellpoints to the header pipe running parallel to the excavation trench. Once all wellpoints are connected to the header pipes, then the wellpoint pump is connected with hose to the header pipes. Once discharge hose is connected to the outlet of the wellpoint pump, then the system can be started and well point dewatering will begin.

For your particular application, you have a 1,100' trench, which requires dewatering. Your excavation is 12 feet with groundwater at approximately 6 feet. The wellpoint system will be set up in a 400 straight run with points spaced every 6 feet. The wellpoints are 16 feet long which is three to four feet below your excavation. Please confirm water source and discharge distances.

All equipment is in stock and available for delivery. Thank you again for calling Godwin Pumps for your pumping needs and feel free to call with any questions that you may have.

Sincerely,

GODWIN PUMPS OF AMERICA, INC.

Thomas J. Paranzino

Tom Paranzino
Inside Sales

TJP/mtl

cc: Curt Hogancamp, Sales Engineer

January 19, 1999
Roy F. Weston, Inc.
Attention: Mr. Tony Kessler

**** PROPOSAL FOR WELLPOINT SYSTEM ****
400' Run with 60 Points

ITEM	QTY	DESCRIPTION	WEEKLY UNIT	WEEKLY TOTAL	MONTHLY UNIT	MONTHLY TOTAL
A	1	8" Godwin Diesel Driven Model CD200WP Wellpoint Pumpset	$ 795.00	$ 795.00	$ 2,385.00	$ 2,385.00
B	20	6" x 20' Godwin Quick Disconnect Lightweight galvanized header pipe	$ 25.00	$ 500.00	$ 75.00	$ 1,500.00
C	60	16' Overall length Wellpoints (includes point screen, risers, swing arm assemblies)	$ 10.50	$ 630.00	$ 31.50	$ 1,890.00
D	60	2" Wellpoint Connection Caps (for unused Wellpoint)	$ 1.00	$ 60.00	$ 2.00	$ 120.00
E	1	6" Male Godwin Quick Disconnect End Cap	$ 12.00	$ 12.00	$ 36.00	$ 36.00
F	2	6" x 10' Heavy Duty Suction Hose	$ 36.00	$ 72.00	$ 108.00	$ 216.00
G	2	6" x 50' Heavy Duty Discharge Hose	$ 75.00	$ 150.00	$ 185.00	$ 370.00
H	1	500 Gallon Fuel Tank	$ 120.00	$ 120.00	$ 360.00	$ 360.00
		ESTIMATED WELLPOINT EQUIPMENT		**$ 2,339.00**		**$ 6,877.00**

Estimated Transportation: $250.00 each way, per load. One Godwin truck and pipe trailer required. Total for delivery and pickup $500.00.

**** RENTAL QUOTATION FOR JETTING EQUIPMENT ****

ITEM	QTY	DESCRIPTION	UNIT DAILY	TOTAL DAILY	UNIT WEEKLY	TOTAL WEEKLY
A	1	Godwin Dri-Prime® Model HL80 Diesel Driven Jet Pump	$ 170.00	$ 170.00	$ 510.00	$ 510.00
B	2	4" x 20' Heavy Duty Rubber Suction Hose	$ 13.00	$ 26.00	$ 39.00	$ 78.00
C	2	2" x 50' Heavy Duty Pressure Jetting Hose	$ 13.00	$ 26.00	$ 39.00	$ 78.00
D	1	2" Godwin Quick Disconnect Jetting Bend	$ 5.00	$ 5.00	$ 15.00	$ 15.00
E	1	2" Godwin Quick Disconnect Gate Valve	$ 9.00	$ 9.00	$ 27.00	$ 27.00
		ESTIMATED JETTING EQUIPMENT RENTAL		**$ 236.00**		**$ 708.00**

Estimated Transportation: $125.00 for pickup of equipment. Jetting equipment will be delivered with wellpoint pump.

CD200WP – Wellpoint Pump

Features:

- Close mounted arrangement carrying pump and vacuum separation tank mounted to a diesel engine or electric motor.
- All metal construction *solids handling* pump end.
- Extensive application flexibility - will handle raw sewage, slurries and liquids with solids up to 3 " in diameter.
- Dry running, oil bath, mechanical seal with high abrasion resistant silicon carbide interfaces. Able to run dry for long periods of time without damage.
- Solids handling ball type non-return valve with renewable flexible rubber seat and quick release access feature.

200 scfm air handling insures dewatering of up to 1,000 ft systems. Larger units available on request.

Compact unit mounted on a skid base or highway trailer both incorporating integral overnight running fuel tank.

Very simple maintenance - normally confined to checking engine and seal cavity oil levels.

Available with a variety of engines including Deutz and John Deere.

Silenced and unsilenced versions can be supplied.

godwin pumps

SKYLINE STEEL - ESTIMATED SHEETPILE COSTS ($/ton)						
SECTION	AZ-26	AZ-36	AZ-48	AZ-26	AZ-36	AZ-48
STEEL GRADE (psi)	no plates			with 25' long cover plates on each flange		
50,000	$730.00	$750.00	$780.00			
55,000	$762.00	$785.00	$815.00			
60,000	$782.00	$805.00	$825.00			

NOTES:

Plates to be as large as possible for the section.

Assume sheets will be 60 feet long.

Costs per Rory Kelley (703-978-2500) on 9/3/99.

UNIT ANALYTICAL COSTS

BORATORY SERVICES
GENERAL ELECTRIC (GE)/ HOUSATONIC RIVER PROJECT

	7DAY		14 DAY		21 DAY	
	MATRIX		MATRIX		MATRIX	
ANALYSIS	SOIL/SEDIMENT	WATER	SOIL/SEDIMENT	WATER	SOIL/SEDIMENT	WATER
Appendix IX + 3						
PCB (with drying step)	132.50		105		95	
PCB (no drying step)	112.50	112.50	85	85	75	75
PCB (low level water)		112.50		85		75
App. IX VOA	260	165	220	140	175 (5035)	110
App. IX BNA	300	300	250	250	200	200
Organochlorine Pesticides	150	150	125	125	99	99
Organophosphorus Pesticides	190	190	160	160	126	126
Herbicides	190	190	160	160	126	126
Dioxin/Furans (8290)	—	—	—	—	—	—
Cyanide, Total	30	30	25	25	20	20
Sulfide, Total	30	30	25	25	20	20
Appendix IX Metals (full list)	120	120	100	100	80	80
Antimony	10	10	8	8	6	6
Arsenic	↓	↓	↓	↓	↓	↓
Barium						
Beryllium						
mium						
Chromium						
Cobalt						
Copper						
Lead						
Mercury	30	30	25	25	20	20
Nickel	10	10	8	8	6	6
Selenium						
Silver						
Thallium						
Tin						
Vanadium						
Zinc						
Metals Prep	15	15	13	13	10	10

UNIT ANALYTICAL COSTS

3ORATORY SERVICES
GENERAL ELECTRIC (GE)/ HOUSATONIC RIVER PROJECT

	7day Soil	7day Water	14DAY Soil	14DAY Water	21 DAY Soil	21 DAY Water
Conventionals						
TSS	—	25	—	18	—	15
TDS	—	25	—	18	—	15
BOD5	—	30	—	25	—	20
DOC	—	30	—	25	—	20
Hardness	—	15	—	12	—	10
Orthophosphate	—	30	—	25	—	20
TKN	—	30	—	25	—	20
NH3	—	30	—	25	—	20
NO3	—	30	—	25	—	20
NO2	—	30	—	25	—	20
Total Phosphate	—	30	—	25	—	20
Alkaliniity	—	15	—	12	—	10
Turbidity	—	15	—	12	—	10
Dissolved Oxygen	—	15	—	12	—	10
PH	—	15	—	10	—	5
TOC	65	30	55	25	45	20
Geotechnical						
Atterberg Limits	80		65		50	
Bulk Density	45		35		25	
Porosity	50		40		30	
n Size (sieve & hydrometer)	110		90		70	

ANALYSIS	7 DAY	14 DAY	21 DAY
Tissue Analysis			
PCBs	145	120	95
% Lipids	10	10	10
BNA (CSIM PAH)	750	650	500
Dioxin/Furans	—	—	—
Appendix IX Metals	150	130	100
Cyanide	55	45	35
Waste Disposal			
TCLP	1095	920	730
PH	15	10	5
Reactivity (S & CN)	100	80	65
Ignitability (flashpoint)	115	95	75

EXTENDED ANALYTICAL COSTS

LABORATORY SERVICES
GENERAL ELECTRIC (GE)/ HOUSATONIC RIVER PROJECT

ANALYSIS	TURN AROUND TIME	UNIT COST	ESTIMATED SAMPLES TO BE COLLECTED *	ESTIMATED CAPACITY**	EXTENDED COSTS
Soils/Sediments					
PCB(with drying step)	7 day TAT	132.50	70	70	9,275
PCB	7 day TAT	112.50	650	650	73,125
% Solids	21 day TAT	NC	710	710	-0-
App. IX BNA	21 day TAT	200	710	710	142,000
Organochlorine Pesticides	21 day TAT	99	142	142	14,058
Organophosphorus Pesticides	21 day TAT	126	142	142	17,892
Herbicides	21 day TAT	126	710	710	89,460
Appenix IX Metals	21 day TAT	80	710	710	56,800
Cyanide, Total	21 day TAT	20	710	710	14,200
Sulfide, Total	21 day TAT	20	710	710	14,200
Total					431,010

* based on proposed field sampling schedule May-September, 1999

**estimate of available capacity in laboratory for this project. Laboratories may bid on all or a portion of the estimated samples to be collected. Laboratories are not required to bid on all analyses to be considered for this work.

EXTENDED ANALYTICAL COSTS

LABORATORY SERVICES
GENERAL ELECTRIC (GE)/ HOUSATONIC RIVER PROJECT

ANALYSIS	TURN AROUND TIME	UNIT COST	ESTIMATED SAMPLES TO BE COLLECTED *	ESTIMATED CAPACITY**	EXTENDED COSTS
Specialty Analysis					
Dioxin/Furans (8290) (Soils/Sediments)	21 day TAT	—	710	—	—
Dioxin/Furans (8290) (Water)	21 day TAT	—	90	—	—
Grain Size (sieve & hydrometer)	21 day TAT	70	3607	70/week	Variable
DOC(Water)	21 day TAT	20	270	270	5,400
TOC(water)	21 day TAT	20	270	270	5,400
TOC(soil)	21 day TAT	45	3607	100/week	Variable
Total					10,800

* based on proposed field sampling schedule May-September, 1999

**estimate of available capacity in laboratory for this project. Laboratories may bid on all or a portion of the estimated samples to be collected. Laboratories are not required to bid on all analyses to be considered for this work.

EXTENDED ANALYTICAL COSTS

LABORATORY SERVICES
GENERAL ELECTRIC (GE)/ HOUSATONIC RIVER PROJECT

ANALYSIS	TURN AROUND TIME	UNIT COST	ESTIMATED SAMPLES TO BE COLLECTED *	ESTIMATED CAPACITY**	EXTENDED COSTS
Surface Water					
TSS	21 day TAT	15	90	90	1,350
TDS	21 day TAT	15	90		1,350
BOD5	21 day TAT	20	90		1,800
Chlorophyll	21 day TAT	60	90		5,400
Hardness	21 day TAT	15	90		900
Orthophosphate	21 day TAT	20	90		1,800
TKN	21 day TAT	20	90		1,800
NH3	21 day TAT	20	90		1,800
NO3	21 day TAT	20	90		1,800
NO2	21 day TAT	20	90		1,800
Total Phosphate	21 day TAT	20	90		1,800
Alkalinity	21 day TAT	10	90		900
Turbidity	21 day TAT	10	90		900
Dissolved Oxygen	21 day TAT	10	90		900
pH	21 day TAT	5	90		450
B (low level) Total	21 day TAT	75	90		6,750
PCB (low level) Dissolved	21 day TAT	75	90		6,750
App. IX BNA	21 day TAT	200	90		18,000
Organochlorine Pesticides	21 day TAT	99	90		8,910
Organophosphorus Pesticides	21 day TAT	126	90		11,340
Herbicides	21 day TAT	126	90		11,340
Appenix IX Metals (Total & Dissolved)	21 day TAT	80	180	180	14,400
Cyanide, Total	21 day TAT	20	90	90	1,800
Sulfide, Total	21 day TAT	20	90	90	1,800
Total					105,840

* based on proposed field sampling schedule May-September, 1999

**estimate of available capacity in laboratory for this project. Laboratories may bid on all or a portion of the estimated samples to be collected. Laboratories are not required to bid on all analyses to be considered for this work.

EXTENDED ANALYTICAL COSTS

LABORATORY SERVICES
GENERAL ELECTRIC (GE)/ HOUSATONIC RIVER PROJECT

ANALYSIS	TURN AROUND TIME	UNIT COST	ESTIMATED SAMPLES TO BE COLLECTED *	ESTIMATED CAPACITY**	EXTENDED COSTS
Stormwater					
TSS	21 day TAT	15	180		2,700
TDS	21 day TAT	15	180		2,700
BOD5	21 day TAT	20	180		3,600
COD (Chemical Oxygen Demand)	21 day TAT	20	180		3,600
Hardness	21 day TAT	10	180		1,800
Orthophosphorus	21 day TAT	20	180		3,600
Chlorophyll * Subcontracted	21 day TAT	60	180		10,800
TKN	21 day TAT	20	180		3,600
NH3	21 day TAT	20	180		3,600
NO3	21 day TAT	20	180		3,600
NO2	21 day TAT	20	180		3,600
Total Phosphate	21 day TAT	20	180		3,600
Alkalinity	21 day TAT	10	180		1,800
Turbidity	21 day TAT	10	180		1,800
Dissolved Oxygen	21 day TAT	10	180		1,800
F ilate Organic Carbon	21 day TAT	40	180		7,200
P..	21 day TAT	5	180		900
PCBs (low level) Total	21 day TAT	75	100		7,500
PCBs (low level) Dissolved	21 day TAT	75	100		7,500
Total					78,900

* based on proposed field sampling schedule May-September, 1999

**estimate of available capacity in laboratory for this project. Laboratories may bid on all or a portion of the estimated samples to be collected. Laboratories are not required to bid on all analyses to be considered for this work.

TOTAL BID PRICE $626,550

FIRM NAME

AUTHORIZED SIGNATURE

NAME(PRINT OR TYPE)

WASTE TECHNOLOGY SERVICES INC.

FAX TRANSMITTAL SHEET

Telephone....(716) 282-4100
Fax....(716) 282-6986

To: Tony Kessler
Roy F. Weston

From: Mike Oliver

Comments: Tony – Budgetary Cost Estimates for Kokomo
Please call with any Questions.
Thank you
Mike O.

Date: 3/11/98 **Total Pages:** 5
Receiving Fax No: 847-918-4055 Fax

FAX FACTS from Waste Technology Services, Inc.

- Governor Pataki of New York announced a plan that will give public utilities and independent power producers the freedom to decide how to divide the state's summer allotment of nitrogen oxide (NOx) emissions from 1999 to 2002.
- More than a year after a federal appeals court vacated the listing of 28 carbamate wastes as hazardous, the EPA has yet to change its listing policy, even as two more listing rules are imminent. These rules would add materials include several petroleum refining wastes and organobromine wastes.
- The White House Office of Management and Budget began reviewing a final rule to set stringent new waste management standards on mineral processors to protect against contamination when wastes are disposed on land.

Corporate Office: 640 Park Place, Niagara Falls, New York 14301 Telephone 716-282-4100 • Fax 716-282-6986

6 Forest Park Drive • Farmington, CT 06032 • Telephone (860) 677-1146 • Fax (860) 677-4979
6425 Somerton Place • Richmond, VA 23150 • Telephone (804) 737-0008 • Fax (804) 737-0167

ROY F. WESTON / IDEM

CONTINENTAL STEEL SUPERFUND SITE

ITEM	***WASTE DESCRIPTION***	***EPA CODE***	***ESTIMATED QUANTITY***	***DISPOSAL METHOD***	***ESTIMATED BUDGETARY DISPOSAL COSTS***	***COMMENTS***
A	RCRA Metals Contaminated Solids	D004-D011	<1,000 tons	Metals Stabilization/ Landfill	$80-$90/ton $110/yd3 $75/drum	Non-Asbestos Sample Required
B	PCB Contaminated Solid	PCB	<500 tons	TSCA Landfill	$165-$175/ton $175-$185/yd3 * $115/drum	Non-Asbestos Sample Required No transformer carcasses
C	PCB/RCRA Metals Contaminated Solids	D004-D011/ PCB	<1,000 tons	Metals Stabilization/ TSCA Landfill	$265/ton $265/yd3 $150/drum	Non-Asbestos Sample Required No transformer carcasses
D	Liquid Hazardous Aqueous/RCRA Metals Only or Light Acids and Caustics	D004-D011	<25,000 gallons	Treatment and/or Stabilization	$.85-$1.10/gallon $110-$135/drum	Non-PCB
E	Liquid Hazardous Aqueous w/ PCB (Decon Waters/Rinses)	PCB	<25,000 gallons	TSCA Treatment	$.75-$1/25/gallon (4,000 gallon/tkld. minimum) $300/drum	<5 ppm PCB <1,000 ppm TOC No Layering

* PCB Wood Flooring Density <2,000 pounds/yd3

ITEM	WASTE DESCRIPTION	EPA CODE	ESTIMATED QUANTITY	DISPOSAL METHOD	ESTIMATED BUDGETARY DISPOSAL COSTS	COMMENTS
F	Liquid Hazardous Oil w/ PCB >50	PCB	<25,000 gallons	TSCA Incineration/Recycle	$250/drum	Transformer Fluid <500 ppm PCB <2% TSS <10% Water
G	Liquid Hazardous Solvents/Oil No PCB	D001 F001-F005	<25,000 gallons	Fuel Blending/ Incineration	$.60-$.85/gallon $95/drum	<5% Chlorine <10% Water <5% TSS
H	Non-Hazardous Solid Waste	N/H	<150 tons	Subtitle D Landfill	$40-$45/ton $45-50/yd3 $40-60/drum	Analysis Required (TCLP, I, C, R, PCB)
I	Non-Hazardous Liquid Waste	N/H	<20,000 gallons	Treatment	$.45-$.75/gallon $50-$60/drum	Analysis Required (TCLP, I, C, R, PCB)
J	PCB Transformers	PCB	10-15 carcasses	Recycle	$.15-$.25/pound Empty Carcass	<500 ppm PCB ($150/unit minimum)
K	PCB Large Capacitors	PCB	TBD	Recycle/Incineration	$1.85-$1.95/pound	
L	PCB Light Ballasts	Non-Regulated	TBD	Recycle/Incineration	$1.15/pound	assume 1# each
M	Non-PCB Light Ballasts	Non-Regulated	TBD	Recycle/Landfill	$1.15/pound gross weight of drum $95/drum	
N	EAF Dust	K061	150-200 yd3	Treatment/C-Landfill	$125/ton or yd3	1 yd3 = 1 ton

CONTINENTAL STEEL SUPERFUND

TRANSPORTATION SCHEDULE

ITEM	WASTE PACKAGING	VEHICLE TYPE	ESTIMATED TRANSPORTATION COST
A & B	Bulk (tons) Cubic Yard Bags Drums	Dumptrailer-- Dumptrailer Box Van	$40/ton * $40/ton * $1,050/tkld.
C	Bulk (tons) Cubic Yard Bags Drums	Dumptrailer Dumptrailer Box Van	$85/ton * $85/ton * $1,950/tkld.
D	Bulk (gallons) Drums	Vac/Tank Trailer Box Van	$975/tkld. $950/tkld.
E	Bulk Drums	Vac/Tank Trailer Box Van	$1,950/tkld. $1,950/tkld.
F	Drums	Box Van	$1,245/tkld.
G	Bulk (gallons) Drums	Vac/Tank Trailer Box Van	$1,050/tkld. $1,050/tkld.
H	Bulk Cubic Yard Bags Drums	Dumptrailer Dumptrailer Box Van	$375/tkld. $375/tkld. $1,025/tkld.
I	Bulk Drums	Vac/Tank Trailer Box Van	$1,050/tkld. $1,050/tkld.
J	Carcasses	Flatbed	$1,245/tkld.
K & L	Boxes/Pallets/Drums	Box Van	$1,245/tkld.
M	Drums - Recycle Drums - Landfill	Box Van Box Van	$1,245/tkld. $1,050/tkld.

Note: Box Van/Dumptrailers/Tank Wagons allow for 1½ hours loading with a charge of $65/hour thereafter.

Vacuum Trailers are charged at $75/hour while on-site.

* All Dumptrailer rates are based on a minimum of 22 tons/truckload.

GE PITTSVILLE

Production Rate (TPH) 10

PROPOSAL SUMMARY - LT3-HT - 175,000 TONS

05-Aug-99
10:05 AM

PAY ITEM	TSD HO LABOR	Weston Site LABOR	LOCAL LABOR	OTHER RFW LABOR	EXTERNAL EXPENSES	INTERNAL EXPENSES	NEW EQUIP	MAJOR MAINT	TOTAL	AS BID PAY ITEM TOTAL
PRE-MOBILIZATION	$46,470	$0	$0	$2,850	$17,200	$23,600	$0.00	$0.00	$90,120.00	$200,478
MOBILIZATION	$10,753	$34,939	$62,491	$0	$740,570	$0	$0	$22,736	$871,489	$1,149,572
START-UP CLEAN SOILS	$11,122	$10,790	$51,280	$5,000	$148,058	$0	$0	$8,120	$234,370	$366,438
TEST BURN - incl in strrtup										
OPERATIONS	$607,172	$815,526	$4,507,945	$0	$14,393,614	$0	$0	$654,085	$20,978,342	$31,000,087
DEMOBILIZATION	$7,996	$14,653	$26,853	$0	$49,370	$0	$0	$9,473	$108,346	$180,828
TOTAL, RAW COSTS	$683,512	$875,908	$4,648,570	$7,850	$15,348,812	$23,600	$0	$694,415	$22,282,667	$32,897,403
OVERHEAD RATE	160.00%	75.00%	75.00%	160.00%	0.00%	0.00%	0.00%	0.00%		
OVERHEAD AMOUNT	$1,093,620	$656,931	$3,486,427	$12,560	$0	$0	$0	$0	$5,249,538	
SUBTOTAL	$1,777,132	$1,532,839	$8,134,997	$20,410	$15,348,812	$23,600	$0	$694,415	$27,532,205	
CONTINGENCY - WESTON 10.00%	$177,713	$153,284	$813,500	$2,041	$1,534,881	$2,360	$0	$0	$2,683,779 $0	
FEE - WESTON 10.00%	$177,713	$153,284	$813,500	$2,041	$1,534,881	$0	$0	$0	$2,681,419 $0	
TOTAL, PROJECT	***$2,132,558***	***$1,839,407***	***$9,761,997***	***$24,492***	***$18,418,574***	***$25,960***	***$0***	***$694,415***	***$32,897,403***	***$32,897,403***

Operations Cost/ US TON = $ 139.81
Operations Cost/ yard $ 209.71
Overall Cost/Ton US TON = $148.36
Overall Cost/Yard $222.54
221,738 US TONS
147,825 cubic yards

INFORMATION FOR PROFITABILITY ANALYSIS

RAW WESTON LABOR =	$6,215,840	2.02900	
INTERNAL ODC'S =	$23,600	$1,146,538	
EXTERNAL ODC'S =	$15,348,812	$13,758,454	
DEPRECIATION =	$0		
MAJOR MAINT =	$601,225		
OVERHEAD =	$5,249,538		
G+A ON DEP/MAINT=	$93,190		2.50
G+A ON LABOR =	$0.00		2.92
CONTINGENCY =	$2,683,779		2.94
FEE =	$2,681,419		
BOND =	$0.00		
TOTAL	$32,897,403	$32,897,403	

GE PITTSVILLE

Production Rate (TPH) 10

PROPOSAL SUMMARY - LT3-HT - 175,000 TONS

05-Aug-99
10:05 AM

PAY ITEM	TSD HO LABOR	Weston Site LABOR	LOCAL LABOR	OTHER RFW LABOR	EXTERNAL EXPENSES	INTERNAL EXPENSES	NEW EQUIP	MAJOR MAINT	TOTAL	AS BID PAY ITEM TOTAL
PRE-MOBILIZATION	$46,470	$0	$0	$2,850	$17,200	$23,600	$0.00	$0.00	$90,120.00	$200,478
MOBILIZATION	$10,753	$34,939	$62,491	$0	$740,570	$0	$0	$22,736	$871,489	$1,149,572
START-UP CLEAN SOILS	$11,122	$10,790	$51,280	$5,000	$148,058	$0	$0	$8,120	$234,370	$366,438
TEST BURN - incl in strrtup										
OPERATIONS	$607,172	$815,526	$4,507,945	$0	$14,393,614	$0	$0	$654,085	$20,978,342	$31,000,087
DEMOBILIZATION	$7,996	$14,653	$26,853	$0	$49,370	$0	$0	$9,473	$108,346	$180,828
TOTAL, RAW COSTS	$683,512	$875,908	$4,648,570	$7,850	$15,348,812	$23,600	$0	$694,415	$22,282,667	$32,897,403
OVERHEAD RATE	160.00%	75.00%	75.00%	160.00%	0.00%	0.00%	0.00%	0.00%		
OVERHEAD AMOUNT	$1,093,620	$656,931	$3,486,427	$12,560	$0	$0	$0	$0	$5,249,538	
SUBTOTAL	$1,777,132	$1,532,839	$8,134,997	$20,410	$15,348,812	$23,600	$0	$694,415	$27,532,205	
CONTINGENCY - WESTON 10.00%	$177,713	$153,284	$813,500	$2,041	$1,534,881	$2,360	$0	$0	$2,683,779	
									$0	
FEE - WESTON 10.00%	$177,713	$153,284	$813,500	$2,041	$1,534,881	$0	$0	$0	$2,681,419	
									$0	
TOTAL, PROJECT	*$2,132,558*	*$1,839,407*	*$9,761,997*	*$24,492*	*$18,418,574*	*$25,960*	*$0*	*$694,415*	*$32,897,403*	*$32,897,403*

Operations Cost/ US TON =	$	139.81
Operations Cost/ yard	$	209.71
Overall Cost/Ton US TON =		$148.36
Overall Cost/Yard		$222.54
221,738	US TONS	
147,825	cubic yards	

INFORMATION FOR PROFITABILITY ANALYSIS

RAW WESTON LABOR =	$6,215,840	2.02900	
INTERNAL ODC'S =	$23,600	$1,146,538	
EXTERNAL ODC'S =	$15,348,812	$13,758,454	
DEPRECIATION =	$0		
MAJOR MAINT =	$601,225		
OVERHEAD =	$5,249,538		
G+A ON DEP/MAINT=	$93,190		2.50
G+A ON LABOR =	$0.00		2.92
CONTINGENCY =	$2,683,779		2.94
FEE =	$2,681,419		
BOND =	$0.00		
TOTAL	$32,897,403	$32,897,403	

FE-COPPER
PREMOBILIZATION OF LT3-HT

05-Aug

PREMOBILIZATION

WEEKS	6	

ITEM	RATE	Total hours Per Week	PERIOD TOTAL
TSD HOME OFFICE SUPPORT			
PROJECT DIRECTOR	$52.00	10	$3,120
TSD PROJECT MANAGER -	$31.00	40	$7,440
SENIOR PROJECT ENGINEE	$31.00	0	$0
SAFETY & QA OFFICER	$38.00	0	$0
PROJ ANALYST	$15.00	20	$1,800
COST/SCHEDULE ENGINEER	$22.00	16	$2,112
CONTRACTS ADMIN	$32.00	4	$768
PROCUREMENT	$22.00	8	$1,056
OFFICE SUPPORT	$13.00	8	$624
	TOTAL HOME OFFICE		**$16,920**

ITEM	RATE	TOTAL HOURS	TOTAL	
OTHER RFW COSTS				
DESIGN ENGINEER (PLANS)	$25.00	30	$750	
DESIGN ENGINEER (GEOTE	$35.00	60	$2,100	
	TOTAL OTHER RFW		**$2,850**	
PLANS (O&M; H&S; WP; PTP)				
TSD PROJECT MANAGER -	$31.00	0	$0	INCLUDED ABOVE
SENIOR PROJECT ENGINEE	$31.00	400	$12,400	
SAFETY & QA OFFICER	$38.00	200	$7,600	
QA PLANS	$38.00	200	$7,600	
OFFICE SUPPORT	$13.00	150	$1,950	
TOTAL WAGES FOR PLANS			**$29,550**	
EXTERNAL COST				
SITE INVESTIGATION - GEOTECH			$10,000	
TRAVEL TO SITE FOR PLAN	4	$500	$2,000	
OTHER TRIPS	4	$500	$2,000	
MAIL, TEC..	16	$200	$3,200	
MEDICAL EXAMS	0	$500	$0	
TOTAL EXTERNAL COSTS			**$17,200**	
INTERANL COSTS				
PUBLICATIONS	1	$22,000	$22,000	
MISC INTERNALS	16	$100	$1,600	
TOTAL INTERNALS COSTS			**$23,600**	

FE COPPER
PREMOBILIZATION OF LT3-HT

05-Aug

FE-COPPER
PREMOBILIZATION OF LT3-HT

05-Aug

WEEKS 16

	OVH'D	CONT	FEE
H.O. LABOR	160.00%	10.00%	10.00%
SITE LABOR	75.00%	10.00%	10.00%
CRAFT LABOR	75.00%	10.00%	10.00%
OTHER RFW LABOR	160.00%	10.00%	10.00%
EXT ODC'S	0.00%	10.00%	10.00%
INT ODC'S	0.00%	10.00%	0.00%

	G+A	COST/DAY	TOTAL	COST/MO
DEPRECIATION	16.00%	$0	$0	$0
MAJOR MAINTENANCE	16.00%	$0	$0	$0
ESCALATION	3.00%	0	1.00	

PREMOBILIZATION 6 WEEKS

MOBILIZATION OF TIS-5 ONLY

	TSD LABOR	SITE LABOR	LOCAL LABOR	OTHER RFW LABOR	EXT	INTERNALS	TOTAL
PREMOBILIZATION	$46,470	$0	$0	$2,850	$17,200	$23,600	$90,120
ESCALATION	$0	$0	$0	$0	$0	$0	$0
TOTAL	$46,470	$0	$0	$2,850	$17,200	$23,600	$90,120
OVERHEADS	$74,352	$0	$0	$4,560	$0	$0	$78,912
	$0	$0	$0	$0	$0	$0	$0
CONTING	$12,082	$0	$0	$741	$1,720	$2,360	$16,903
PROFIT	$12,082	$0	$0	$741	$1,720	$0	$14,543
DEPRECIATION					$0	$0	$0
USE TAX					$0		$0
MAJOR MAINT					$0	$0	$0
TOTAL	$144,986	$0	$0	$8,892	$20,640	$25,960	$200,478

FE COOPER
MOBILIZATION OF LT3-HT

05-Aug

MOBILIZATION
PERIOD = 28 DAYS (WORK DAYS 4 WEEKS

ITEM	RATE	DAILY HOURS	PERIOD TOTAL	
PERSONNEL -FIELD				
SITE MGT STAFF				
SITE MANAGER	$32.00	9	$15,411	WESTON on site 4 weeks early
H+S OFFICER	$20.33	9	$4,895	
MAINT SUPER	$21.33	9	$5,375	WESTON
SITE ENGR	$23.00	8	$4,830	WESTON
OFFICE MGR	$15.00	8	$3,150	WESTON
CLERK	$8.00	6	$1,277	WESTON
FIELD LABOR		*TOTAL HRS*		
CREWS				
LEAD MECHANIC	$20.33	24	$13,662	WESTON
LEAD E/I TECH	$20.33	12	$6,831	WESTON
E/I TECH	$20.33	12	$6,831	WESTON
EQUIP OPERATORS	$20.33	26	$14,686	LOCAL
TECHNICIAN	$20.33	26	$14,800	WESTON
ADDL CRFT - 10%			$5,681.02	LOCAL ALLOWANCE
				$97,430 TOTAL LABOR
	TOTAL, CRAFT		$62,491	
	TOTAL, MANAGEMENT		$34,939	WESTON SUPLLIED 97429.79
TSD HOME OFFICE SUPPORT	*TOTAL HRS PER WEEK -*		*3 WEEKS*	
PROJECT DIRECTOR	$52.00	5	$780	
TSD PROJECT MANAGER -T	$31.00	40	$4,960	
SENIOR PROJECT ENGINEER	$31.00	30	$2,790	
SAFETY & QA OFFICER	$38.00	5	$570	
PROJ ANALYST	$15.00	5	$225	
COST/SCHEDULE ENGINEER	$22.00	4	$264	
CONTRACTS ADMIN	$32.00	2	$192	
PROCUREMENT	$22.00	10	$660	
OFFICE SUPPORT	$13.00	8	$312	
	TOTAL, HOME OFFICE		$10,753	
OTHER RFW COSTS				
Air Team	$25.00	0	$0	
DESIGN - GEOTECH	$30.00	0	$0	
TOTAL, OTHER RFW			$0	

FE COOPER
MOBILIZATION OF LT3-HT

05-Aug

EXTERNAL COSTS MOBILIZATION COSTS		RATE				US TOTAL		
SUBCONTRACTORS								
MOVE UNIT TO SITE		1 LS			PLUG	$40,000		
MECHANICAL SUBCONTRACTORS		1 LS				$10,000		
ELECTRICAL SUBCONTRACTORS		1 LS				$10,000		
KILN MOBILIZATION		1 LS				$500,000		
D2424 Purchase		1 LS				$0		
DESLAGGER MOB - FROM TIS-20		1 LS				$15,000		
UTILITIES								
POWER TIE IN						$10,000		
TELEPHONE SET UP						$5,000		
WATER TIE INS						$10,000		
RELOCATION/TRAVEL								
MGMT RELOCATIONS	4	PEOPLE @	$3,500	PER EACH		$14,000		
CRAFT RELOCATIONS	12	PEOPLE @	$3,500	PER EACH		$42,000		
LIVING EXPENSES	3	PERSON @	$40.00	PER DAY		$4,200		
Trip Home	3	PERSON @	$30.00	PER DAY		$2,730		
HOME OFFICE TRAVEL	7	WEEKS	$800	per week		$5,600		
CARS AT SITE	2	EACH@	40	per day		$2,520		
TRIPS HOME - INCLUDED IN OPS						-		
OTHER EXPENSES	$/DAY	(PER WORK DAY)						
MAINT EXPENSES	$700.00					$27,440		
MISC EXP	$250.00					$9,800		
ALL TRAILERS	$36	PER DAY	3 trailers include client			$3,000		1000
JANITORIAL SERVICE	$30	PER DAY				$2,100		
MOVE EQUIP TO SITE	$5,000	MOB/DEMO CHARGES FOR MISC EQUIPMENT				$5,000		
SAFETY EQUIPMENT	$100	PER DAY				$2,800		
MISC EQUIPMENT	$300.00	RENTED MANLIFT,FORLIFTS, ETC... DUIRNG MOB				$8,400		
Perf Test Analytics						$10,000	Quess	
JOB TRUCK	$35.00	PER DAY				$980		
TOTAL, ODC'S MOBILIZATION						$ 740,570		

FE COOPER
MOBILIZATION OF LT3-HT

05-Aug

	OVH'D	CONT	FEE	
H.O. LABOR	160.00%	10.00%	10.00%	
SITE LABOR	75.00%	10.00%	10.00%	
CRAFT LABOR	75.00%	10.00%	10.00%	
OTHER RFW LABOR	160.00%	10.00%	10.00%	
EXT ODC'S	0.00%	10.00%	10.00%	$0
INT ODC'S	0.00%	10.00%	0.00%	

	G+A	COST/DAY	TOTAL	COST/MO
DEPRECIATION	16.00%	$0	$0	$0
MAJOR MAINTENANCE	16.00%	$500	$580	$15,000
ESCALATION	3.00%	0	1.00	
			0	

MOBILIZATION OF LT3-HT ONLY

	TSD LABOR	SITE LABOR	CRAFT LABOR	OTHER RFW LABOR	EXT	INTERNALS	TOTAL
MOBILIZATION	$10,753	$34,939	$62,491	$0	$740,570	$0	$848,753
ESCALATION	$0	$0	$0	$0	$0	$0	$0
TOTAL	$10,753	$34,939	$62,491	$0	$740,570	$0	$848,753
OVERHEADS	$17,205	$26,204	$46,868	$0	$0	$0	$90,277
MEXICAN WAGE ADJUSTM	$0	$0	$0	$0	$0	$0	$0
CONTING	$2,796	$6,114	$10,936	$0	$74,057	$0	$93,903
PROFIT	$2,796	$6,114	$10,936	$0	$74,057	$0	$93,903
USE TAX					$0		$0
MAJOR MAINT					$22,736	$0	$22,736
TOTAL	$33,549	$73,371	$131,231	$0	$911,420	$0	$1,149,572

FE COOPER AS OF: 05-Aug-99
STARTUP ON CLEAN SOILS - DAILY COST 10:05 AM
LT3-HT

FIELD LABOR	RATE $/HR	HRS WORK/ DAY	TOTAL RAW LABOR	BASIS	
MANAGEMENT STAFF					
SITE MANAGER	$32.00	7.5	$240	WESTON	
SSHO	$20.33	8.6	$175	WESTON	
SITE ENGR	$23.00	8.6	$198	WESTON	
OFFICE MGR	$15.00	7.5	$113	WESTON	
SITE CLERK	$8.00	5.7	$46	WESTON	
TIS-5 OPERATIONS - 3 SHIFTS - 7 DAYS/WK					
CONTROL ROOM OPERATOR	$21.33	24.0	$512	WESTON	
LOADER OPER - FEED	$20.33	24.0	$488	WESTON	
TECHNICIAN	$20.33	24.0	$488	WESTON	
TECHNICIAN - ELEC	$20.33	24.0	$488	WESTON	
LOADER OPER- ASH	$20.33	0.0	$0	PDELETED PER MGC ADD BELT	
60 HR/WK STAFF - MAINT.					
MAINT SUPV	$21.33	12.0	$256	WESTON	
LEAD MECHANIC	$20.33	12.0	$244	WESTON	
LEAD MECHANIC	$20.33	12.0	$244	WESTON	
LEAD E/I TECHNICIAN	$20.33	0.0	$0	WESTON	Per MGC -
LEAD E/I TECHNICIAN	$20.33	0.0	$0	WESTON	Per MGC -
MATERIAL PREP (60HR/WK)					
FEED PREP SUPV	$20.33	12.0	$244	WESTON	
FEED PREP OPERATOR	$20.33	17.2	$350	WESTON	
FEED PREP OPERATOR	$20.33	17.2	$350	WESTON	

SUBTOTA	$4,434
SUBTOTAL FIELD LABOR-LOCAL	$3,663
SUBTOTAL FIELD LABOR-WESTON	$771

WESTON OFFICE LABOR	RATE $/HR	*HOURS/ WEEK*	*HOURS/ DAY*	*TOTAL AW LABOR*
PROJECT DIRECTOR	$52.00	10	2	$104
TSD PROJECT MANAGER -THERMAL	$31.00	60	12	$372
SENIOR PROJECT ENGINEER	$31.00	16	3	$99
SAFETY & QA OFFICER	$38.00	8	2	$61
PROJ ANALYST	$15.00	12	2	$36
COST/SCHEDULE ENGINEER	$32.00	12	2	$77
CONTRACTS ADMIN	$32.00	1	0	$0
PROCUREMENT	$22.00	8	2	$35
OFFICE SUPPORT	$13.00	4	1	$10
SUBTOTAL OFFICE LABOR				$794

OTHER RFW OFFICE LABOR	*RATE* $/HR	*HOURS/* WEEK	*HOURS/* DAY	*TOTAL* RAW LABOR
Air Team				$5,000
				$0
				$5,000

FE COOPER AS OF: 05-Aug-99
STARTUP ON CLEAN SOILS - DAILY COST 10:05 AM
LT3-HT

TIS-5 - OPERATIONS

AVAILABILITY = 50.00%

OTHER DIRECT COSTS (ODCs)			**$/HR**		**$/DAY**	**RATE**	
UTILITIES							
GAS	3,180	THERMS/DAY @	$0.3510	/THERM	$1,116	265.00	THERM/HR
GAS FOR BUILDING			$0	/DAY	$0		
POWER	10,800	KW/DAY	$0.0559	/KWHR	$604	900.00	KW DEMAND
WATER	14,400	GPD	$0.0015	/GAL	$22	20.00	GPM
DIESEL			$10.00		$240		
PHONE	$2,000	/MO			$67		
SEWER	10	GPM	$0.010		$144	ESTIMATE	
MATERIAL HANDLING EQUIPMENT: 30 Days/Mo						RENTAL RATE/MO:	
FRONT END LOADER -L90		4	$133.33		$533	$4,000	
JOB TRUCK		1	$21.67		$22	$650	
BOBCAT		1	$50.00		$50	$1,500	
TRACTOR &TILLER		2	$66.67		$133	$2,000	
Dozer - Feed Prep		1	$133.33		$133	$4,000	
SCREENER - BOX		1	$250.00		$250	$7,500	
ASH Belt Conveyor		1	$500.00		$500	$15,000	
DUMP TRUCK		0	$150.00		$0	$4,500	
CLAMSHEEL BLDG		1	$166.67		$167	$5,000	
CARS		1	$26.67		$27	$800	
Office Equipment		1	$50.00		$50	$1,500	ESTIMATE
OTHER EXPENSES							
MAINT EXPENSE			$700	/DAY	$700		
MISC EXPENSES			$250	/DAY	$250		
OFFICE, DECON, & BREAK TRAILER		1	$147	/DAY	$147	$4,400	
JANITORIAL SERVICES			$50	/DAY	$36		By Client
PERSONNEL COSTS							
PER DIEMS	40.00	/MANDAY	3	PEOPLE	$120		
H.O. TRAVEL	800	/WK			$114		
HEALTH & SAFETY							
SAFETY EQUIPMENT	$30	/MANDAY	23	PEOPLE	$690	LEVEL C & D	
OSHA AIR SAMPLING			$1,200	/QTR	$13		
SAFETY EQUIPMNET	$50	/MANDAY	4	PEOPLE	$200	LEVEL B - FD PREP	
OTHER COSTS							
ADDITIVES	0	TONS	$110	/TON	$0	included in ops	
TANK RENTAL - 3, 20,000 GALLON TANKS			$50	3	$150	$1,500	PER TANK
PICTURES					$10	ALLOWANCE	
SALES TAX	6.00%				$248		
CHEMICALS							
CALIBRATION GASES			$4	/HR	$96		
CARBON vapor			$41.66	/HR	$1,000	CHANGE EVERY 3-DAYS	
CARBON - CONDENSATE					$500	TO WATER TREATMENT PLANT BY CLIENT	
Condensate Oil Disposal	$5 per gal	191.63 GPD			$958	50% OF FLOW TO BAGHOUSE- HAV	
	SUBTOTAL EXT. OTHER DIRECT COSTS (ODC				$9,289	GABE CHECK	
EXPENSE FOR LABORATORY							
Onsite Lab	10% QA/	1	$1,250		$1,250		PER mo
	Water Analysis		$36		$36	**800 per month**	

FE COOPER AS OF: 05-Aug-99
STARTUP ON CLEAN SOILS - DAILY COST 10:05 AM
LT3-HT

TOTAL ODC'S = $10,576

COST SUMMARY LT3-HT

10.00

	OVERHEA	CONT.	FEE
H.O. LABOR	160.00%	10.00%	10.00%
SITE LABOR	75.00%	10.00%	10.00%
TSD CRAFT LABOR	75.00%	10.00%	10.00%
CRD LABOR	160.00%	10.00%	10.00%
EXT ODC'S	0.00%	10.00%	10.00%
INT ODC'S	0.00%	10.00%	0.00%

MEXICAN WAGE ADJUSTMENT
0%

	G&A	COST/DAY			
DEPRECIATION (incl G+A)	16.00%	$0	$0	$0	PER MONTH
MAJOR MAINT (incl G+A)	16.00%	$500	$580	$15,000	PER MONTH

STARTUP 14
TRIAL BURN 0
OPERATIONS
DAYS FROM PRODUCTION SCHEDULE = 14 DAYS INCLUDING TRIAL BURN + SHAKEDOWN

ESCALATION = 0.00%

STARTUP OF LT3-HT ONLY

	TSD LABOR	SITE LABOR	CRAFT LABOR	THER RFW LABOR	EXT	INTERNALS	TOTAL
STARTUP	$11,122	$10,790	$51,280	$5,000	$148,058	$0	$226,250
ESCALATION	$0	$0	$0	$0	$0	$0	$0
TOTAL	$11,122	$10,790	$51,280	$5,000	$148,058	$0	$226,250
OVERHEADS	$17,795	$8,093	$38,460	$8,000	$0	$0	$72,347
MEXICAN WAGE ADJUST	$0	$0	$0	$0	$0	$0	$0
CONTING	$2,892	$1,888	$8,974.04	########	$14,806	$0	$29,860
PROFIT	$2,892	$1,888	$8,974.04	########	$14,806	$0	$29,860
USE TAX					$0		$0
MAJOR MAINT					$8,120	$0	$8,120
TOTAL	$34,699	$22,660	$107,688	$15,600	$185,790	$0	$366,438

COST PER TON = $72.71
COST/YD = 109.06
COST/DAY = $26,174

FE COOPER
OPERATIONS - DAILY COST
LT3-HT

AS OF: 05-Aug-99
10:05 AM

FIELD LABOR	RATE $/HR	HRS WORK/ DAY	TOTAL RAW LABOR	BASIS
MANAGEMENT STAFF				
SITE MANAGER	$32.00	7.5	$240	WESTON
SSHO	$20.33	7.5	$152	BY CLIENT
SITE ENGR	$23.00	7.5	$173	BY CLIENT
OFFICE MGR	$15.00	7.5	$113	WESTON
SITE CLERK	$8.00	5.7	$46	WESTON
LT3-HT OPERATIONS - 3 SHIFTS - 7 DAYS/WK				
CONTROL ROOM OPERATOR	$21.33	24.0	$512	WESTON
LOADER OPER - FEED	$20.33	24.0	$488	WESTON
TECHNICIAN	$20.33	24.0	$488	LOCAL EACH SHIFT
TECHNICIAN - ELEC	$20.33	24.0	$488	LOCAL EACH SHIFT
LOADER OPER- ASH	$20.33	24.0	$488	Dleted PER MGC ADD BELT
60 HR/WK STAFF - MAINT.				
MAINT SUPV	$21.33	9.0	$192	WESTON
LEAD MECHANIC	$20.33	9.0	$183	WESTON
LEAD MECHANIC	$20.33	9.0	$183	WESTON
LEAD E/I TECHNICIAN	$20.33	24.0	$488	WESTON -PER MGC
LEAD E/I TECHNICIAN	$20.33	0.0	$0	WESTON -PER MGC
MATERIAL PREP (60HR/WK) - Feed prep will be compensated by mositure reduction				
FEED PREP SUPV	$20.33	24.0	$488	LOCAL
FEED PREP OPERATOR	$20.33	0.0	$0	LOCAL
FEED PREP OPERATOR	$20.33	0.0	$0	LOCAL

SUBTOTAL	$4,721
SUBTOTAL FIELD LABOR-LOCAL	$3,997
SUBTOTAL FIELD LABOR-WESTON	$723

WESTON OFFICE LABOR	RATE $/HR	*HOURS/ WEEK*	*HOURS/ DAY*	*TOTAL RAW LABOR*
PROJECT DIRECTOR	$52.00	4	1	$42
TSD PROJECT MANAGER -THERMAL	$31.00	40	8	$248
SENIOR PROJECT ENGINEER	$31.00	10	2	$62
SAFETY & QA OFFICER	$38.00	8	2	$61
PROJ ANALYST	$15.00	10	2	$30
COST/SCHEDULE ENGINEER	$32.00	6	1	$38
CONTRACTS ADMIN	$32.00	1	0	$0
PROCUREMENT	$22.00	6	1	$26
OFFICE SUPPORT	$13.00	12	2	$31
SUBTOTAL OFFICE LABOR				$538

OTHER RFW OFFICE LABOR	*RATE* $/HR	*HOURS/* WEEK	*HOURS/* DAY	*TOTAL* RAW LABOR
				$0
				$0

TIS-5 - OPERATIONS

AVAILABILITY = 85.00%

OTHER DIRECT COSTS (ODCs)		**$/HR**	**$/DAY**	**RATE**
UTILITIES				
GAS	5,406 THERMS/DAY @	$0.3510 /THERM	$1,898	265.00 THERM/HR

FE COOPER
OPERATIONS - DAILY COST
LT3-HT

AS OF: 05-Aug-99
10:05 AM

GAS FOR BUILDING				$200	/DAY		$200		
POWER	18,360	KW/DAY		$0.0559	/KWHR		$1,026	900.00	KW DEMAND
WATER	24,480	GPD		$0.0015	/GAL		$37	20.00	GPM
DIESEL				$10.00			$240		
PHONE	$2,000	/MO					$67		
SEWER	10	GPM		$0.010			$144	ESTIMATE	
MATERIAL HANDLING EQUIPMENT: 30 Days/Mo								RENTAL RATE/MO:	
FRONT END LOADER -L90			4	$133.33			$533	$4,000	
JOB TRUCK			1	$21.67			$22	$650	
BOBCAT			1	$50.00			$50	$1,500	
TRACTOR &TILLER			0	$66.67			$0	$2,000	moisdtur
Dozer - Feed Prep			0	$133.33			$0	$4,000	mositure
SCREENER - BOX			1	$250.00			$250	$7,500	
ASH Belt Conveyor			1	$500.00			$500	$15,000	
DUMP TRUCK			0	$150.00			$0	$4,500	
CLAMSHEEL BLDG			1	$166.67			$167	$5,000	
CARS			1	$26.67			$27	$800	
Office Equipment			1	$50.00			$50	$1,500	ESTIMATE
OTHER EXPENSES									
MAINT EXPENSE				$700	/DAY		$700		
MISC EXPENSES				$250	/DAY		$250		
OFFICE, DECON, & BREAK TRAILERS			1	$37	/DAY		$37	$1,100	BY CLIENT
JANITORIAL SERVICES				$30	/DAY		$21		By Client
PERSONNEL COSTS									
PER DIEMS	40.00	/MANDAY		3	PEOPLE		$120		
H.O. TRAVEL	800	/WK					$114		
HEALTH & SAFETY									
SAFETY EQUIPMENT	$30	/MANDAY		23	PEOPLE		$690	LEVEL C & D	
OSHA AIR SAMPLING				$1,200	/QTR		$13		
SAFETY EQUIPMNET	$50	/MANDAY		3	PEOPLE		$150	LEVEL B - FD PREP	
OTHER COSTS									
ADDITIVES	6652	TONS		$110	/TON		$649		
CAUSTIC TANK RENTAL - 3, 20,000 GALLON TANK				$50		3	$150	$1,500	PER TANK
PICTURES							$10	ALLOWANCE	
SALES TAX	6.00%						$261		
CHEMICALS									
CALIBRATION GASES				$4	/HR		$96		
CARBON System				$41.66	/HR		$1,000	CHANGE EVERY 3-DAYS	
CARBON - CONDENSATE			GPM		lbs		$1,000	Condenstae Water Treament	
Condensate Oil Disposal	$5 per gallo		287.88	GPD			$1,439	329 Ton/day 3,500 PPM	
					/PD		$0		
SUBTOTAL EXT. OTHER DIRECT COSTS (ODCs)							$11,910	150% OF FLOW TO BAGHOUSE- HAV GABE CHECK	
EXPENSE FOR LABORATORY									
Onsite Lab + QA/QC			1	$1,250			$1,250	BY PEMEX	PER mo
Water Analysis				$36			$36	**800 per month**	
				TOTAL INT ODC'S =			$13,196		

COST SUMMARY LT3-HT

10.00

	OVERHEAD	CONT.	FEE
H.O. LABOR	160.00%	10.00%	10.00%
SITE LABOR	75.00%	10.00%	10.00%
TSD CRAFT LABOR	75.00%	10.00%	10.00%
CRD LABOR	160.00%	10.00%	10.00%

FE COOPER
OPERATIONS - DAILY COST
LT3-HT

AS OF: 05-Aug-99
10:05 AM

EXT ODC'S	0.00%	10.00%	10.00%
INT ODC'S	0.00%	10.00%	0.00%

	G&A	COST/DAY			
DEPRECIATION (incl G+A)	16.00%	$0	$0	$0	PER MONTH
MAJOR MAINT (incl G+A)	16.00%	$500	$580	$15,000	PER MONTH

SHAKEDOWN	30	
TRIAL BURN	7	NOT REQ'D
OPERATIONS	1091	
DAYS FROM PRODUCTION SCHEDULE =	1128	DAYS INCLUDING TRIAL BURN + SHAKEDOWN
TOTAL TONS PER PAY ITEM =	221,738	TONS INCLUDING TRIAL BURN + SHAKEDOWN
ESCALATION = 0.00%	2	10%

COSTS FOR TIS-5 PRODUCTION ONLY

	TSD LABOR	WESTON LABOR	MEXICAN LABOR	CRD LABOR	EXT	INTERNAL	TOTAL
TIS-5	$607,172	$815,526	$4,507,945	$0	$14,393,614	$0	$20,324,257
ESCALATION	$0	$0	$0	$0	$0	$0	$0
RAW COSTS	$607,172	$815,526	$4,507,945	$0	$14,393,614	$0	$20,324,257
OVERHEADS	$971,475	$611,645	$3,380,959	$0	$0	$0	$4,964,078
MEXICAN WAG ADJ	$0	$0	$0	$0	$0	$0	$0
CONTINGENCY	$157,865	$142,717	$788,890	$0	$1,439,361	$0	$2,528,834
PROFIT	$157,865	$142,717	$788,890	$0	$1,439,361	$0	$2,528,834
Equipment purchases/rentals			$0	$0	**$0**	$0	$0
MAJOR MAINTENANCE					$654,085	$0	$654,085
					$0	$0	$0
TOTAL COST-OPERS.	########	$1,712,605	$9,466,685	$0	$17,926,422	$0	$31,000,087

COST PER US TON =		**$139.81**
COST PER YARD =	**$**	**209.71**
COST/DAY =		**$27,488.84**

FE COOPER
DEMOBILIZATION OF LT3-HT ONLY

05-Aug

DEMOBILIZATION

PERIOD = 14 DAYS 2 *WEEKS*

ITEM	RATE	DAILY HOURS	PERIOD TOTAL	
PERSONNEL -FIELD				
SITE MGT				
SITE MANAGER	$32.00	10	$8,960	WESTON on site 2 WEEKS LATER
SSHO	$20.33	8	$2,277	BY CLIENT
QA/QC	$23.00	4	$1,288	BY CLIENT
OFFICE MNGR	$15.00	8	$1,680	WESTON
SITE CLERK	$8.00	4	$448	WESTON
Crew				
LEAD MECHANIC	$21.33	24	$7,167	WESTON
LEAD E/I TECH	$20.33	12	$3,415	
E/I TECH	$20.33	12	$3,415	WESTON W/PLANT OPERATOR
EQUIP OPERATORS	$20.33	24	$6,831	LOCAL
TECHNICIAN	$21.33	12	$3,583	WESTON
ADDL CRFT - 10%			$2,441.21	WESTON
		$41,506		41506.25
SUBTOTAL FIELD LABOR-LOCAL			$26,853	
SUBTOTAL FIELD LABOR-WESTON			$14,653	
HOME OFFICE SUPPORT		*TOTAL HRS PER WEEK*		
PROJECT DIRECTOR	$52	5	$520	
TSD PROJECT MANAGER -T	$31	40	$2,480	
SENIOR PROJECT ENGINEER	$31	40	$2,480	
SAFETY & QA OFFICER	$38	5	$380	
PROJ ANALYST	$15	10	$300	
COST/SCHEDULE ENGINEER	$22	5	$220	
CONTRACTS ADMIN	$32	5	$320	
PROCUREMENT	$22	20	$880	
OFFICE SUPPORT	$13	16	$416	
	TOTAL, HOME OFFICE		$7,996	
OTHER RFW COSTS				
DESIGN - PROCESS	$20.00	0	$0	
DESIGN - GEOTECH	$20.00	0	$0	
TOTAL, OTHER RFW			$ -	

FE COOPER
DEMOBILIZATION OF LT3-HT ONLY

05-Aug

EXTERNAL COSTS **DEMOBILIZATION COSTS**		**RATE**					**TOTAL**	
SUBCONTRACTORS								
MOVE TIS-5 UNIT OFFSITE		1 LS					$0	Next Job
MECHANICAL SUBCONTRACTORS		1 LS					$5,000	
ELECTRICAL SUBCONTRACTORS		1 LS					$5,000	
OXYGEN SUB							$0	
UTILITIES								
POWER REMOVAL							ABOVE	
TELEPHONE REMOVAL							$0	
WATER REMOVAL							ABOVE	
RELOCATION/TRAVEL								
MGMT RELOCATIONS	0	PEOPLE @	$7,500	PER EACH			$0	
CRAFT RELOCATIONS	0	PEOPLE @	$7,500	PER EACH			$0	
LIVING EXPENSES	3	PERSON @	$40.00	PER DAY			$1,680	
RELO PER DIEMS	0	PERSON @	$860.00	PER DAY			$0	
AIR FARE FOR RELOC	3	PERSON @	1.00	TRIPS @		$750.00	$2,250	*3 PP/EMPLOYEE*
HOME OFFICE TRAVEL	2	weeks @	$800	per week			$1,600	
CARS AT SITE	1	EACH@	800	PER MONT	1	MONTHS	$800	3 PP/CAR
OTHER EXPENSES	$/DAY	(PER WORK DAY)						
MAINT EXPENSES	$700.00						$13,720	adjusted for 7 d
MISC EXP	$250.00						$4,900	
ALL TRAILER	$150.00						$2,100	
JANITORIAL SERV	$30.00						$420	
HO TRAVEL	$2,000.00						$2,000	
SAFETY EQUIP	$50.00						$700	
CARS	$0.00						$0	
EQUIPMENT	$250.00						$3,500	
REMOVE EQUIP FROM SITE							$5,000	
JOB TRUCK	$25.00						$350	
POWER WASHER	$25.00						$350	
TOTAL, ODC'S DEMOBILIZATION							$49,370	

FE COOPER
DEMOBILIZATION OF LT3-HT ONLY

05-Aug

	OVH'D	CONT	FEE
H.O. LABOR	160.00%	10.00%	10.00%
SITE LABOR	75.00%	10.00%	10.00%
CRAFT LABOR	75.00%	10.00%	10.00%
OTHER RFW LABOR	160.00%	10.00%	10.00%
EXT ODC'S	0.00%	10.00%	10.00%
INT ODC'S	0.00%	10.00%	0.00%

	G+A	COST/DAY	TOTAL	COST/MO
DEPRECIATION	16.00%	$0	$0	$0
MAJOR MAINTENANCE	16.00%	$500	$580	$15,000
ESCALATION	0.00%	2	1.00	

DEMOBILIZATION OF LT3-HT ONLY

	TSD LABOR	SITE LABOR	CRAFT LABOR	OTHER RFW LABOR	EXT	INTERNALS	TOTAL
DEMOBILIZATION	$7,996	$14,653	$26,853		$49,370	$0	$98,872
ESCALATION	$0	$0	$0	$0	$0	$0	$0
TOTAL	$7,996	$14,653	$26,853	$0	$49,370	$0	$98,872
OVERHEADS	$12,794	$10,990	$20,140	$0	$0	$0	$43,923
MEXICAN WAGE ADJ	$0	$0	$0	$0	$0	$0	$0
CONTING	$2,079	$2,564	$4,699	$0	$4,937	$0	$14,280
PROFIT	$2,079	$2,564	$4,699	$0	$4,937	$0	$14,280
DEPRECIATION					$0	$0	$0
MAJOR MAINT					$9,473	$0	$9,473
TOTAL	$24,948	$30,771	$56,392	$0	$68,717	$0	$180,828

FE COOPER
Proposal WO No. _____

PRODUCTION EVALUATION 05-Aug

10.0 tph	Volume of Soil =	147,825	cubic yards	1.5000	221,738	tons
24 HOURS PER DAY WORK	Additivies =				0	
7 days per week	Weston material =			3%	6,652	
			Total, Net Tons =		***228,390***	***tons***

	Feed Rate (Tons)	"Up-Time"	Unit %	Daily Production (Tons)	Work on Days	Production Credit (Tons)	(Days)	Project (CY)	(Tons)
BASE CASE: 24 Hours per day - 7 days/wk									
Project Quantity								n/a	228,390
Production Estimate	10.00		85%	204.0		228,390	1,120		
Mobilization				0	N/A				
Startup			0%	0	N/A	0	0		0
Production Credit									
Shakedown	10.00		70%	168	30	5,040	(25)		(5,040)
Trial Burn	10.00		50%	120	7	840	(4)		(840)
Stand by time	0		0	0	N/A			(5,880)	
Interim Operations, 100%	10.00		75%	180	N/A	0	0		0
Full operations, Net					1,091		1,091		(222,510)
						actual product. =		(215,858)	
Demobilization					N/A				
On-Site Period					1,128		Total Production =		0

PRODUCTION DAYS =	*1,091 DAYS*	PROD PERIOD TONS =	215,858 TONS	228,390
TOTAL PERIOD INCLUDING SHAKEDOWN/TRIAL BURN =		1,128		

WAGE RATES

SITE MANAGER	WESTON	$32.00	Quess
SSHO	WESTON	$20.33	
QA/QC	WESTON	$23.00	
OFFICE MNGR	WESTON	$15.00	Quess
SITE CLERK	WESTON	$8.00	Quess
ILT3-HT OPERATIONS - 3 SHIFTS - 7 DAYS/WK			
CONTROL ROOM OPERATOR	WESTON	$21.33	
LOADER OPER - FEED	WESTON	$20.33	
TECHNICIAN	WESTON	$20.33	
TECHNICIAN - ELEC	WESTON	$20.33	
LOADER OPER- ASH	LOCAL	$20.33	
60 HR/WK STAFF			
MAINT SUPV	WESTON	$21.33	
LEAD MECHANIC	WESTON	$20.33	
LEAD MECHANIC	WESTON	$20.33	
LEAD E/I TECHNICIAN	WESTON	$20.33	
LEAD E/I TECHNICIAN	WESTON	$20.33	
MATERIAL PREP (60HR/WK) -			
FEED PREP SUPV	LOCAL	$20.33	
FEED PREP OPERATOR	LOCAL	$20.33	
FEED PREP OPERATOR	LOCAL	$20.33	

SUBTOTAL FIELD LABOR - CRAFT
SUBTOTAL FIELD LABOR-WESTO

OFFICE LABOR			*RATE $/HR*
PROJECT DIRECTOR	$52.00	1.0	52
TSD PROJECT MANAGER	$31.00	1.0	31
SENIOR PROJECT ENGINEER	$31.00	1.0	31
SAFETY & QA OFFICER	$38.00	1.0	38
PROJ ANALYST	$15.00	1.0	15
COST/SCHEDULE ENGINEER	$22.00	1.0	22
CONTRACTS ADMIN	$32.00	1.0	32
PROCUREMENT SPECIALIST	$22.00	1.0	22
OFFICE SUPPORT	$13.00	1.0	13
QA PLANS	$38.00	1.0	38
DESIGN ENGINEER (PLANS)	25	1.0	25
DESIGN ENGINEER (GEOTEC	35	1.0	35

	A	C	D	E	F	G
1		LT3-HT Process Calcs				
2						
3		Client:	GE - Pittsfield			
4		Case:	Preliminary Calcs			
5		Equipment:	Q2424 + HT			
6		Date	03-Aug-99			
7						
8						
9		General Data			Correction	
10		Ambient Temperature	70	Deg F	Factor	
11		Altitude	100	ft	1.004	
12						
13		Feed Data			Flow Rate	
14		Rate	20,000	lb/hr	lb/hr	
15		VOC's	0.0000	%	0.00	
16		SVOC's (Lube Oils)	0.0500	%	10	
17		H2O (Liquid)	29.00	%	5,800	
18		Ash	70.95	%	14,190	
19		Ash Carryover in Stage 1	0.00	%	0	
20		Ash Carryover in Stage 2	5.00	%	710	
21		VOC Data				
22		C	0.00	%	0.000	
23		H	0.00	%	0.000	
24		N	0.00	%	0.000	
25		O	0.00	%	0.000	
26		S	0.00	%	0.000	
27		Cl	0.00	%	0.000	
28		Gross Heating Value	40	Btu/lb		
29		SVOC Data				
30		C	55.00	%	6	
31		H	45.00	%	5	
32		N	0.00	%	0	
33		O	0.00	%	0	
34		S	0.00	%	0	
35		Cl	0.01	%	0	
36		Avg Boiling Point	590	Deg F		
37		Gross Heating Value	40	Btu/lb		
38						
39		Heat of Condensation	0	Btu/lb		
40		Temperature	70	Deg F		
41		Ash Heat Capacity	0.21	Btu/lb Deg F		
42		Net Heating Value	40	Btu/lb		
43						
44	Stage 1					
45						
46		Oil Heater - Stage 1				
47		Excess Air	3	wt. %		
48		Hot Oil Exit Temperature	32	Deg F		

	A	C	D	E	F	G
1		LT3-HT Process Calcs				
2						
3		Client:	GE - Pittsfield			
4		Case:	Preliminary Calcs			
5		Equipment:	Q2424 + HT			
6		Date	03-Aug-99			
7						
49		Hot Oil Circulation Rate	0.00001	gpm		
50		Oil Heater Rating	0.00001	MM Btu/hr		
51						
52		Thermal Processor Stage 1				
53		Mat'l Inlet Temperature	70	Deg F		
54		Mat'l Exit Temperature	70	Deg F		
55		Gas Exit Temperature	70	Deg F		
56		Rad/Conv Losses	0	Btu/hr		
57		Leakage	0	%		
58		Surface Area	0	ft2		
59		Maximum U Factor	0	Btu/hr ft2 Deg F		
60		VOC's Removal	0	%		
61		SVOC's Removal	0	%		
62		Exit Moisture Content	29	%		
63						
64		Water Cooled Condenser - Stage 1				
65		Exit Temperature	70	Deg F		
66		% VOC's condensed	0.0	%		
67						
68		Refrigerated Condenser - Stage 1				
69		Exit Temperature	70	Deg F		
70		% VOC's condensed	0.0	%		
71						
72		Reheater				
73		Exit Temperature	70	Deg F		
74						
75		Gas Phase Carbon Column				
76		Exit Temperature	70	Deg F		
77		% VOC's removed	0.0	%		
78		% SVOC's removed	0.0	%		
79						
80	Stage 2					
81						
82		Oil Heater - Stage 2				
83		Excess Air	3	wt. %		
84		Hot Oil Exit Temperature	600	Deg F		
85		Hot Oil Circulation Rate	450	gpm		
86		Oil Heater Rating	9.9	MM Btu/hr		

	A	C	D	E	F	G
1		LT3-HT Process Calcs				
2						
3		Client:	GE - Pittsfield			
4		Case:	Preliminary Calcs			
5		Equipment:	Q2424 + HT			
6		Date	03-Aug-99			
7						
87						
88		Thermal Processor Stage 2				
89		Mat'l Inlet Temperature	70	Deg F		
90		Mat'l Exit Temperature	213	Deg F		
91		Gas Exit Temperature	250	Deg F		
92		Sweep Gas Inlet Temp.	70	Deg F		
93		Rad/Conv Losses	150,000	Btu/hr		
94		Leakage	5	%		
95		Surface Area	1,227	ft2		
96		Maximum U Factor	10	Btu/hr ft2 Deg F		
97		VOC's Removal	0	%		
98		SVOC's Removal	0	%		
99		Exit Moisture Content	4.00	%		
100		Steam Sweep Temperature	500	Deg F		
101						
102		Water Cooled Condenser - Stage 2				
103		Exit Temperature	125	Deg F		
104		% VOC's condensed	50	%		
105		% SVOC's condensed	100.0	%		
106						
107		Refrigerated Condenser - Stage 2				
108		Exit Temperature	60	Deg F		
109		% VOC's condensed	90	%		
110		% SVOC's condensed	100	%		
111						
112						
113						
114		Thermal Desorber				
115		Mat'l Inlet Temperature	193	Deg F		
116		Mat'l Exit Temperature	1,000	Deg F		
117		Sweep Gas Inlet Temperature	70	Deg F		
118		Process Gas Exit Temperature	450	Deg F		
119		Furnaces Gas Temperature	1,600	Deg F		
120		Combustion Excess Oxygen	11.5	%		
121		LMTD	946.87	F Deg		
122		Rad/Conv Losses	1,000,000	Btu/hr		
123		Leakage	5	%		
124		Kiln Diameter	8.00	ft		
125		Kiln Length	40	ft		
126		Surface Area	1005.3	ft2		
127		Maximum U Factor	4.5	Btu/hr ft2 Deg F		
128		VOC's Removal	100	%		

	A	C	D	E	F	G
1		LT3-HT Process Calcs				
2						
3		Client:	GE - Pittsfield			
4		Case:	Preliminary Calcs			
5		Equipment:	Q2424 + HT			
6		Date	03-Aug-99			
7						
129		SVOC's Removal	100	%		
130		Exit Moisture Content	0	%		
131						
132		Product Quencher				
133		Discharge Temperature	150	DegF		
134		Exit Moisture Content	15	%		
135						
136						
137						
138						
139						
140						
141						
142						
143						
144						
145						
146		Fuel Parameters	(propane)	(propane)		(natural)
147		C	82	82		75
148		H	18	18		25
149		N	0			
150		O	0			
151		H2O	0			
152		Ash	0			
153		Gross Heating Value	21,661	21,661		23,333
154		Temperature	70			
155		Ash Heat Capacity	0.21			
156		Net Heating Value	19,911			
157		Fuel Density	0.114			
158						
159		Gas Released From Feed in Thermal Processor Stage 1				
160		Volatiles	0	lb/hr		
161		SemiVolatiles	0	lb/hr		
162		H2O	0	lb/hr		
163		Total Gas Released	0	lb/hr		
164						
165		Thrml Processor Discharge Rate - Stage 1	20,000	lb/hr		
166						
167		Heat Balance Thermal Processor - Stage 1			% of Load	
168		Heat into liquid H2O	0	Btu/hr	#DIV/0!	
169		Heat into liquid VOC's	0	Btu/hr	#DIV/0!	
170		Heat into liquid SVOC's	0	Btu/hr	#DIV/0!	

	A	C	D	E	F	G
1		LT3-HT Process Calcs				
2						
3		Client:	GE - Pittsfield			
4		Case:	Preliminary Calcs			
5		Equipment:	Q2424 + HT			
6		Date	03-Aug-99			
7						
171		Heat into inerts	0	Btu/hr	#DIV/0!	
172		Heat to vaporize H2O	0	Btu/hr	#DIV/0!	
173		Heat to vaporize VOC's	0	Btu/hr	#DIV/0!	
174		Heat to vaporize SVOC's	0	Btu/hr	#DIV/0!	
175		Heat loss from rad/conv	0	Btu/hr	#DIV/0!	
176		---	---	---	---	
177		Heat from Circulating Oil	0	Btu/hr	#DIV/0!	
178						
179		Return Oil Temperature	32	Deg F		
180						
181		Inlet Temperature Difference	-38	Deg F		
182		Exit Temperature Difference	-38	Deg F		
183		Delta T Log Mean	#DIV/0!	Deg F		
184						
185		**Calculated U Factor - Stage 1**	**#DIV/0!**	**Btu/hr ft2 Deg F**		
186						
187		Percent of Design	0	%		
188		Theoretical Stack Temp.	585	F	744	
189						
190		Oil Heater - Stage 1				
191		Fuel Combustion Calcs	Stoich	With Excess		
192		Air Calcs	lb/lb	lb/lb	Wt %	
193		CO2	3.001	3.001	15.69	
194		H2O	1.609	1.609	8.41	
195		N2	12.019	13.940	72.89	
196		O2	0.000	0.574	3.00	
197			---	---	---	
198		Total Products	16.629	19.124	100.00	
199						
200						
201		Combustion Calcs for Oil Heater - Stage 1				
202		Heat from Combustion Air	0	Btu/lb fuel		
203		Low Heating Value	19911	Btu/lb fuel		
204		Heat into Combustion Products				
205		CO2	-355	Btu/lb fuel		
206		H2O	-395	Btu/lb fuel		
207		N2	-1779	Btu/lb fuel		
208		O2	-67	Btu/lb fuel		
209		---	---	---	---	
210		Heat Released	17,316	Btu/lb fuel		
211						
212		Combustion Efficiency	87.0	%		

	A	C	D	E	F	G
1		LT3-HT Process Calcs				
2						
3		Client:	GE - Pittsfield			
4		Case:	Preliminary Calcs			
5		Equipment:	Q2424 + HT			
6		Date	03-Aug-99			
7						
213						
214		Fuel Flow Rate	0	lb/hr		
215		Combustion Air Required	0	lb/hr		
216						
217						
218						
219						
220		Oil Heater Exit Gas Summary - Stage 1				
221			lb/hr	wt %	scfm	Vol %
222		CO2	0	#DIV/0!	0	#DIV/0!
223		H2O	0	#DIV/0!	0	#DIV/0!
224		N2	0	#DIV/0!	0	#DIV/0!
225		O2	0	#DIV/0!	0	#DIV/0!
226		---	---	---	---	---
227		Total	0	#DIV/0!	0	#DIV/0!
228						
229		Heat Balance for Volatized Water and VOC's				
230		Heat into H20 (v)	0	Btu/hr		
231		Heat into VOC (v)	0	Btu/hr		
232		Heat into SVOC (v)	0	Btu/hr		
233		Heat into Ash Carryover	0	Btu/hr		
234		Heat into Leak air	0	Btu/hr		
235		---	---	---		
236		Total Heat Req'd of Sweep Air	0	Btu/hr		
237						
238		Heat Balance for Sweep Air				
239		Heat from sweep air/lb	137.9	Btu/lb		
240		Heat from leak air/lb	0.0	Btu/lb		
241		---	---	---		
242		Heat Released per lb Sweep Air	137.9	Btu/lb		
243						
244		Sweep Air Required - Stage 1	0	lb/hr		
245						
246		Thermal Processor Leak Air Summary - Stage 1				
247		Leak Air to Sweep Air	0	lb/hr		
248		Leak Air to VOC's	0	lb/hr		
249		Leak Air to SVOC's	0	lb/hr		
250		Leak Air to H2O	0	lb/hr		
251		---	---	---		
252		Total Leak Air Rate	0	lb/hr		
253						
254						

	A	C	D	E	F	G
1		LT3-HT Process Calcs				
2						
3		Client:	GE - Pittsfield			
4		Case:	Preliminary Calcs			
5		Equipment:	Q2424 + HT			
6		Date	03-Aug-99			
7						
255		Thermal Processor Exit Gas Summary - Stage 1				
256			lb/hr	wt %	scfm	Vol %
257		VOC's	0	#DIV/0!	0	#DIV/0!
258		SVOC's	0	#DIV/0!	0	#DIV/0!
259		CO2	#DIV/0!	#DIV/0!	#DIV/0!	#DIV/0!
260		H2O	#DIV/0!	#DIV/0!	#DIV/0!	#DIV/0!
261		N2	#DIV/0!	#DIV/0!	#DIV/0!	#DIV/0!
262		O2	#DIV/0!	#DIV/0!	#DIV/0!	#DIV/0!
263		Total	#DIV/0!	#DIV/0!	#DIV/0!	#DIV/0!
264						
265			lb/hr	lb/scf	gr/scf	gr/dscf
266		Ash Carryover	0	#DIV/0!	#DIV/0!	#DIV/0!
267						
268						
269		Processor Gas Flow Summary Stage 1				
270			lb/hr	scfm	Deg F	acfm
271		Oil Heater Combustion Air	0	0	70	0
272		Oil Heater Fuel	0	0	70	0
273		Oil Heater Combustion	0	0	585	0
274		Oil Heater Exhaust	0	#DIV/0!	585	#DIV/0!
275		Sweep Air	0	#DIV/0!	585	#DIV/0!
276		Processor Leak Air	0	0	70	0
277		Gas Released from Feed	0	0	212	0
278		Processor Exit Gas	0	#DIV/0!	70	#DIV/0!
279		Ash Carryover	0	0.00	70	0.00
280						
281						
282	Water Cooled Condenser - Stage 1					
283						
284						
285		Mass Balance				
286		Noncondensables	#DIV/0!	lb/hr		
287		VOC exiting condenser	0	lb/hr		
288		SVOC exiting condenser	0	lb/hr		
289		Total Dry "Air" Exiting	#DIV/0!	lb/hr		
290						
291		Humidity at Condenser Exit	0.016	lb H2O / lb dry air		
292						
293		Water vapor exiting condenser	#DIV/0!	lb/hr		
294						

	A	C	D	E	F	G
1		LT3-HT Process Calcs				
2						
3		Client:	GE - Pittsfield			
4		Case:	Preliminary Calcs			
5		Equipment:	Q2424 + HT			
6		Date	03-Aug-99			
7						
295		Liquid Balance				
296		H2O liquid exit condenser	#DIV/0!	lb/hr		
297		VOC liquid exit condenser	0	lb/hr		
298		SVOC liquid exit condenser	0	lb/hr		
299		---	---	---		
300		Total Liquid Condensate	#DIV/0!	lb/hr		
301						
302		Water Cooled Condenser Heat Balance				
303		Heat from VOC	0	Btu/hr		
304		Heat from SVOC	0	Btu/hr		
305		Heat from CO2	#DIV/0!	Btu/hr		
306		Heat from H2O	#DIV/0!	Btu/hr		
307		Heat from N2	#DIV/0!	Btu/hr		
308		Heat from O2	#DIV/0!	Btu/hr		
309		Heat from condensing VOC	0	Btu/hr		
310		Heat from condensing SVOC	0	Btu/hr		
311		Heat from condensing H2O	#DIV/0!	Btu/hr		
312		Heat from Condenser	#DIV/0!	Btu/hr		
313						
314						
315		Condenser Exit Summary				
316						
317		Gas Phase	lb/hr	wt %	scfm	Vol %
318		VOC's	0.00	#DIV/0!	0	#DIV/0!
319		SVOC's	0.00	#DIV/0!	0	#DIV/0!
320		CO2	#DIV/0!	#DIV/0!	#DIV/0!	#DIV/0!
321		H2O	#DIV/0!	#DIV/0!	#DIV/0!	#DIV/0!
322		N2	#DIV/0!	#DIV/0!	#DIV/0!	#DIV/0!
323		O2	#DIV/0!	#DIV/0!	#DIV/0!	#DIV/0!
324		---	---	---	---	---
325		Total	#DIV/0!	#DIV/0!	#DIV/0!	#DIV/0!
326						
327		Liquid Phase	lb/hr	wt %	gpm	Vol %
328		VOC's	0.00	#DIV/0!	0.0	#DIV/0!
329		SVOC's	0.00	#DIV/0!	0.0	#DIV/0!
330		H2O	#DIV/0!	#DIV/0!	#DIV/0!	#DIV/0!
331		---	---	---	---	---
332		Total	#DIV/0!	#DIV/0!	#DIV/0!	#DIV/0!
333						
334						
335						
336	Refrigerated Condenser - Stage 1					

	A	C	D	E	F	G
1		LT3-HT Process Calcs				
2						
3		Client:	GE - Pittsfield			
4		Case:	Preliminary Calcs			
5		Equipment:	Q2424 + HT			
6		Date	03-Aug-99			
7						
337						
338		Mass Balance				
339						
340		Noncondensables	#DIV/0!	lb/hr		
341		VOC exiting condenser	0	lb/hr		
342		SVOC exiting condenser	0	lb/hr		
343		---	---	---		
344		Total Dry "Air" Exiting	#DIV/0!	lb/hr		
345						
346		Humidity at Condenser Exit	0.016	lb H2O / lb dry air		
347						
348		Water vapor exiting condenser	#DIV/0!	lb/hr		
349						
350		Liquid Balance				
351		H2O liquid exit condenser	#DIV/0!	lb/hr		
352		VOC liquid exit condenser	0	lb/hr		
353		SVOC liquid exit condenser	0	lb/hr		
354		---	---	---		
355		Total Liquid Condensate	#DIV/0!	lb/hr		
356						
357		Condenser Heat Balance				
358		Heat from VOC	0	Btu/hr		
359		Heat from SVOC	0	Btu/hr		
360		Heat from CO2	#DIV/0!	Btu/hr		
361		Heat from H2O	#DIV/0!	Btu/hr		
362		Heat from N2	#DIV/0!	Btu/hr		
363		Heat from O2	#DIV/0!	Btu/hr		
364		Heat from condensing VOC	0	Btu/hr		
365		Heat from condensing SVOC	0	Btu/hr		
366		Heat from condensing H2O	#DIV/0!	Btu/hr		
367		Heat from Refrigerant	#DIV/0!	Btu/hr		
368						
369						
370		Refrigerated Condenser Exit Summary				
371						
372		Gas Phase	lb/hr	wt %	scfm	Vol %
373		VOC's	0	#DIV/0!	0	#DIV/0!
374		SVOC's	0	#DIV/0!	0	#DIV/0!
375		CO2	#DIV/0!	#DIV/0!	#DIV/0!	#DIV/0!
376		H2O	#DIV/0!	#DIV/0!	#DIV/0!	#DIV/0!
377		N2	#DIV/0!	#DIV/0!	#DIV/0!	#DIV/0!
378		O2	#DIV/0!	#DIV/0!	#DIV/0!	#DIV/0!

	A	C	D	E	F	G
1		LT3-HT Process Calcs				
2						
3		Client:	GE - Pittsfield			
4		Case:	Preliminary Calcs			
5		Equipment:	Q2424 + HT			
6		Date	03-Aug-99			
7						
379		---	---	---	---	---
380		Total	#DIV/0!	#DIV/0!	#DIV/0!	#DIV/0!
381						
382						
383		Liquid Phase	lb/hr	wt %	gpm	Vol %
384		VOC's	0	#DIV/0!	0.00	#DIV/0!
385		SVOC's	0	#DIV/0!	0.00	#DIV/0!
386		H2O	#DIV/0!	#DIV/0!	#DIV/0!	#DIV/0!
387		---	---	---	---	---
388		Total	#DIV/0!	#DIV/0!	#DIV/0!	#DIV/0!
389						
390						
391		Reheater Heat Balance				
392		Heat from VOC	0	Btu/hr		
393		Heat from SVOC	0	Btu/hr		
394		Heat from CO2	#DIV/0!	Btu/hr		
395		Heat from H2O	#DIV/0!	Btu/hr		
396		Heat from N2	#DIV/0!	Btu/hr		
397		Heat from O2	#DIV/0!	Btu/hr		
398		---	---	---		
399		Heat from Resistance Heaters	#DIV/0!	Btu/hr		20000
400			#DIV/0!	Kilowatts		5.86
401						
402		Air Polution Control System Gas Flow Summary - Stage 1				
403						
404			lb/hr	scfm	Deg F	acfm
405		Processor Exit Gas	0	#DIV/0!	70	#DIV/0!
406		Water Cooled Condenser Exit Gas	#DIV/0!	#DIV/0!	70	#DIV/0!
407		Refrigerated Condenser Exit Gas	#DIV/0!	#DIV/0!	70	#DIV/0!
408		Reheater Exit Gas	#DIV/0!	#DIV/0!	70	#DIV/0!
409						
410						
411		Process Gas Recycle Summary:				
412			lb/hr	wt %	scfm	Vol %
413		VOC's	0	#DIV/0!	0	#DIV/0!
414		SVOC's	0	#DIV/0!	0	#DIV/0!
415		CO2	#DIV/0!	#DIV/0!	#DIV/0!	#DIV/0!
416		H2O	#DIV/0!	#DIV/0!	#DIV/0!	#DIV/0!
417		N2	#DIV/0!	#DIV/0!	#DIV/0!	#DIV/0!
418		O2	#DIV/0!	#DIV/0!	#DIV/0!	#DIV/0!
419		Ash	0	#DIV/0!	0.00	#DIV/0!
420		Total	#DIV/0!	#DIV/0!	#DIV/0!	#DIV/0!

	A	C	D	E	F	G
1		LT3-HT Process Calcs				
2						
3		Client:	GE - Pittsfield			
4		Case:	Preliminary Calcs			
5		Equipment:	Q2424 + HT			
6		Date	03-Aug-99			
7						
421						
422						
423						
424		Condensate Mixture Balance				
425			Cond #1	Cond #2	Total	Wt %
426			(lb/hr)	(lb/hr)	(lb/hr)	
427		Organics	0.0	0.0	0.0	#DIV/0!
428		Water	#DIV/0!	#DIV/0!	#DIV/0!	#DIV/0!
429		---	---	---	---	---
430		Total	#DIV/0!	#DIV/0!	#DIV/0!	#DIV/0!
431						
432						
433			Cond #1	Cond #2	Total	Vol %
434			(gpm)	(gpm)	(gpm)	
435		Organics	0.0	0.0	0.0	#DIV/0!
436		Water	#DIV/0!	#DIV/0!	#DIV/0!	#DIV/0!
437		---	---	---	---	---
438		Total	#DIV/0!	#DIV/0!	#DIV/0!	#DIV/0!
439						
440						
441		Condensate Mixture Heat Balance - Stage 1				
442						
443		Heat from Condensate #1				
444		Organics	0	Btu/hr		
445		Water	#DIV/0!	Btu/hr		
446		Heat from Condensate #2				
447		Organics	0	Btu/hr		
448		Water	#DIV/0!	Btu/hr		
449		---	---	---		
450		Total Heat from Condensate	#DIV/0!	Btu/hr		
451						
452		Temperature of Combined Condensate		#DIV/0!	Deg F	
453						
454						
455						
456						
457	Stage 2					
458						
459		Gas Released From Feed in Thermal Processor Stage 2				
460		Volatiles	0	lb/hr		
461		SemiVolatiles	0	lb/hr		
462		H2O	5,209	lb/hr		

	A	C	D	E	F	G
1		LT3-HT Process Calcs				
2						
3		Client:	GE - Pittsfield			
4		Case:	Preliminary Calcs			
5		Equipment:	Q2424 + HT			
6		Date	03-Aug-99			
7						
463		Total Gas Released	5,209	lb/hr		
464						
465		Thrml Processor Discharge Rate - Stage 2	14,082	lb/hr		
466						
467		Heat Balance Thermal Processor - Stage 2			% of Load	
468		Heat into liquid H2O	824,191	Btu/hr	12.74	
469		Heat into liquid VOC's	0	Btu/hr	0.00	
470		Heat into liquid SVOC's	(1,206)	Btu/hr	-0.02	
471		Heat into inerts	426,126	Btu/hr	6.59	
472		Heat to vaporize H2O	5,069,451	Btu/hr	78.37	
473		Heat to vaporize VOC's	0	Btu/hr	0.00	
474		Heat to vaporize SVOC's	0	Btu/hr	0.00	
475		Heat loss from rad/conv	150,000	Btu/hr	2.32	
476		----------	----------	----------	----------	
477		Heat from Circulating Oil	6,468,561	Btu/hr	100.00	
478						
479		Return Oil Temperature - Stage 2	541	Deg F		
480						
481		Inlet Temperature Difference	387	Deg F		
482		Exit Temperature Difference	471	Deg F		
483		Delta T Log Mean	427	Deg F		
484						
485		**Calculated U Factor - Stage 2**	**12.33**	**Btu/hr ft2 Deg F**		
486						
487		Percent of Design	65	%		
488		Theoretical Stack Temp.	744	F		
489						
490		Oil Heater - Stage 2				
491		Fuel Combustion Calcs	Stoich	With Excess		
492		Air Calcs	lb/lb	lb/lb	Wt %	
493		CO2	3.001	3.001	15.69	
494		H2O	1.609	1.609	8.41	
495		N2	12.019	13.940	72.89	
496		O2	0.000	0.574	3.00	
497			---------	---------	----------	
498		Total Products	16.629	19.124	100.00	
499						
500						
501		Combustion Calcs for Oil Heater - Stage 2				
502		Heat from Combustion Air	0	Btu/lb fuel		
503		Low Heating Value	19911	Btu/lb fuel		
504		Heat into Combustion Products				

	A	C	D	E	F	G
1		LT3-HT Process Calcs				
2						
3		Client:	GE - Pittsfield			
4		Case:	Preliminary Calcs			
5		Equipment:	Q2424 + HT			
6		Date	03-Aug-99			
7						
505		CO2	-465	Btu/lb fuel		
506		H2O	-517	Btu/lb fuel		
507		N2	-2329	Btu/lb fuel		
508		O2	-88	Btu/lb fuel		
509		---	---	---	---	
510		Heat Released	16,512	Btu/lb fuel		
511						
512		Combustion Efficiency	82.9	%		
513						
514		Fuel Flow Rate	392	lb/hr		
515		Combustion Air Required	7,100	lb/hr		
516						
517						
518						
519						
520		Oil Heater Exit Gas Summary - Stage 2				
521			lb/hr	wt %	scfm	Vol %
522		CO2	1,176	15.69	172	10.13
523		H2O	630	8.41	226	13.29
524		N2	5,461	72.89	1,257	73.92
525		O2	225	3.00	45	2.66
526		---	---	---	---	---
527		Total	7,492	100.00	1,701	100.00
528						
529		Heat Balance for Volatized Water and VOC's				
530		Heat into H20 (v)	93,192	Btu/hr		
531		Heat into VOC (v)	0	Btu/hr		
532		Heat into SVOC (v)	0	Btu/hr		
533		Heat into Ash Carryover	5,513	Btu/hr		
534		Heat into Leak air	11,189	Btu/hr		
535		---	---	---		
536		Total Heat Req'd of Combind Sweep Gas	109,894	Btu/hr		
537						
538						
539		Process Gas Recycle from Stage 1:				
540						
541		Temperature=	70	deg F		
542						
543			lb/hr	wt %	scfm	Vol %
544		VOC's	0	#DIV/0!	0	#DIV/0!
545		SVOC's	0	#DIV/0!	0	#DIV/0!
546		CO2	0	#DIV/0!	0	#DIV/0!

	A	C	D	E	F	G
1		LT3-HT Process Calcs				
2						
3		Client:	GE - Pittsfield			
4		Case:	Preliminary Calcs			
5		Equipment:	Q2424 + HT			
6		Date	03-Aug-99			
7						
547		H2O	0	#DIV/0!	0	#DIV/0!
548		N2	0	#DIV/0!	0	#DIV/0!
549		O2	0	#DIV/0!	0	#DIV/0!
550		Ash	0	#DIV/0!	0.00	#DIV/0!
551		Total	0	#DIV/0!	0	#DIV/0!
552						
553		Heat Balance on Sweep Gas Preheater				
554						
555		Heat into VOC's	0	Btu/hr		
556		Heat intoSVOC's	0	Btu/hr		
557		Heat into CO2	0	Btu/hr		
558		Heat into H2O	0	Btu/hr		
559		Heat into N2	0	Btu/hr		
560		Heat into O2	0	Btu/hr		
561		Heat into Ash	0	Btu/hr		
562		Heat into Leak Air	0	Btu/hr		
563		Total Heat from Preheated Recycle	-	Btu/hr		
564						
565		Percent of Preheated Recycle to Stage 2 Processor		0%		
566						
567		Heat from Preheated Recycle to Stage 2	0	Btu/hr		
568		Heat Req'd from Steam Sweep Gas	109,894	Btu/hr		
569						
570						
571		Heat Balance for Steam Sweep				
572		Heat from steam air/lb	119.2	Btu/lb		
573		Heat from leak air/lb	-4.3	Btu/lb		
574		----------	----------	----------		
575		Heat Releasd/ lb Steam	114.9	Btu/lb		
576						
577		Sweep Gas Required from Steam	956	lb/hr		
578		Sweep Gas from Recycle	-	lb/hr		
579						
580		Total Sweep Gas	956	lb/hr		
581						
582						
583		Thermal Processor Leak Air Summary - Stage 2				
584		Leak Air to Steam	48	lb/hr		
585		Leak Air to Sweep Gas from Recycle	0	lb/hr		
586		Leak Air to VOC's	0	lb/hr		
587		Leak Air to SVOC's	0	lb/hr		
588		Leak Air to H2O	260	lb/hr		

	A	C	D	E	F	G
1		LT3-HT Process Calcs				
2						
3		Client:	GE - Pittsfield			
4		Case:	Preliminary Calcs			
5		Equipment:	Q2424 + HT			
6		Date	03-Aug-99			
7						
589		----------	----------	----------		
590		Total Leak Air Rate	308	lb/hr		
591						
592						
593		Thermal Processor Exit Gas Summary - Stage 2				
594			lb/hr	wt %	scfm	Vol %
595		VOC's	0	0.00	0	0.00
596		SVOC's	0	0.00	0	0.00
597		CO2	0	0.00	0	0.00
598		H2O	6,165	95.24	2,210	96.98
599		N2	237	3.67	55	2.40
600		O2	71	1.10	14	0.63
601		Total	6,473	100.00	2279	100.00
602						
603			lb/hr	lb/scf	gr/scf	gr/dscf
604		Ash Carryover	709.5	0.0052	36.33	1201.22
605						
606						
607		Processor Gas Flow Summary - Stage 2				
608			lb/hr	scfm	Deg F	acfm
609		Oil Heater Combustion Air	7,100	1,586	70	1,591
610		Oil Heater Fuel	392	57	70	57
611		Oil Heater Combustion	7,492	1,701	744	3,879
612		Oil Heater Exhaust	7,492	1,701	744	3,879
613		Sweep Gas from Steam	956	343	500	623
614		Sweep Gas from Recycle	0	0	70	0
615		Processor Leak Air	308	69	70	69
616		Gas Released from Feed	5,209	1,867	590	3,712
617		Processor Exit Gas	6,473	2,278	250	3,063
618						
619						
620						
621						
622		**Thermal Desorber**				
623						
624		Indirect Kiln Shell Surface Area	1005.3	ft2		
625		Maximum U Factor	4.50	Btu/hr ft2 Deg F		
626		Delta T Log Mean	946.87	F Deg		
627						
628		Heat Duty Available	4,283,517	Btu/hr		
629						
630		Gas Released From Feed in Thermal Desorber				

	A	C	D	E	F	G
1		LT3-HT Process Calcs				
2						
3		Client:	GE - Pittsfield			
4		Case:	Preliminary Calcs			
5		Equipment:	Q2424 + HT			
6		Date	03-Aug-99			
7						
631		Volatiles	0	lb/hr		
632		SemiVolatiles	10	lb/hr		
633		H2O	591	lb/hr		
634		Total Gas Released	601	lb/hr		
635						
636		Thermal Desorber Discharge Rate	13,481	lb/hr		
637						
638		Heat Balance Thermal Desorber			% of Load	
639		Heat into liquid H2O	477,139	Btu/hr	10.74	
640		Heat into liquid VOC's	0	Btu/hr	0.00	
641		Heat into liquid SVOC's	1,270	Btu/hr	0.03	
642		Heat into inerts	2,386,434	Btu/hr	53.73	
643		Heat to vaporize H2O	575,438	Btu/hr	12.96	
644		Heat to vaporize VOC's	0	Btu/hr	0.00	
645		Heat to vaporize SVOC's	1,500	Btu/hr	0.03	
646		Heat loss from rad/conv	1,000,000	Btu/hr	22.51	
647		---	---	---	---	
648		Heat Duty Required	4,441,781	Btu/hr	100.00	
649						
650						
651		Desorber Furnace				
652		Fuel Combustion Calcs	Stoich	With Excess		
653		Air Calcs	lb/lb	lb/lb	Wt %	
654		CO2	3.001	3.001	9.02	
655		H2O	1.609	1.609	4.84	
656		N2	12.019	24.824	74.64	
657		O2	0.000	3.825	11.50	
658			---	---	---	
659		Total Products	16.629	33.259	100.00	
660						
661		Combustion Calcs for Furnace				
662		Heat from Combustion Air	0	Btu/lb fuel		
663		Low Heating Value	19911	Btu/lb fuel		
664		Heat into Combustion Products				
665		CO2	-1159	Btu/lb fuel		
666		H2O	-1267	Btu/lb fuel		
667		N2	-9792	Btu/lb fuel		1600
668		O2	-1367	Btu/lb fuel		
669		---	---	---	---	
670		Heat Released	6,326	Btu/lb fuel		
671						
672		Furnace Combustion Efficiency	31.8	%		

	A	C	D	E	F	G
1		LT3-HT Process Calcs				
2						
3		Client:	GE - Pittsfield			
4		Case:	Preliminary Calcs			
5		Equipment:	Q2424 + HT			
6		Date	03-Aug-99			
7						
673		Approximate Flame Temperature	2372.6	Deg F		
674						
675						
676		Furnace Fuel Flow Rate				
677		@ 100% Heat Transfer Efficiency	702	lb/hr		
678			13,980,888	Btu/hr		
679						
680		Furnace Combustion Air Required	10,974	lb/hr		
681						
682						
683		Furnace Exit Gas Summary				
684			lb/hr	wt %	scfm	Vol %
685		CO2	2,107	9.02	309	5.86
686		H2O	1,130	4.84	405	7.69
687		N2	17,430	74.64	4,012	76.18
688		O2	2,686	11.50	541	10.26
689		---	---	---	---	---
690		Total	23,353	100.00	5,267	100.00
691						
692		Heat Balance for Direct Quench of Treated Soil				
693		Heat Lost by Soil	2,406,269	Btu/hr		
694		Water Evaporated at 212 F	2,158	lb/hr		
695			773	scfm		
696						
697		Product Cooler Calculations				
698		Moisture in Product	2,379	lb/hr		
699		Total Water Consumption	4,537	lb/hr		
700			9.1	gpm		
701						
702		Heat Balance for Volatized Components				
703		Heat into H20 (v)	78,544	Btu/hr		
704		Heat into VOC (v)	0	Btu/hr		
705		Heat into SVOC (v)	(700)	Btu/hr		
706		Heat into Ash Carryover	0	Btu/hr		
707		Heat into Leak air	2,760	Btu/hr		
708		---	---	---		
709		Total Heat Req'd from Sweep Gas	80,604	Btu/hr		
710						
711						
712		Process Gas Recycle from Stage 1 into Desorber and Steam from Product Quench				
713						
714			lb/hr	wt %	scfm	Vol %

	A	C	D	E	F	G
1		LT3-HT Process Calcs				
2						
3		Client:	GE - Pittsfield			
4		Case:	Preliminary Calcs			
5		Equipment:	Q2424 + HT			
6		Date	03-Aug-99			
7						
715		VOC's	0	0.00	0	0.00
716		SVOC's	0	0.00	0	0.00
717		CO2	0	0.00	0	0.00
718		H2O	2,158	100.00	773	100.00
719		N2	0	0.00	0	0.00
720		O2	0	0.00	0	0.00
721		Ash	0	0.00	0.00	0.00
722		Total	2,158	100	773	100
723						
724						
725		Thermal Desorber Leak Air Summary				
726		Leak Air to Sweep Gas	108	lb/hr		
727		Leak Air to VOC's	0	lb/hr		
728		Leak Air to SVOC's	1	lb/hr		
729		Leak Air to H2O	30	lb/hr		
730		----------	----------	----------		
731		Total Leak Air Rate	138	lb/hr		
732						
733						
734						
735						
736		Thermal Desorber Exit Gas Summary				
737			lb/hr	wt %	scfm	Vol %
738		VOC's	0	0.00	0	0.00
739		SVOC's	10	0.35	0	0.01
740		CO2	0	0.00	0	0.00
741		H2O	2,749	94.89	985	96.95
742		N2	106	3.67	24	2.41
743		O2	32	1.10	6	0.63
744		Ash	0	0.00	0.00	0.00
745		Total	2,897	100	1,016	100
746						
747			lb/hr	lb/scf	gr/scf	gr/dscf
748		Ash Carryover	0	0.0000	0.00	0.00
749						
750		**Desorber Exit Gas Velocity**	**9.0**	**ft/min**	4.52	ft3/lb
751						
752		Desorber Gas Flow Summary - Stage 3				
753						
754			lb/hr	scfm	Deg F	acfm
755		Furnace Combustion Air	10,974	2,451	70	2,460
756		Furnace Fuel	702	103	70	103

	A	C	D	E	F	G
1		LT3-HT Process Calcs				
2						
3		Client:	GE - Pittsfield			
4		Case:	Preliminary Calcs			
5		Equipment:	Q2424 + HT			
6		Date	03-Aug-99			
7						
757		Furnace Combustion Gases	23,353	5,267	1600	20,545
758		Quench Water Gases	2,158	773	212	984
759		Sweep Gas from Recycle	0	0	450	0
760		Desorber Leak Air	138	31	70	31
761		Gas Released from Feed	601	212	450	365
762		Ash Carryover	0	0.00	450	0
763		Desorber Exit Gas	2,897	1,016	450	1,751
764						
765						
766		Combined Gases from Stage 2 Thermal Processor and Desorber Exit Gas Summary				
767						
768			lb/hr	wt %	scfm	Vol %
769		VOC's	0	0.00	0	0.00
770		SVOC's	10	0.11	0	0.00
771		CO2	0	0.00	0	0.00
772		H2O	8,914	95.13	3,195	96.97
773		N2	344	3.67	79	2.40
774		O2	103	1.10	21	0.63
775		Total	9,370	100	3,295	100
776						
777			lb/hr	lb/scf	gr/scf	gr/dscf
778		Ash Carryover	709.5	0.0036	25.12	828.71
779						
780						
781						
782		Combined Gas Flow Summary - Stages 2 & 3				
783			lb/hr	scfm	Deg F	acfm
784		Combined Exit Gas	9,370	3,295	312	4,815
785						
786						
787						
788		Water Cooled Condenser - Stage 2				
789						
790						
791		Mass Balance - Stage 2				
792		Noncondensables	446	lb/hr		
793		VOC exiting condenser	0	lb/hr		
794		SVOC exiting condenser	0	lb/hr		
795		Total Dry "Air" Exiting	446	lb/hr		
796						

	A	C	D	E	F	G
1		LT3-HT Process Calcs				
2						
3		Client:	GE - Pittsfield			
4		Case:	Preliminary Calcs			
5		Equipment:	Q2424 + HT			
6		Date	03-Aug-99			
7						
797		Humidity at Condenser Exit	0.096	lb H2O / lb dry air		
798						
799		Water vapor exiting condenser	43	lb/hr		
800						
801		Liquid Balance				
802		H2O liquid exit condenser	8,871	lb/hr		
803		VOC liquid exit condenser	0	lb/hr		
804		SVOC liquid exit condenser	10	lb/hr		
805						
806		Total Liquid Condensate	8,881	lb/hr		
807						
808		Water Cooled Condenser Heat Balance - Stage 2				
809		Heat from VOC	0	Btu/hr		
810		Heat from SVOC	1,625	Btu/hr		
811		Heat from CO2	0	Btu/hr		
812		Heat from H2O	1,357,352	Btu/hr		
813		Heat from N2	27,293	Btu/hr		
814		Heat from O2	7,238	Btu/hr		
815		Heat from condensing VOC	0	Btu/hr		
816		Heat from condensing SVOC	2,000	Btu/hr		
817		Heat from condensing H2O	9,350,134	Btu/hr		
818		Heat from Condenser	10,745,642	Btu/hr		
819						
820						
821		Water Cooled Condenser Exit Summary - Stage 2				
822						
823		Gas Phase	lb/hr	wt %	scfm	Vol %
824		VOC's	0	0.00	0	0.00
825		SVOC's	0	0.00	0	0.00
826		CO2	0	0.00	0	0.00
827		H2O	43	8.78	15	13.37
828		N2	344	70.24	79	68.69
829		O2	103	20.98	21	17.94
830						
831		Total	489	100.00	115	100.00
832						
833		Liquid Phase	lb/hr	wt %	gpm	Vol %
834		VOC's	0	0.00	0.0	0.00
835		SVOC's	10	0.11	0.0	0.13
836		H2O	8,871	99.89	17.7	99.87
837						
838		Total	8,881	100.00	17.7	100.00

	A	C	D	E	F	G
1		LT3-HT Process Calcs				
2						
3		Client:	GE - Pittsfield			
4		Case:	Preliminary Calcs			
5		Equipment:	Q2424 + HT			
6		Date	03-Aug-99			
7						
839						
840						
841						
842	Refrigerated Condenser - Stage 2					
843						
844		Mass Balance				
845						
846		Noncondensables	446	lb/hr		
847		VOC exiting condenser	0	lb/hr		
848		SVOC exiting condenser	0	lb/hr		
849		----------	----------	----------		
850		Total Dry "Air" Exiting	446	lb/hr		
851						
852		Humidity at Condenser Exit	0.011	lb H2O / lb dry air		
853						
854		Water vapor exiting condenser	5	lb/hr		
855						
856		Liquid Balance				
857		H2O liquid exit condenser	38	lb/hr		
858		VOC liquid exit condenser	0	lb/hr		
859		SVOC liquid exit condenser	0	lb/hr		
860		----------	----------	----------		
861		Total Liquid Condensate	38	lb/hr		
862						
863		Condenser Heat Balance				
864		Heat from VOC	0	Btu/hr		
865		Heat from SVOC	0	Btu/hr		
866		Heat from CO2	0	Btu/hr		
867		Heat from H2O	1,300	Btu/hr		
868		Heat from N2	5,419	Btu/hr		
869		Heat from O2	1,362	Btu/hr		
870		Heat from condensing VOC	0	Btu/hr		
871		Heat from condensing SVOC	0	Btu/hr		
872		Heat from condensing H2O	40,016	Btu/hr		
873		Heat from Refrigerant	48,096	Btu/hr		
874						
875						
876		Refrigerated Condenser Exit Summary -Stage 2				
877						
878		Gas Phase	lb/hr	wt %	scfm	Vol %
879		VOC's	0	0.00	0	0.00
880		SVOC's	0	0.00	0	0.00

	A	C	D	E	F	G
1		LT3-HT Process Calcs				
2						
3		Client:	GE - Pittsfield			
4		Case:	Preliminary Calcs			
5		Equipment:	Q2424 + HT			
6		Date	03-Aug-99			
7						
881		CO2	0	0.00	0	0.00
882		H2O	5	1.11	2	1.76
883		N2	344	76.15	79	77.89
884		O2	103	22.75	21	20.34
885		---	---	---	---	---
886		Total	451	100.00	102	100.00
887						
888						
889		Liquid Phase	lb/hr	wt %	gpm	Vol %
890		VOC's	0	0.00	0.00	0.00
891		SVOC's	0	0.00	0.00	0.00
892		H2O	38	100.00	0.08	100.00
893		---	---	---	---	---
894		Total	38	100.00	0.08	100.00
895						
896						
897						
898						
899		Air Polution Control System Gas Flow Summary - Stages 2 & 3				
900						
901			lb/hr	scfm	Deg F	acfm
902		Processor Exit Gas (Stage 2)	6,473	2,278	250	3,063
903		Desorber Exit Gas (Stage 3)	2,897	1,016	450	1,751
904		Combined Exit Gas (Stages 2 & 3)	9,370	3,295	312	4,815
905		Water Cooled Condenser Exit Gas	489	115	125	128
906		Refrigerated Condenser Exit Gas	451	102	60	100
907						
908						
909						
910		Condensate Mixture Balance Stages 2 & 3				
911			Cond #1	Cond #2	Total	Wt %
912			(lb/hr)	(lb/hr)	(lb/hr)	
913		Organics	10.0	0.0	10.0	0.11
914		Water	8870.8	38.0	8908.8	99.89
915		---	---	---	---	---
916		Total	8880.8	38.0	8918.8	100.00
917						
918						
919			Cond #1	Cond #2	Total	Vol %
920			(gpm)	(gpm)	(gpm)	
921		Organics	0.0	0.0	0.0	0.13
922		Water	17.7	0.1	17.8	99.87

	A	C	D	E	F	G
1		LT3-HT Process Calcs				
2						
3		Client:	GE - Pittsfield			
4		Case:	Preliminary Calcs			
5		Equipment:	Q2424 + HT			
6		Date	03-Aug-99			
7						
923		---	---	---	---	---
924		Total	17.7	0.1	17.8	100.00
925						
926						
927		**Condensate Mixture Heat Balance - Stages 2 &3**				
928						
929		Heat from Condensate #1				
930		Organics	292	Btu/hr		
931		Water	487,894	Btu/hr		
932		Heat from Condensate #2				
933		Organics	0	Btu/hr		
934		Water	(201)	Btu/hr		
935		---	---	---		
936		Total Heat from Condensate	487,984	Btu/hr		
937						
938		Temperature of Combined Condensate		125	Deg F	
939						
940						

IONICS

RCC Resources Conservation Company

7401

3006 Northup Way
Bellevue, WA 98004-1407
U.S.A.

Tel. 425 828-2400
Fax. 425 828-0526

A Division of Ionics, Incorporated

August 17, 1999

Ms. Meg Sullivan
RF Weston
1 Wall Street
Manchester, New Hampshire 03101

Subject: B.E.S.T.® Solvent Extraction Treatment System Budgetary Cost Information

Dear Ms. Sullivan:

RCC is pleased to submit this budgetary cost estimate for full-scale remediation of PCB-contaminated sediment and river bank soil at the site in Massachusetts that RF Weston is investigating. As I discussed with you, the B.E.S.T. Process is uniquely suited to treating high water content PCB sediments and soils and the large inventory makes it economically attractive. In fact, the B.E.S.T. Process was rated number one for treating PCB sediments by Research Triangle Institute in North Carolina.

Based on the site characterization information you provided, the full-scale treatment cost for remediation of 200,000 tons of the contaminated sediment and soil will be approximately $8 million for capital equipment and $50 per ton for operating costs, including labor, utilities and reagents. In addition, mobilization/demobilization costs are estimated at $700,000.

The treatment system will have a capacity of 300 to 400 yards per day. The above costs assumes that the contaminated soil will be delivered to RCC's extractor/dryer vessels and that the B.E.S.T. treated solids and water and PCB concentrate streams will be discharged to handling systems provided by others. Permitting requirements have not been included in these costs. RCC would require bench scale testing of average and hot spot sediment and river bank soil before formalizing this quotation. RCC has an existing pilot unit but employs it only upon client request due to the large expense for little information gained over and above bench testing.

If you require further information, please call me at (206) 828-2400 or fax me at (206) 828-4143. We look forward to working with you on this project and any other applications you may have for the B.E.S.T. process.

Sincerely,

RESOURCES CONSERVATION COMPANY

James Nowak

James Nowak
Process Engineer
B.E.S.T. Sales Manager

APPENDIX C

ARARS TABLES

Table C-1

Chemical-Specific ARARs

Regulation	Citation	Criterion/Standard	Applicability/Appropriateness	Actions to be Taken to Attain ARARs
Federal ARARs				
Clean Water Act, Ambient Water Quality Criteria	33 USC 1314 40 CFR 131.36(b)(1) 63 Fed. Reg. 68359	National recommended criteria for surface water quality. PCB Criteria: For protection of freshwater aquatic life due to chronic exposure: 0.014 ppb For protection of human health from consumption of water and organisms: 0.00017 ppb Various numerical criteria for other constituents.	Relevant and appropriate for in-stream evaluation.	Removal of contaminated banks and sediments, together with the Removal Action for ½-Mile Reach and source control and floodplain soil removal performed pursuant to the Removal Actions Outside the River, should mitigate any existing PCB AWQC exceedances and reduce any PCB surface water contamination.
State ARARs				
Mass. Water Quality Standards	314 CMR 3.10(3) 314 CMR 4.05(5)(e)	Establishes federal water quality criteria as allowable water quality concentrations.	Relevant and appropriate for in-stream evaluation.	See above discussion of federal water quality criteria.

Table C-1

Chemical-Specific ARARs
(Continued)

Regulation	Citation	Criterion/Standard	Applicability/Appropriateness	Actions to be Taken to Attain ARARs
Guidances Considered				
Cancer Slope Factors (CSFs)	---	Guidance values used to evaluate the potential carcinogenic hazard caused by exposure to contaminants.	To be considered.	EPA considered this guidance in the development of this Removal Action.
Reference Doses (RfDs)	---	Guidance values used to evaluate the potential noncarcinogenic hazard caused by exposure to contaminants.	To be considered.	EPA considered this guidance in the development of this Removal Action.
PCBs: Cancer Dose - Response Assessment and Application to Environmental Mixtures	EPA/600/P-96/001F (September 1996)	Guidance regarding EPA's reassessment of the carcinogenicity of PCBs. It includes revised cancer slope factors for PCBs based upon the exposure pathway.	To be considered.	EPA considered this guidance in the development of this Removal Action.

Table C-2

Action-Specific ARARs

Regulation	Citation	Criterion/Standard	Applicability/Appropriateness	Actions to be Taken to Attain ARARs
A. Excavation of Bank Soils and River Sediments (including river diversion to re-route river) and Covering/Restoration of Excavated Areas				
Federal ARARs				
TSCA Regulations re PCB Remediation Waste	40 CFR 761.61(c)	Establishes cleanup options for PCB remediation waste, including PCB-contaminated soils and sediments. Options include risk-based approval by U.S. EPA. Risk-based approval option must demonstrate that cleanup plan will not pose an unreasonable risk of injury to health or the environment.	Applicable.	Will be attained. The EE/CA work will not pose an unreasonable risk of injury to health or the environment.
TSCA Regulations re Decontamination	40 CFR 761.79	Establishes decontamination standards and procedures for removing PCBs from non-porous surfaces.	Applicable to decontamination of equipment and sheetpiling used in excavation and restoration activities.	Will be attained.

Table C-2

Action-Specific ARARs
(Continued)

Regulation	Citation	Criterion/Standard	Applicability/Appropriateness	Actions to be Taken to Attain ARARs
A. Excavation of Bank Soils and River Sediments (including river diversion to re-route river) and Covering/Restoration of Excavated Areas (cont'd)				
Federal ARARs (cont'd)				
RCRA Hazardous Waste Regulations (Identification and Listing of Hazardous Wastes; Toxicity Characteristics)	40 CFR 261.24	Identifies concentration of contamination which, if present, make a waste hazardous due to toxicity. The analytical test set forth in Appendix II of 40 CFR part 261 is referred to as the Toxicity Characteristic Leaching Procedures.	Relevant and Appropriate.	Will be attained. After application of a conservative screening test, if exceedances are suspected, TCLP will be used to determine whether soils and sediments are characteristic hazardous waste. Soils that exceed allowable concentrations will either be placed in the appropriate On-Plant Consolidation Area (e.g., Building 71) or sent to an appropriate off-site disposal facility. Soils below allowable concentrations, either through the screening tool or TCLP testing, will either be placed in the Hill 78 or Building 71 Consolidation Areas or sent to an appropriate off-site facility.

Table C-2

Action-Specific ARARs
(Continued)

Regulation	Citation	Criterion/Standard	Applicability/Appropriateness	Actions to be Taken to Attain ARARs
A. Excavation of Bank Soils and River Sediments (including river diversion to re-route river) and Covering/Restoration of Excavated Areas (cont'd)				
Federal ARARs (cont'd)				
Clean Water Act NPDES Regulations (Stormwater Discharges)	40 CFR 122.26(c)(1) (ii)(C) 40 CFR 122.44(k) 40 CFR 125.100-.104	Best management practices to control pollutants in stormwater discharges during construction activities.	Applicable.	Best management practices for erosion and sedimentation control will be adopted to minimize the potential for rainfall or flood-induced migration of soils and sediments from disturbed areas.
State ARARs				
Mass. Air Pollution Control Requirements	310 CMR 7.09	Prohibition against creating condition of air pollution in connection with dust-generating activity.	Applicable.	Will be attained. Air monitoring for particulates will be conducted and any exceedances will be addressed.

Table C-2

Action-Specific ARARs
(Continued)

Regulation	Citation	Criterion/Standard	Applicability/Appropriateness	Actions to be Taken to Attain ARARs
B. Discharge of Treated Waters to Housatonic River				
Federal ARARs				
Clean Water Act, NPDES Regulations	33 USC 1342 40 CFR 122, esp. 122.44(a), (e) 40 CFR 125.1-125.3	Best Available Technology (BAT) effluent limits for toxic and non-conventional pollutants; Best Conventional Technology (BCT) limits for conventional pollutants; water-quality based effluent limitations. Discharges in accordance with instructions of On-Scene Coordinator acting pursuant to NCP are exempt from NPDES permit requirements.	Applicable to point source discharges of treated waters to Housatonic River.	Will be attained. The discharge of treated waters will either be from a portable treatment plant, and will meet emergency limits identical to those established for the Building 68 removal action (0.5 ppb PCBs), or will be from GE's existing Groundwater Treatment facility, in which case discharges will meet GE's NPDES permit limits.
	40 CFR 125.100-.104	Best management practices to prevent release of toxics to surface water from ancillary areas or spills.	Same as above.	Same as above.

Table C-2

Action-Specific ARARs
(Continued)

Regulation	Citation	Criterion/Standard	Applicability/Appropriateness	Actions to be Taken to Attain ARARs
B. Discharge of Treated Waters to Housatonic River (cont'd)				
Federal ARARs (cont'd)				
TSCA Regulations	40 CFR 761.50(a)(3)	Prohibits discharge of water containing PCBs to navigable waters unless PCB concentration is less than approximately 3 ppb or in accordance with discharge limits of NPDES permit.	Relevant and Appropriate to discharge of treated waters to Housatonic River.	Will be attained. See discussion of federal Clean Water Act NPDES regulations above.
State ARARS				
Mass. Clean Water Act - Discharge Regulations and Water Quality Standards	314 CMR 3.10 314 CMR 3.19 314 CMR 4.04 (1) 314 CMR 4.05(3)(b) 314 CMR 4.05(5)	Effluent limitations and other conditions for point source discharges; state water quality standards.	Applicable to point source discharges of treated waters to Housatonic River.	For effluent discharges, see discussion of federal Clean Water Act NPDES regulations above. For in-stream attainment, see Table C-1.

Table C-2

Action-Specific ARARs
(Continued)

Regulation	Citation	Criterion/Standard	Applicability/Appropriateness	Actions to be Taken to Attain ARARs
C. Temporary On-Site Storage/Accumulation of Excavated Sediments and Soils and Temporary On-Site Storage/Accumulation of Free Product, Drums, and Equipment that Will be Disposed of Off-Site.				
Federal ARARs				
TSCA Regulations (Storage for Disposal)	40 CFR 761.61(c) 40 CFR 761.65	Provides for risk-based approval to store PCB-remediation waste based upon demonstration that storage plan will not pose an unreasonable risk of injury to health or the environment.	Applicable.	Will be attained. Temporary storage areas will be lined with synthetic material and stored material will be covered by impermeable material. Temporary storage requirements for marking and inspections will be met.
TSCA Regulations (PCB Marking Requirements)	40 CFR 761.40	Requirements regarding the marking of PCB containers and PCB storage areas.	Applicable.	Will be attained.

Table C-2

Action-Specific ARARs
(Continued)

Regulation	Citation	Criterion/Standard	Applicability/Appropriateness	Actions to be Taken to Attain ARARs
C. Temporary On-Site Storage/Accumulation of Excavated Sediments and Soils and Temporary On-Site Storage/Accumulation of Free Product, Drums, and Equipment that Will be Disposed of Off-Site (cont'd)				
Federal ARARs (cont'd)				
RCRA Hazardous Waste Regulations (Storage of Hazardous Waste)	40 CFR Part 264, Subparts I and J 40 CFR 262.34(a).	Subparts I and J of Part 264 identify design, operating, monitoring, closure, and post-closure care requirements for long-term storage of RCRA hazardous waste in containers and tank systems, respectively. However, Section 262.34(a) allows accumulation of RCRA hazardous wastes for up to 90 days in containers or tanks provided generator complies with requirements of Subparts I and J of Part 265.	Applicable.	Will be attained. Any free product, drums, or contaminated equipment will be managed and stored in accordance with the substantive requirements of the cited regulations prior to being sent off-site for disposal.

Table C-2

Action-Specific ARARs
(Continued)

Regulation	Citation	Criterion/Standard	Applicability/Appropriateness	Actions to be Taken to Attain ARARs
C. Temporary On-Site Storage/Accumulation of Excavated Sediments and Soils and Temporary On-Site Storage/Accumulation of Free Product, Drums, and Equipment that Will be Disposed of Off-Site (cont'd)				
State ARARs				
Mass. Hazardous Waste Regulations (Storage of Hazardous Waste)	310 CMR 30.680, 30.690 310 CMR 30.340	Sections 30.680 and 30.690 identify requirements for long-term storage of RCRA hazardous waste in containers and tank systems similar to federal RCRA storage requirements identified above. Section 30.340 allows on-site accumulation of hazardous waste for up to 90 days and is also similar to federal RCRA storage requirements identified above.	Applicable.	See discussion of federal RCRA Hazardous Waste Regulations above.

Table C-2

Action-Specific ARARs
(Continued)

Regulation	Citation	Criterion/Standard	Applicability/Appropriateness	Actions to be Taken to Attain ARARs
D. Permanent On-Site Consolidation of Excavated Sediments and Soils				
ARARs are listed in EPA approved Supplemental Addendum (dated September 8, 1999) to GE *Detailed Work Plan for On-Plant Consolidation Areas*.				
E. Treatment at the GE Facility by Thermal Desorption with Off-Site Disposal of All Treated Material				
Federal ARARs				
RCRA Hazardous Waste Regulations, Subpart P (Thermal Treatment)	40 CFR 265.370	Operating standards for thermal treatment units.	Relevant and Appropriate.	Will be attained.
RCRA Hazardous Waste Regulations, Subpart A	40 CFR 264.1(j)	General facility standards, regarding security, inspections, preparedness, and contingency and emergency procedures for remediation waste management sites. (These standards are in lieu of Section 264, Subparts B, C and D.)	Relevant and Appropriate.	Will be attained.
RCRA Hazardous Waste Regulations, Subpart AA (Air Emission Standards for Process Vents)	40 CFR 264.1030	Emission standards for process vents, closed vent systems, and control devices at treatment facilities that treat RCRA wastes that have total organic concentrations of 10 ppm or greater.	Relevant and Appropriate.	Will be attained. The thermal desorption unit will be designed and monitoring will be conducted to comply with this requirement.

Table C-2

Action-Specific ARARs
(Continued)

Regulation	Citation	Criterion/Standard	Applicability/Appropriateness	Actions to be Taken to Attain ARARs
E. Treatment at the GE Facility by Thermal Desorption with Off-Site Disposal of All Treated Material (cont'd)				
Federal ARARs (cont'd)				
RCRA Hazardous Waste Regulations, Subpart BB (Air Emission Standards for Equipment Leaks)	40 CFR 264.1050	Design specifications and monitoring requirements for hazardous waste treatment equipment that contains or contacts hazardous wastes with organic concentrations of at least 10% by weight.	Relevant and Appropriate.	Will be attained. The thermal desorption unit will be designed and monitoring will be conducted to comply with this requirement.
RCRA Hazardous Waste Regulations, Subpart CC (Air Emission Standards for Tanks, Surface Impoundments, and Containers)	40 CFR 264.1080	Establishes air emission standards for treatment units that treat hazardous waste above certain threshold concentrations.	Relevant and Appropriate.	Will be attained. The thermal desorption unit will be designed and monitoring will be conducted to comply with this requirement.
Clean Air Act, National Emissions Standards for Hazardous Air Pollutants (NESHAPS)	40 CFR Part 63	NESHAPS are national emissions standards for specific hazardous air pollutants, including PCBs, from listed source categories. Promulgation of emission standards for site remediation sources is scheduled for 15 November 2000. (64 Fed. Reg. 63031)	To Be Considered.	The emission standards for site remediation sources will be considered if promulgated prior to the design or selection of the treatment unit.

Table C-2

Action-Specific ARARs
(Continued)

Regulation	Citation	Criterion/Standard	Applicability/Appropriateness	Actions to be Taken to Attain ARARs
E. Treatment at the GE Facility by Thermal Desorption with Off-Site Disposal of All Treated Material (cont'd)				
State ARARs				
Mass. Ambient Air Quality Standards and Air Pollution Control Regulations	310 CMR 6.00 and 7.00	Establishes ambient air levels for contaminants including PCBs and particulates. Creates air pollution limits for sources of emissions.	Applicable.	Will be attained. Emissions from the thermal desorption treatment unit will comply with the substantive provisions of these regulations. Air monitoring for particulates will be conducted and any exceedances will be addressed.
Mass. Hazardous Waste Management Facility Regulations (General Management Standards)	310 CMR 30.513-30.516 and 30.521-30.524.	Requirements regarding waste analysis, security, inspections, personnel training, contingency plans, and standards for emergency prevention and response.	Relevant and Appropriate.	Will be attained. The substantive provisions of these regulations will be attained to the extent that they are more stringent than the federal RCRA general facility standards described above. (See 40 CFR 264.1(j))
Mass. Hazardous Waste Management Facility Regulations (Ignitable, Reactive, or Incompatible Wastes)	310 CMR 30.560	Various requirements relating to precautions to prevent accidental ignition or reaction of wastes.	Relevant and appropriate.	Will be attained.

Table C-2

Action-Specific ARARs
(Continued)

Regulation	Citation	Criterion/Standard	Applicability/Appropriateness	Actions to be Taken to Attain ARARs
E. Treatment at the GE Facility by Thermal Desorption with Off-Site Disposal of All Treated Material (cont'd)				
State ARARs				
Mass. Hazardous Waste Management Facility Regulations (Storage and Treatment in Tanks)	310 CMR 30.691-30.699	Requirements regarding the treatment and storage of hazardous waste in tanks.	Relevant and Appropriate.	Will be attained. The substantive provisions of these regulations will be attained to the extent that they are more stringent than the federal RCRA Subpart J Tank standards. (See 40 CFR 264.190.) The secondary containment requirements will be complied with to the extent practicable.
Mass. Hazardous Waste Management Facility Regulations (Flood proofing and Location)	310 CMR 30.701(2) and 30.705(4)	Requirements regarding flood proofing and the location of new hazardous waste facilities.	Relevant and Appropriate.	Will be attained to the extent practicable.
E.1 Discharge of Treated Waters from the Thermal Desorption Unit to Housatonic River				
ARARs are listed above in Section B. (Discharge of Treated Waters to Housatonic River.)				
E.2 Storage of Contaminated and Treated Soil and Sediment, Contaminated Treatment Media, and Concentrated Condensate Stream				
ARARs are listed above in Section C. (Temporary On-Site Storage/Accumulation, etc.)				

Table C-2

Action-Specific ARARs
(Continued)

Regulation	Citation	Criterion/Standard	Applicability/Appropriateness	Actions to be Taken to Attain ARARs
F. Treatment at the GE Facility by Solvent Extraction with Off-Site Disposal of All Treated Material				
Federal ARARs				
RCRA Hazardous Waste Regulations, Subpart J (Tanks)	40 CFR 264.190	Requirements relating to the storage and/or treatment of hazardous waste in tanks and tank systems.	Relevant and Appropriate.	Will be attained. The secondary containment requirements will be complied with to the extent practicable.
RCRA Hazardous Waste Regulations, Subpart A	40 CFR 264.1(j)	General facility standards, regarding security, inspections, preparedness, and contingency and emergency procedures for remediation waste management sites. (These standards are in lieu of Section 264, Subparts B, C and D.)	Relevant and Appropriate.	Will be attained.
RCRA Hazardous Waste Regulations, Subpart AA (Air Emission Standards for Process Vents)	40 CFR 264.1030	Emission standards for process vents, closed vent systems, and control devices at treatment facilities that treat RCRA wastes that have total organic concentrations of 10 ppm or greater.	Relevant and Appropriate.	Will be attained. The thermal desorption unit will be designed and monitoring will be conducted to comply with this requirement.

Table C-2

Action-Specific ARARs
(Continued)

Regulation	Citation	Criterion/Standard	Applicability/Appropriateness	Actions to be Taken to Attain ARARs
F. Treatment at the GE Facility by Solvent Extraction with Off-Site Disposal of All Treated Material (cont'd)				
Federal ARARs (cont'd)				
RCRA Hazardous Waste Regulations, Subpart BB (Air Emission Standards for Equipment Leaks)	40 CFR 264.1050	Design specifications and monitoring requirements for hazardous waste treatment equipment that contains or contacts hazardous wastes with organic concentrations of at least 10% by weight.	Relevant and Appropriate.	Will be attained. The thermal desorption unit will be designed and monitoring will be conducted to comply with this requirement.
RCRA Hazardous Waste Regulations, Subpart CC (Air Emission Standards for Tanks, Surface Impoundments, and Containers)	40 CFR 264.1080	Establishes air emission standards for treatment units that treat hazardous waste above certain threshold concentrations.	Relevant and Appropriate.	Will be attained. The thermal desorption unit will be designed and monitoring will be conducted to comply with this requirement.
State ARARs				
Mass. Hazardous Waste Management Facility Regulations (General Management Standards)	310 CMR 30.513-30.516 and 30.521-30.524.	Requirements regarding waste analysis, security, inspections, personnel training, contingency plans, and standards for emergency prevention and response.	Relevant and Appropriate.	Will be attained. The substantive provisions of these regulations will be attained to the extent that they are more stringent than the federal RCRA general facility standards described above. (See 40 CFR 264.1(j))

Table C-2

Action-Specific ARARs
(Continued)

Regulation	Citation	Criterion/Standard	Applicability/Appropriateness	Actions to be Taken to Attain ARARs
F. Treatment at the GE Facility by Solvent Extraction with Off-Site Disposal of All Treated Material (cont'd)				
State ARARs (cont'd)				
Mass. Hazardous Waste Management Facility Regulations (Ignitable, Reactive, or Incompatible Wastes)	310 CMR 30.560	Various requirements relating to precautions to prevent accidental ignition or reaction of wastes.	Relevant and Appropriate.	Will be attained.
Mass. Hazardous Waste Management Facility Regulations (Storage and Treatment in Tanks)	310 CMR 30.691-30.699	Requirements regarding the treatment and storage of hazardous waste in tanks.	Relevant and Appropriate.	Will be attained. The substantive provisions of these regulations will be attained to the extent that they are more stringent than the federal RCRA Subpart J Tank standards. (See 40 CFR 264.190.) The secondary containment requirements will be complied with to the extent practicable.
Mass. Hazardous Waste Management Facility Regulations (Flood proofing and Location)	310.CMR 30.701(20 and 30.705(4)	Requirements regarding flood proofing and the location of new hazardous waste facilities.	Relevant and Appropriate.	Will be attained to the extent practicable.

Table C-2

Action-Specific ARARs
(Continued)

Regulation	Citation	Criterion/Standard	Applicability/Appropriateness	Actions to be Taken to Attain ARARs
F.1 Discharge of Treated Waters from the Solvent Extraction Unit to Housatonic River				
ARARs are listed above in Section B. (Discharge of Treated Waters to Housatonic River.)				
F.2 Storage of Contaminated and Treated Soil and Sediment, Contaminated Treatment Media, and Concentrated Condensate Stream				
ARARs are listed above in Section C. (Temporary On-Site Storage/Accumulation, etc.)				
G. Other				
Federal ARARs				
TSCA PCB Spill Cleanup Policy	40 CFR 761, Subpart G (§761.120 et seq.)	Policy used to determine adequacy of cleanup of spills resulting from the release of materials containing PCBs at concentration of 50 ppm or greater.	TBC for PCB spills or leakage from cleanup.	This cleanup policy will be considered for any new PCB spills that occur during the work.

Table C-3

Location-Specific ARARs

Regulation	Citation	Requirements	Applicability/Appropriateness	Actions to be Taken to Attain ARARs
Federal ARARs				
Fish & Wildlife Coordination Act Requirements	16 USC 662, 663 40 CFR 6.302(g)	Requires consultation with appropriate agencies to protect fish and wildlife when federal actions may alter waterways. Must develop measures to prevent and mitigate potential loss to the maximum extent possible.	Applicable.	Will be attained. Appropriate agencies will be consulted regarding potential mitigation measures. In-stream work includes restoration of river and aquatic habitat and precautions against erosion and scour of river sediments and bank soils.
Preservation of Historical and Archaeological Data Act and National Historic Preservation Act	16 USC 469 et seq. 36 CFR Part 65 16 USC 470 et seq. 36 CFR Part 800	Establishes requirements for the recovery and preservation of historical and archaeological data. Also requires measures to minimize harm to historic resources.	Potentially applicable.	No archaeological or historic resources are believed to exist in the EE/CA Reach. This assumption will be verified prior to commencement of design. If historic or archaeological data are discovered, such objects will be recovered in accordance with the substantive requirements of the cited regulations, to the extent practicable. If historic properties are identified, mitigation measures will be taken to minimize harm to historic properties, to the extent practicable.

Table C-3

Location-Specific ARARs
(Continued)

Regulation	Citation	Requirements	Applicability/Appropriateness	Actions to be Taken to Attain ARARs
Federal ARARs (cont'd)				
Endangered Species Act	16 USC 1531 et seq. 50 CFR Part 402 50 CFR Part 17.11-17.12 40 CFR 6.302(h)	This Act requires action to avoid jeopardizing the continued existence of listed endangered or threatened species or destruction or adverse modification of critical habitat. Also must consult with Department of Interior.	Potentially applicable.	Threatened or endangered species are not believed to exist in the EE/CA Reach. This assumption will be verified prior to commencement of design. If endangered species are present, substantive provisions of the cited regulation will be complied with, to the extent practicable.
Executive Order for Wetlands Protection	Exec. Order 11990 (1977) 40 CFR 6.302(a) 40 CFR Part 6, App. A	Federal agencies are required to avoid adversely impacting wetlands whenever possible, minimize wetland destruction, and preserve the value of wetlands.	Applicable.	Will be attained. There is no practical alternative to work in wetlands with less adverse impact and all practicable measures will be taken to minimize and mitigate any adverse impacts. Erosion and sedimentation control measures will be adopted during removal and restoration activities. The riverbank, river, and associated habitat will be restored and enhanced.

Table C-3

Location-Specific ARARs
(Continued)

Regulation	Citation	Requirements	Applicability/Appropriateness	Actions to be Taken to Attain ARARs
Federal ARARs (cont'd)				
Executive Order for Floodplain Management	Exec. Order 11988 (1977) 40 CFR Part 6, App. A. 40 CFR 6.302(b)	Federal agencies are required to reduce the risk of flood loss, minimize impact of floods, and restore and preserve the natural and beneficial values of floodplains.	Applicable.	Will be attained. There is no practical alternative to work in floodplains with less adverse impact and all practicable measures will be taken to minimize and mitigate any adverse impacts. Erosion and sedimentation control measures will be adopted during removal and restoration activities. The riverbank, river, and associated habitat will be restored and enhanced.
Clean Water Act § 404 Requirements	33 USC 1344 33 CFR Parts 320-323 40 CFR 230	For discharge of dredged or fill material into water bodies or wetlands, there must be no practical alternative with less adverse impact on aquatic ecosystem; discharge cannot cause or contribute to violation of state water quality standard or toxic effluent standard or jeopardize threatened or endangered (T&E) species; discharge cannot significantly degrade waters of U.S.; must take practicable steps to minimize and mitigate adverse impacts; must evaluate impacts on flood level, flood velocity, and flood storage capacity.	Applicable.	Will be attained in part because (a) there is no practical alternative with less adverse impact; (b) all practical measures will be taken to minimize and mitigate any adverse impacts from the work; (c) there is no likely impact on T&E species; (d) actions will be taken to minimize impact of hydrologic changes during the work; (e) after completion of the work, there will be no significant net loss of flood storage capacity, and no significant net increase in flood stage or velocities; and (f) river and riverbanks will be restored and habitat will be improved.

Table C-3

Location-Specific ARARs
(Continued)

Regulation	Citation	Requirements	Applicability/Appropriateness	Actions to be Taken to Attain ARARs
State ARARs				
Mass. Clean Water Act - Water Quality Certification Regulations	314 CMR 9.06	For discharge of dredged or fill material, there must be no practicable alternative with less adverse impact on aquatic ecosystem; must take practicable steps to minimize adverse impacts on wetlands or land under water; stormwater discharges must be controlled with BMPs; must be no substantial adverse impact to physical, chemical, or biological integrity of surface waters.	Relevant and Appropriate.	Will be attained because (a) there is no practicable alternative with less adverse impact on the aquatic ecosystem; (b) all practical measures will be taken to minimize adverse impacts on wetlands and land under water; (c) stormwater discharges will be controlled through BMPs; and (d) there will be no substantial long-term adverse impacts to integrity of river waters.
	314 CMR 9.07	Hydraulic or mechanical dredging allowed; must avoid fisheries impacts.	Relevant and Appropriate.	Will be attained. There are no significant fisheries in area at present and aquatic habitat will be restored.
Mass. Wetlands Protection Regulations Regarding Endangered Species	310 CMR 10.59	Actions must be conducted in a manner that minimizes the impact on Massachusetts listed rare, threatened, or endangered species, and species listed by the Massachusetts Natural Heritage Program.	Potentially Applicable.	Threatened or endangered species are not believed to exist in the EE/CA Reach. This assumption will be verified prior to commencement of design. If endangered species are present, substantive provisions of the cited regulation will be complied with, to the extent practicable.

Table C-3

Location-Specific ARARs
(Continued)

Regulation	Citation	Requirements	Applicability/Appropriateness	Actions to be Taken to Attain ARARs
State ARARs (cont'd)				
Mass. Historical Commission Act and Regulations	MGL c. 9 § 27C 950 CMR 71.07	Adoption of prudent and feasible measures to eliminate, minimize, and mitigate impacts on historic properties.	Potentially Applicable.	No archaeological or historic resources are believed to exist in the EE/CA Reach. This assumption will be verified prior to commencement of design. If historic or archaeological data are discovered, such objects will be recovered in accordance with the substantive requirements of the cited regulations, to the extent practicable. Mitigation measures will be taken to minimize harm to historic properties, to the extent practicable.
Mass. Wetlands Protection Act and Regulations	MGL c. 131 § 40 310 CMR 10.00	Regulations restrict dredging, filling, altering, or polluting inland wetland resource areas and impose performance standards for work in such areas. Protected resource areas include: 10.54 (Bank); 10.55 (Bordering Vegetated Wetlands); 10.56 (Land under Water); 10.57 (Bordering Land subject to Flooding); and 10.58 (Riverfront Area).	Applicable.	Will be attained because (a) there is no practicable alternative that would be less damaging to resource areas; (b) all practical measures will be taken to minimize adverse impacts on wetlands; (c) stormwater discharges will be controlled through best management practices (BMPs); (d) actions will be taken to minimize impact of hydrologic changes during the work to the extent practicable; (e) after completion of the work, there will be no significant net loss of flood storage capacity and no significant net increase in flood storage or velocities; and (f) disturbed vegetation, river, and riverbank will be restored.