FIGURE 4

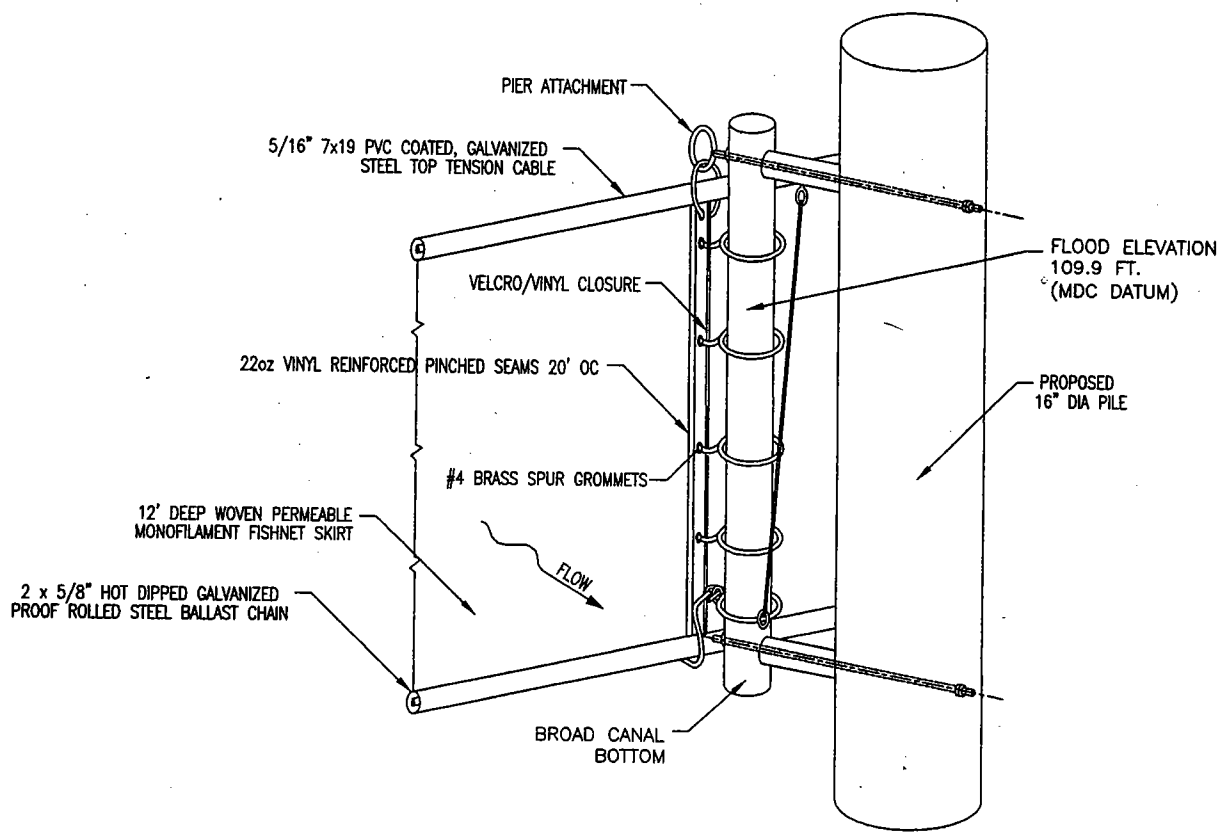

KENDALL SQUARE STATION
EQUIPMENT UPGRADE PROJECT

TRANSVERSE CROSS-SECTION OF FISH NET BARRIER KENDALL SQUARE STATION

CAMBRIDGE, MASSACHUSETTS

24677/KENDALL/NPDES/FISHNET ACROSS