1093

2004 JUN -4 P 1:08

NPDES Phase II
Small MS4 General Permit
Annual Report

Municipality:	**Town of Blackstone**
EPA NPDES Permit Number:	**MAR041093**
DEP Tracking Number	**W-036393**
Annual Report Number:	**Year 1**
Report Period:	**March 2003 through May 2004**

Part I. General Information

Contact Person: Wayne E. Bates, PhD, PE Title: Town Engineer

Telephone #: 508-883-9331 Email: wbates@townofblackstone.org

Certification:

I certify under penalty of law that this document and all attachments were prepared under my direction or supervision in accordance with a system designed to assure that qualified personnel properly gather and evaluate the information submitted. Based on my inquiry of the person or persons who manage the system, or those persons directly responsible for gathering the information, the information submitted is, to the best of my knowledge and belief, true, accurate, and complete. I am aware that there are significant penalties for submitting false information, including the possibility of fine and imprisonment for knowing violations.

Signature:
Printed Name: Raymond W. Houle, Jr.
Title: Town Administrator
Date: June 1, 2004

Part II. Self-Assessment

The Town of Blackstone has completed the required self-assessment and have determined that our municipality is in compliance with all permit conditions, exept for the following provisions:

Part II.F. Failed to submit annual report on or before May 1, 2004. Submitted on June 1, 2004.

Part III. Summary of Minimum Control Measures

See attached tables.

Part IV. Summary of Information Collected and Analyzed

- Existing catch basins and storm manholes have been located using GPS equipment and mapped within town-wide drainage basemap.
- Several catch basins have been cleaned and inspected.

Part V. Program Outputs & Accomplishments (OPTIONAL)

Storm Water Management Plan
Year 1 – Annual Update
Part III - Summary of Minimum Control Measures

Table 1 - Public Education and Outreach

BMP-ID	BMP - Description	Responsible Person	Measurable Goal(s)	Progress on Goal(s) – Year 1	Planned Activities Year 2
1-1	Provide Educational Materials to Residents	Town Engineer	Post information annually in the Blackstone Enlightener and through informational pamphlets (for example, see BMP 2-2)	Forwarded EPA construction activity poster to Planning Board. Provided website link on town website about construction activities. Posted construction activity notice on local cable access channel	Post additional information on website. BMR to produce educational videos to air on local access cable channel.
1-2	Evaluate Potential for Classroom Education	BMR – Science Department	1. Meet with BMR Science Department 2. Evaluate development of curriculum for HS students	Met with BMR Science Dept. Through a grant from a local power plant (ANP) BMR has purchased several items to conduct classroom exercises in stormwater education. BMR has reviewed the curriculum to include stormwater education	Produce videos for general public and for elementary age students. Prepare informational brochure to mailed to residents.

Storm Water Management Plan
Year 1 – Annual Update
Part III - Summary of Minimum Control Measures

Table 2 - Public Participation and Involvement

BMP-ID	BMP	Responsible Person	Measurable Goal(s)	Progress on Goal(s) – Year 1	Planned Activities Year 2
2-1	Request Feed-back on the Plan from Town Officials	Town Engineer	Send letter requesting input on the Storm Water Management Plan to Town boards and officials	Sent memo to Zoning Board and Planning Board	Follow-up with each board to discuss stormwater issues
2-2	Informational Questionnaire to Residents	Town Engineer	Send pamphlet/questionnaire to residents requesting information about storm drain systems (e.g., if they are aware of pipes in their yard, foaming, discoloration, etc)	Discussed with BMR Science Department about preparing pamphlet.	
2-2	*Revised*	*BMR Science Department*			*HS science class to prepare pamphlet in Fall/Winter 2004/2005*
2-3	Status Updates to Town Officials	Town Engineer	Present status update to municipal boards on annual basis	Provided update on March 11, 2004	Provide update in March 2005

Table 3 - Illicit Discharge Detection and Elimination

BMP-ID	BMP	Responsible Person	Measurable Goal(s)	Progress on Goal(s) – Year 1	Planned Activities Year 2
3-1	Storm Sewer System - Existing Conditions	Town Engineer	Prepare base maps	Purchased GPS equipment and hired HS intern to locate visible CBs and MHs. Structures have been loaded into a stormwater base map using AutoCAD 2004.	Charles River Water Shed Assoc. will be locating major outfalls within the community. Engineering will plot outfalls in base map.
3-2	Request information from Town residents about illicit discharges	Town Engineer	See BMP 2-2		
3-2	*Revised*	*BMR Science Department*	*See BMP 2-2 (revised)*		*See BMP 2-2 (revised)*
3-3	Storm Sewer Inspections	Town Engineer	1. Develop inspection checklist 2. Prioritize inspections 3. Create database for existing conditions 4. Identify source(s) of illicit discharge(s)	Created Catch Basin Inspection Form for use by DPW employees when cleaning CBs	Continue to clean and inspect CBs
3-4	Develop Improvement Program	Town Engineer	1. Prepare improvement plan 2. Evaluate repair costs 3. Prioritize upgrades based on	No activity planned until Permit Year 3	No activity planned until Permit Year 3

			needs and costs		
3-5	Capital Improvement Plan	Town Engineer	1. Prepare multi-year capital improvement plan 2. Present plan to Capital Outlay Committee	No activity planned until Permit Year 4. However, several storm water improvements are being included in on-going water and sewer construction projects. For example, several CB inlets without sumps are scheduled to be replaced with full sump CBs during the Millerville sewer project.	No activity planned until Permit Year 4
3-6	Implement Capital Improvement Plan	Town Engineer/DPW	Implement improvement program to the extent allowable within capital and operational means	No activity planned until Permit Years 4/5	No activity planned until Permit Years 4/5

Table 4 – Construction Site Runoff Control

BMP-ID	BMP	Responsible Person	Measurable Goal(s)	Progress on Goal(s) – Year 1	Planned Activities Year 2
4-1	Site Plan Review	Town Engineer/Planning Board	Meet with Planning Board to discuss storm water requirements	Memo sent to Planning Board and information placed on town website	Follow-up with Planning Board
4-2	Construction Storm Water Ordinance	Planning Board	Evaluate opportunities to modify planning by-laws to include storm water ordinance	No progress	Discuss with Planning Board
4-3	Enforcement	Planning Board	Evaluate inspection and enforcement opportunities	No progress	Discuss with Planning Board

Storm Water Management Plan
Year 1 – Annual Update
Part III - Summary of Minimum Control Measures

Table 5 – Post-Construction Runoff Control

BMP-ID	BMP	Responsible Person	Measurable Goal(s)	Progress on Goal(s) – Year 1	Planned Activities Year 2
5-1	Ordinance – Post-Construction	Planning Board/DPW/Town Engineer	Evaluate opportunities to modify planning regulations requiring contractors to guarantee work	No progress	Discuss with Planning Board
5-2	Enforcement	Planning Board/DPW/Town Engineer	Evaluate inspection and enforcement opportunities	No progress	Discuss with Planning Board

Memorandum

To: Planning Board and Zoning Board

C: Board of Selectmen

From: Wayne Bates

RE: Storm Water Permits for Construction Projects

Date: March 11, 2004

Attached please find information about the EPA storm water regulations as they pertain to construction activities. Please advise applicants that these regulations apply to any project that will disturb one acre or more of land, regardless of whether the Planning Board or Zoning regulations apply.

If applicants have questions about the regulations and their applicability, please provide them with the EPA storm water website address for construction activity, which is as follows:
http://cfpub.epa.gov/npdes/stormwater/cgp.cfm

S:\Engineering\General Correspondence\Internal\Planning Board\M040311_EPA_stormwater.doc

Wayne Bates

From: Wayne Bates
Sent: Thursday, March 11, 2004 3:25 PM
To: Chuck Sullivan

Chuck,
could you put the following messages on our website in an effort to meet certain public education criteria within our storm water permit.

Notice to Developers - Storm Water Permit Requirements
All developers in the Town of Blackstone should be aware that the Environmental Protection Agency has strict regulations regarding storm water generated from construction activities. Please be advised that as of March 10, 2003, any project that disturbs one acre or more of land is required to comply with the EPA storm water requirements. Additional information about this program is available at:
http://cfpub.epa.gov/npdes/stormwater/cgp.cfm

Public Education About Storm Water

Stormwater discharges are generated by runoff from land and impervious areas such as paved streets, parking lots, and building rooftops during rainfall and snow events that often contain pollutants in quantities that could adversely affect water quality. Most stormwater discharges are considered point sources and require coverage by an NPDES permit. The primary method to control stormwater discharges is through the use of best management practices. Information about the EPA storm water program can be found at the EPA website: http://www.epa.gov/NE/npdes/stormwater/

Thanks,
Wayne E. Bates, PhD, PE
Blackstone Town Engineer
15 St. Paul Street
Blackstone, MA 01504

Catch Basin Inspection Form

Street: _____

Date: _____ Inspected by: _____

Cleaned? Yes No
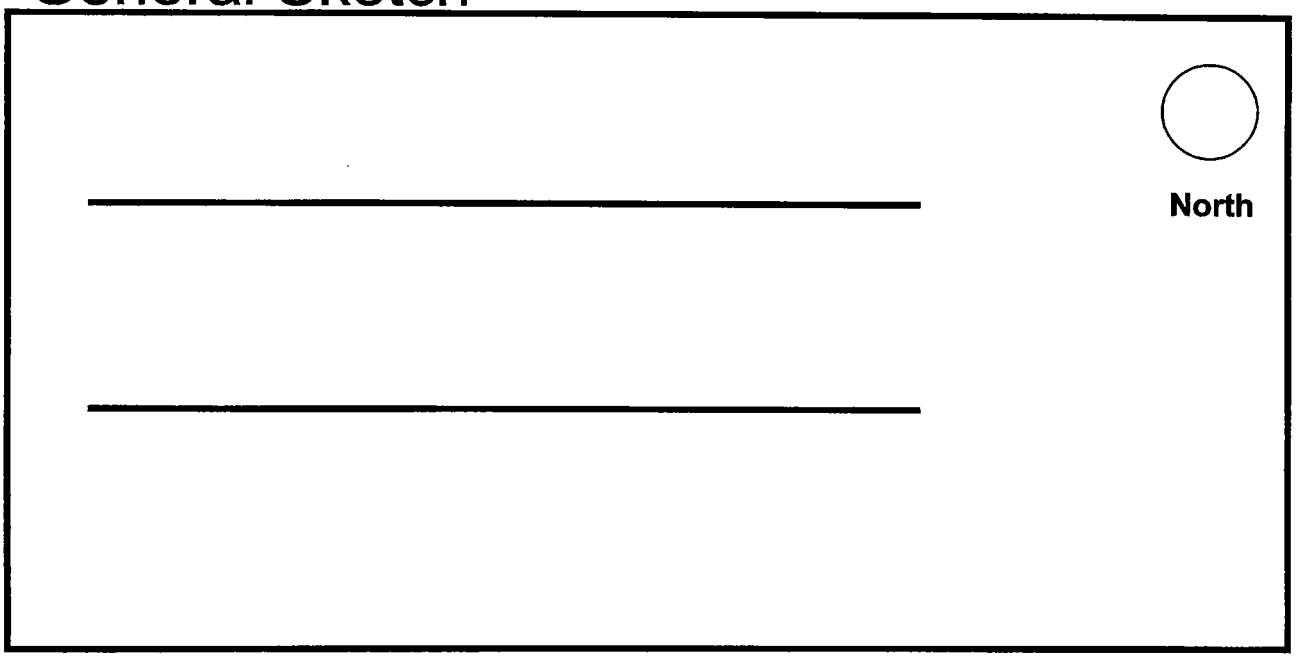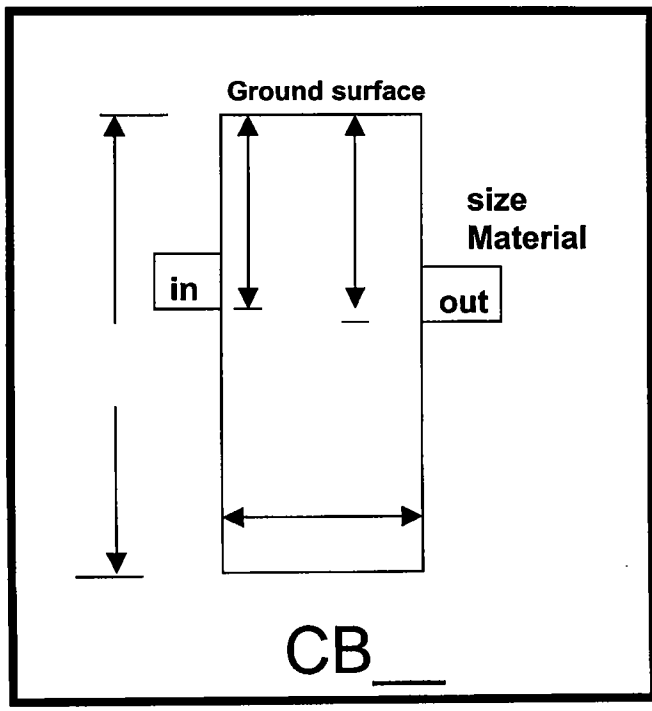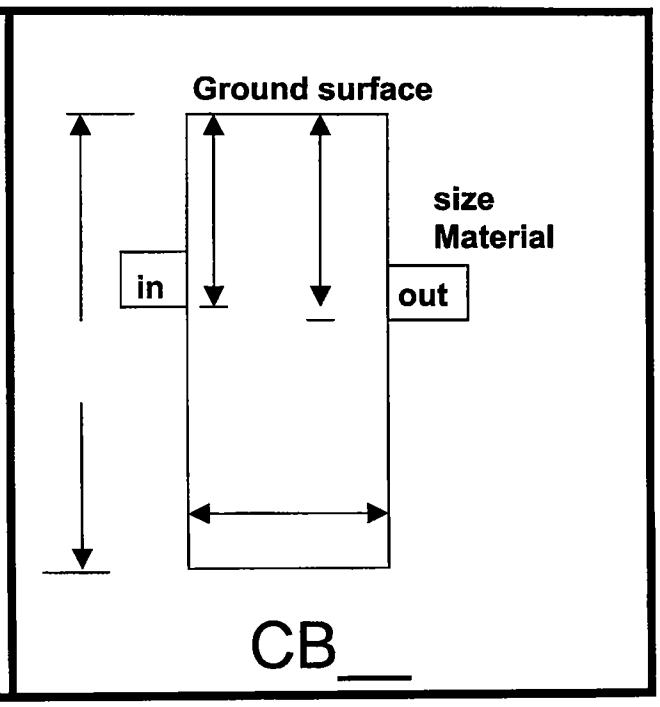
General Sketch