EPA/600/R-03/019
March 2003

Design Manual:

Removal of Arsenic from Drinking Water by Adsorptive Media

Prepared by

Frederick Rubel, Jr., P.E.
Rubel Engineering, Inc.
Tucson, Arizona 85712

Prepared for

Battelle
505 King Avenue
Columbus, Ohio 43281-2693

Under Contract with the U.S. EPA No. 68-C7-0008

Work Assignment Manager

Thomas J. Sorg
Water Supply and Water Resources Division
National Risk Management Research Laboratory
Cincinnati, Ohio 45268

National Risk Management Research Laboratory
Office of Research and Development
U.S. Environmental Protection Agency
Cincinnati, Ohio 4526

Disclaimer

The information in this document has been funded by the United States Environmental Protection Agency (U.S. EPA) under Work Assignment (WA) No. 4-32 of Contract No. 68-C7-0008 to Battelle. It has been subjected to the Agency's peer and administrative reviews and has been approved for publication as an EPA document. Mention of trade names or commercial products does not constitute an endorsement or recommendation for use.

Foreword

The U.S. Environmental Protection Agency is charged by Congress with protecting the Nation's land, air, and water resources. Under a mandate of national environmental laws, the Agency strives to formulate and implement actions leading to a compatible balance between human activities and the ability of natural systems to support and nurture life. To meet this mandate, EPA's research program is providing data and technical support for solving environmental problems today and building a science knowledge base necessary to manage our ecological resources wisely, understand how pollutants affect our health, and prevent or reduce environmental risks in the future.

The National Risk Management Research Laboratory is the Agency's center for investigation of technological and management approaches for preventing and reducing risks from pollution that threatens human health and the environment. The focus of the Laboratory's research program is on methods and their cost-effectiveness for prevention and control of pollution to air, land, water, and subsurface resources; protection of water quality in public water systems; remediation of contaminated sites, sediments and ground water; prevention and control of indoor air pollution; and restoration of ecosystems. NRMRL collaborates with both public and private sector partners to foster technologies that reduce the cost of compliance and to anticipate emerging problems. NRMRL's research provides solutions to environmental problems by: developing and promoting technologies that protect and improve the environment; advancing scientific and engineering information to support regulatory and policy decisions; and providing the technical support and information transfer to ensure implementation of environmental regulations and strategies at the national, state, and community levels.

This publication has been produced as part of the Laboratory's strategic long-term research plan. It is published and made available by EPA's Office of Research and Development to assist the user community and to link researchers with their clients.

Hugh W. McKinnon, Director
National Risk Management Research Laboratory

Abstract

This design manual is an in-depth presentation of the steps required to design and operate a water treatment plant for removal of excess arsenic from drinking water using the adsorptive media process. This treatment process is very reliable, simple and cost-effective. Several adsorptive media products are available in the marketplace that have successfully demonstrated their capability to remove arsenic from drinking water to levels well below the revised MCL, 0.010 mg/L. Other new products continue to be developed. The adsorptive media products are preferential for the removal of arsenic over other competing ions. Therefore, unless a water system requires treatment capability for removal of other suspended or dissolved contaminants, the adsorptive media treatment method merits evaluation.

The adsorptive media process is implemented with operational options which vary with the product selected. For water systems that are primarily concerned with financial feasibility, capital and operating costs, each operational option along with each available adsorptive media product should be evaluated. This design manual provides the methods for competently performing each evaluation. The arsenic removal capacity of some adsorptive media products, such as activated alumina, are very sensitive to the pH of the water passing thru treatment. Others, such as iron-based products, are not. Treatment processes incorporating pH adjustment capability require careful handling and storage of corrosive chemicals (acid and caustic). Some adsorptive media products, such as activated alumina, are capable of being chemically regenerated for repetition of treatment cycles using the same corrosive chemicals as those used for pH adjustment in the treatment process. Regeneration is not recommended for other adsorptive media products. Whether or not pH of water being treated is adjusted, the adsorptive media can be replaced in place of regeneration upon exhaustion of arsenic capacity. This design manual presents the information necessary to design and operate treatment systems for any combination of operational options and for any adsorptive media. It also discusses the capital and operating costs including the many variables which can raise or lower costs for identical treatment systems.

Contents

Abstract iv
Figures viii
Tables ix
Acronyms and Abbreviations x

1.0 Introduction 1
1.1 Purpose and Scope 1
1.2 Background 1
1.3 Arsenic in Water Supplies 2
1.4 Arsenic Speciation 2
1.5 Removal of Arsenic 3

2.0 Arsenic Removal by Adsorptive Media Treatment Methods 5
2.1 Introduction 5
2.2 Granular Adsorptive Media 5
2.2.1 pH Adjustment System 5
2.2.2 Non-pH Adjustment System 6
2.3 Treatment With or Without pH Adjustment 6
2.4 Treatment Media Regeneration vs. Treatment Media Disposal 7
2.5 Manual vs. Automatic Operation 7

3.0 Design of Central Treatment System 9
3.1 Assemble Design Input Data and Information 9
3.2 Conceptual Design 11
3.2.1 Manual Operation 12
3.2.2 Automatic Operation 12
3.3 Preliminary Design 18
3.3.1 Treatment Equipment Preliminary Design 18
3.3.1.1 Treatment Bed and Vessel Design 22
3.3.1.2 Pipe Design 22
3.3.1.3 Instrumentation Design 23
3.3.1.4 Acid Storage and Feed Subsystem 23
3.3.1.5 Caustic Soda Storage and Feed Subsystem 24
3.3.2 Preliminary Treatment Equipment Arrangement 24
3.3.3 Preliminary Cost Estimate 24
3.3.4 Preliminary Design Revisions 25
3.4 Final Design 25
3.4.1 Treatment Equipment Final Design 26
3.4.1.1 Treatment Bed and Vessel Design 26
3.4.1.2 Pipe Design 27
3.4.1.3 Instrument Design 28
3.4.1.4 Acid Storage and Feed Subsystem 28
3.4.1.5 Caustic Soda Storage and Feed System 29
3.4.1.6 Regeneration Wastewater Surge Tank 29
3.4.2 Final Drawings 29
3.4.3 Final Capital Cost Estimate 30
3.4.4 Final Design Revisions 31

4.0 Central Treatment System Capital Cost 33
4.1 Introduction 33

4.2 Discussion of Cost Variables 33
4.2.1 Water Chemistry 35
4.2.2 Climate 35
4.2.3 Seismic Zone 36
4.2.4 Soil Conditions 36
4.2.5 100-Year Flood Plain 36
4.2.6 Existing and Planned (Future) Water System Parameters 36
4.2.6.1 Number and Location of Wells 37
4.2.6.2 Potable Water Storage Facilities 37
4.2.6.3 Distribution and Consumption 37
4.2.7 pH Adjustment of Process Water Included vs. Not Included 37
4.2.8 Regeneration or Replacement of Spent Adsorptive Media 38
4.2.9 Backwash and Regeneration Disposal Concept 38
4.2.10 Chemical Supply Logistics 38
4.2.11 Manual Versus Automatic Operation 38
4.2.12 Financial Considerations 39
4.3 Relative Capital Cost of Arsenic Removal Central Water Treatment Plants Based on Flowrate 39

5.0 Treatment Plant Operation 43
5.1 Introduction 43
5.2 Adsorptive Media Initial Startup 44
5.3 Treatment Process with Spent Treatment Media Regeneration 46
5.3.1 Treatment Mode 46
5.3.2 Backwash Mode 49
5.3.3 Regeneration Mode 49
5.3.4 Neutralization Mode 50
5.4 Treatment Process with Spent Treatment Media Replacement 51
5.4.1 Treatment Mode 51
5.4.2 Media Replacement Mode 51
5.5 Operator Requirements 51
5.6 Laboratory Requirements 51
5.7 Operating Records 52
5.7.1 Plant Log 52
5.7.2 Operation Log 52
5.7.3 Water Analysis Reports 52
5.7.4 Plant Operating Cost Records 52
5.7.5 Correspondence Files 52
5.7.6 Regulatory Agency Reports 52
5.7.7 Miscellaneous Forms 52
5.8 Treatment Plant Maintenance 52
5.9 Equipment Maintenance 52
5.10 Treatment Media Maintenance 54
5.11 Treatment Chemicals Supply 54
5.12 Housekeeping 54

6.0 Central Treatment Plant Operating Cost 55
6.1 Introduction 55
6.2 Discussion of Operating Costs 55
6.2.1 Treatment Chemical Costs 56
6.2.1.1 Acid Cost 56
6.2.1.2 Caustic Cost 58
6.2.2 Operating Labor Costs 59
6.2.3 Utility Cost 60
6.2.4 Replacement Treatment Media Cost 61
6.2.5 Replacement Parts and Miscellaneous Material Costs 62

6.3 Operating Cost Summary 62

7.0 References 63

Appendix A: Summary of Subsystems Including Components 65
Appendix B: Treatment System Design Example 69
Appendix C: Discussion of Acid Consumption Requirements for pH Adjustment of Raw Water 73
Appendix D: Tabulations of Estimated Capital Cost Breakdowns for Arsenic Removal Water Treatment Plants by Means of the Activated Alumina Process at Typical and Ideal Locations 77
Appendix E: Alternative Methods for Removing Media from Very Small System Tanks 83
Appendix F: English to Metric Conversion Table 85

Figures

Figure 3-1. Arsenic Removal Water Treatment Plant Water Analysis Report 10
Figure 3-2. Flow Diagram for Dual Vessel Series Downflow Treatment System Without pH Adjustment, With Replacement of Spent Media 13
Figure 3-3. Flow Diagram for Dual Vessel Series Downflow Treatment System With pH Adjustment, With Replacement of Spent Media 14
Figure 3-4. Flow Diagram for Dual Vessel Series Downflow Treatment System With pH Adjustment, With Regeneration of Spent Media 15
Figure 3-5. Treatment Bed and Vessel Design Calculations 16
Figure 3-6. Treatment System Plan for Adsorptive Media Without Process Water pH Adjustment and With Spent Media Replacement 19
Figure 3-7. Treatment System Plan for Adsorptive Media With Process Water pH Adjustment and Spent Media Replacement 20
Figure 3-8. Treatment System Plan for Adsorptive Media With Process Water pH Adjustment and Spent Media Regeneration 21
Figure 3-9. Treatment Vessels Piping Isometric Adsorptive Media With or Without Process Water pH Adjustment and With Spent Media Replacement 30
Figure 3-10. Treatment Vessels Piping Isometric Adsorptive Media With Process Water pH Adjustment and Spent Media Regeneration 30
Figure 4-1. Capital Cost vs. Flowrate at Typical Locations for Arsenic Removal Water Treatment Plants by Means of the Activated Alumina Process 34
Figure 4-2. Capital Cost vs. Flowrate at Ideal Locations for Arsenic Removal Water Treatment Plants by Means of the Activated Alumina Process 35
Figure 4-3. Code Pressure Vessel Fabricator Quotation for Adsorptive Media Treatment Vessels 40
Figure 5-1. Valve Number Diagram 44
Figure 5-2. Basic Operating Mode Flow Schematics 47
Figure 5-3. Typical Breakthrough Curve for Arsenic 48
Figure 5-4. Arsenic Removal Water Treatment Plant Operation Log 53
Figure 5-5. 5,000-gal Chemical Storage Tank – Liquid Volume 54

Tables

Table 1-1. Adsorptive Media List in NSF/ANSI STD 61 (May 2002) 2
Table 3-1. Preliminary Capital Cost Estimate Examples for Four Types of Adsorptive Media Arsenic Removal Water Treatment Plants 22
Table 3-2. Final Capital Cost Estimate Examples for Typical Location for Four Types of Adsorptive Media Arsenic Removal Water Treatment Plants 25
Table 4-1. Final Capital Cost Estimate Example for Ideal Location for Four Types of Adsorptive Media Arsenic Removal Water Treatment Plants 36
Table 4-2. Process Pipe, Fittings, Valves, and Static Mixers – Itemized Cost Estimate 41
Table 4-3. Chemical Feed Pumps, and Static Mixers – Itemized Cost Estimate 42
Table 5-1. Valve Operation Chart for Treatment Vessels in Spent Adsorptive Media Regeneration Operational Modes 45
Table 5-2. Calculated Activated Alumina (–28, +48 Mesh) Downflow Pressure Drop Data 46
Table 5-3. Typical Process Conditions for Regeneration of an Activated Alumina Treatment System 50
Table 6-1. Price for Typical –28, +48 Mesh Activated Alumina 61
Table 6-2. Operating Cost Tabulation for an Activated Alumina Plant 62

Acronyms and Abbreviations

ANSI	American National Standards Institute
APHA	American Public Health Association
ASME	American Society of Mechanical Engineers
AWWA	American Water Works Association
CPVC	chlorinated polyvinyl chloride
EBCT	empty bed contact time
EPDM	ethylene propylene diene monomer
ETV	Environmental Technology Verification
FRP	fiberglass reinforced polyester
GFAA	graphite furnace atomic adsorption
GHAA	gaseous hydroxide atomic adsorption
gpd	gallons per day
gpm	gallons per minute
ICP-MS	inductively coupled plasma–mass spectrometry
MCL	maximum contaminant level
N/A	not applicable
NPT	National Pipe Thread
NSF	NSF International
NTNC	nontransient, noncommunity
OSHA	Occupational Safety and Health Administration
PLC	programmable logic controller
psig	pounds per square inch gage
PVC	polyvinyl chloride
SDWA	Safe Drinking Water Act (of 1974)
STP	stabilized temperature platform
TCLP	Toxicity Characteristic Leaching Procedure
TDS	total dissolved solids
U.S. EPA	United States Environmental Protection Agency
WEF	Water Environment Federation

Acknowledgments

This manual was written by Frederick Rubel Jr., Rubel Engineering, Inc. with input from Thomas J. Sorg, U.S. EPA, Lili Wang, Battelle Memorial Institute, and Bernie Lucey, State of New Hampshire. The manual was reviewed by the following people and their suggestions and comments were of valuable assistance in preparation of the final document:

Dr. Abraham Chen, Battelle Memorial Institute, Columbus, OH
Dr. Dennis Clifford, University of Houston, Houston, TX
Mr. Jeff Kempic, U.S. EPA, Washington, DC
Mr. Rajiv Khera, U.S. EPA, Washington, DC
Dr. Jerry Lowry, Lowry Environmental Engineering, Blue, ME
Mr. Bernie Lucey, State of New Hampshire, Concord, NH
Mr. Michael McMullin, ADI, Fredericton, NB, Canada
Mr. Edward Robakowski, Kinetico, Inc. Newberry, OH
Mr. Thomas Sorg, U.S. EPA, Cincinnati, OH
Ms. Lili Wang, Battelle Memorial Institute, Columbus, OH

1.0 Introduction

1.1 Purpose and Scope

This manual has been prepared to present up-to-date information on the design of central treatment plants for the removal of arsenic from water supplies using the adsorptive media process. Although the information provided in this manual is presented to serve the water treatment industry for small central treatment plants ranging in capacity from 30,000 to 1,000,000 gpd, the treatment information, for the most part, can be adapted to both larger and smaller systems. For the very small systems having capacities of less than 30,000 gpd (20 gpm), some of the equipment may be different and less expensive (for example, fiberglass reinforced polyester [FRP] tanks and automatic control valves likely would be used). The detailed design information presented in this manual applies to granular activated alumina and other granular adsorptive media technology for selective removal of arsenic from water supplies.

When arsenic is present above its maximum contaminant level (MCL) in a water supply in combination with quantities of other organic and/or inorganic contaminants, the adsorptive media process may not be the optimal method of arsenic removal. Those water supplies should be evaluated on a case-by-case basis for selection of the appropriate treatment method, or combination of methods.

1.2 Background

The Safe Drinking Water Act (SDWA) of 1974 mandated that the United States Environmental Protection Agency (U.S. EPA) identify and regulate drinking water contaminants that may have an adverse human health effect and that are known or anticipated to occur in public water supply systems. In 1975, under the SDWA, U.S. EPA established a MCL for arsenic at 0.05 mg/L. During the 1980s and early 1990s, U.S. EPA considered changes to the MCL, but did not make any. In 1996, Congress amended the SDWA and these amendments required that the U.S. EPA develop an arsenic research strategy, publish a proposal to revise the arsenic MCL by January 2000, and publish a final rule by January 2001.

On January 22, 2001, U.S. EPA published a final Arsenic Rule in the Federal Register that revised the MCL for arsenic at 0.01 mg/L (10 µg/L). Two months later, in March 2001, the effective date of the rule was extended to provide time for the National Academy of Science to review new studies on the health effects of arsenic and for the National Drinking Water Advisory Council to review the economic issues associated with the standard. After considering the reports by the two review groups, the U.S. EPA finalized the arsenic MCL at 0.01 mg/L (10 µg/L) in January 2002. The final rule requires all community and nontransient, noncommunity (NTNC) water systems to achieve compliance with the rule by February 2006. Adsorptive media processes are capable of achieving that level.

Granular activated alumina was the first adsorptive medium to be successfully applied for the removal of arsenic from water supplies. With pH adjustment to 5.5, the activated alumina process preferentially removes arsenic in place of competing ions, removes arsenic below the MCL, and provides a maximum removal capacity for arsenic. It also has been the author's experience that both As(III) and As(V) can be removed from raw water with activated alumina when the pH is adjusted down to 5.5.

The optimum granular adsorptive media mesh size for activated alumina is –28, +48. Larger mesh sizes can be used, but their arsenic capacities are lower. Finer mesh material has not been used for this application other than in laboratory bench-scale work. Mesh sizes for other products are listed in Table 1-1.

Recently, other adsorptive media have been developed and marketed for arsenic removal. These new materials are either iron or aluminum (modified activated alumina)-based. A listing of the activated alumina and the more recently developed media that have obtained NSF International (NSF) listing under NSF/ANSI STD 61 are

Table 1-1. Adsorptive Media Listed in NSF/ANSI STD 61 (November 2002)

Base Material	Company	Product Name	Material	Mesh Size or as Noted	Regeneration of Media
Aluminum	Alcan	AA-400G	Activated Alumina	14 × 28	Yes
Aluminum	Alcan	AA-400G	Activated Alumina	28 × 48	Yes
Aluminum	Alcan	AAFS-50	Modified Activated Alumina	14 × 28	Yes
Aluminum	Alcan	AAFS-50	Modified Activated Alumina	28 × 48	Yes
Aluminum	Alcoa	DD-2	Activated Alumina	28 × 48	Yes
Aluminum	Alcoa	CPN	Activated Alumina	28 × 48	Yes
Aluminum	Apyron	Aqua-Bind Arsenic	Activated Alumina	NA	NA
Aluminum	Engelhard	ATS Sorbent	Activated Alumina	NA	Yes
Aluminum	Engelhard	ATC Sorbent	Activated Alumina	NA	Yes
Aluminum	Engelhard	ARM	Activated Alumina	•80	Yes
Iron	ADI International	G2	Iron Modification	0.08-1.25 mm	Yes
Iron	SMI	SMI III	Iron/Sulfur	NA	NA
Iron	U.S. Filter/General Filter Products	GFH	Iron Hydroxide	0.32-2 mm	No
Iron	Bayer AG	Bayoxide E 33	Iron Oxide	0.5-2 mm	No
Zeolite	Water Remediation Technology	Z - 33	Modified Zeolite	8 x 40	No
Zirconium	Magnesium Elekton	Isolux	Zirconium Hydroxide	NA	NA

Note: Mention of trade names or commercial products does not constitute endorsement or recommendation by U.S. EPA.
NA = not available.

shown in Table 1-1. Other media currently are being researched by various companies and new products likely will appear on the market in the future.

The arsenic removal capacity for some newly developed adsorptive media also is enhanced by pH adjustment. Furthermore, some newly developed adsorptive media are able to be regenerated by means of chemical pH adjustment upon exhaustion of arsenic removal capacity. This manual is intended to apply to all presently available and future adsorptive media for removal of arsenic from water supplies. This manual provides a design methodology for the use of adsorptive media for arsenic removal with or without pH adjustment, and with spent adsorptive media regeneration or spent adsorptive media replacement.

1.3 Arsenic in Water Supplies

Arsenic occurs in combination with other ions as arsenic compounds. Unless contaminated by arsenic-bearing wastes, the arsenic concentrations in surface water supplies are normally less than the MCL. Ground water supplies have higher arsenic concentrations which may exceed the MCL due to the exposure of the water to arsenic-bearing materials. Because the revision of the MCL, a large number of systems which had previously been within compliance will require treatment for the removal of arsenic.

1.4 Arsenic Speciation

Arsenic is a common, naturally occurring drinking water contaminant that originates from arsenic-containing rocks and soil and is transported to natural waters through erosion and dissolution. Arsenic occurs in natural waters in both organic and inorganic forms. However, inorganic arsenic is predominant in natural waters and is the most likely form of arsenic to exist at concentrations that cause regulatory concern.

The valence and species of inorganic arsenic are dependent on the oxidation-reduction conditions and the pH of the water. As a general rule of thumb, arsenite, the reduced, trivalent form [As(III)], normally is found in ground water (assuming anaerobic conditions); and arsenate, the oxidized pentavalent form [As(V)], is found in surface water (assuming aerobic conditions). This rule, however, does not always hold true for ground water. Some ground waters have been found to have only As(III), others with only As(V), and still others with the combination of both As(III) and As(V). Arsenate exists in four forms in aqueous solution, depending on pH: H_3AsO_4, $H_2AsO_4^-$, $HAsO_4^{2-}$, and AsO_4^{3-}. Similarly, arsenite exits in five forms: $H_4AsO_3^+$, H_3AsO_3, $H_2AsO_3^-$, $HAsO_3^{2-}$ and AsO_3^{3-}.

Until recently, studies on the preservation of the arsenic species concluded that no effective methods existed for the preserving of As(III) and As(V) in water samples. Because of the lack of a good preservation method, field separation methods developed by Ficklin (1982), Clifford et al., (1983) and Edwards et al. (1998) have been used that employ an anion exchange column as the separation procedure. All the methods have been found to be effective and their use is recommended to determine the oxidation state of the arsenic in the source water to be treated.

1.5 Removal of Arsenic

In water supplies where the arsenic level exceeds the MCL, steps should be taken to reduce that level to below the MCL. This design manual focuses on the removal of excess arsenic by using activated alumina and other adsorptive media methods. However, other treatment methods exist, such as ion exchange, membrane separation, and chemical coagulation/filtration. Also, other options, including alternate sources of supply, may offer lower cost solutions. The first option is to locate an existing water supply within the service area with known quality that complies with the arsenic MCL in addition to all other MCLs (both organic and inorganic). If another source complies with the arsenic MCL but exceeds another MCL (or MCLs), it may still be feasible to blend the two sources and achieve a water quality that complies with all MCLs. Other features associated with this option may present liabilities, including, but not limited to, high temperature, or undesirable quantities of non-toxic contaminants such as turbidity, color, odor, hardness, iron manganese, chloride, sulfate, and/or sodium.

A second option is to pump good quality water to the service area from another service area. Similar to the alternate source within the service area, this imported source can be blended. However, the costs of installing the delivery system and delivering the water become increasingly unfavorable as the distance increases, the rise in elevation increases, and/or the existence of physical barriers occurs. The reliability, the cost and the assurance that the consumers will only use that source are factors to be considered. Another option (which includes an element of risk) is to drill a new well (or wells) within the service area. This approach should be attempted only when there is sound reason to believe that sufficient quantity of acceptable quality water can be located. The cost (both capital and operating) of a new well should not exceed the cost of treating the existing source. Other options such as “point-of-use” treatment systems are viable alternatives. However, the treatment reliability of such units cannot be assured unless there are stringent controls governing their operation and maintenance. Also, the problem of assuming that all users consume only water that has been treated where untreated water also is available should be addressed.

2.0 Arsenic Removal by Adsorptive Media Treatment Methods

2.1 Introduction

This chapter provides an overview of the design considerations that are applicable to adsorptive media treatment systems; applicable details are covered in later chapters. The design choices are as follows:

1. Selection of adsorptive media
2. Treatment with or without pH adjustment
3. Treatment media regeneration vs. treatment media disposal
4. Manual vs. automatic operation (or semiautomatic operation).

2.2 Granular Adsorptive Media

This design manual focuses on the implementation of the granular adsorptive media method for the selective removal of arsenic from water supplies with or without pH adjustment and with or without spent media regeneration. The treatment method example presented employs activated alumina media, which utilizes a single treatment train and consists of two downflow pressure vessels in series. This method is applicable to the use of any other adsorptive media, and, therefore, one adsorptive media can be replaced with another without replacing or making major modifications to an installed treatment system.

Activated alumina has a long history of use as an adsorptive treatment technology for arsenic removal. The media is a byproduct of aluminum production. It is primarily an aluminum oxide that has been activated by exposure to high temperature and caustic soda. The material is extremely porous and has a high average surface area per unit weight (350 m^2/g). The capacity for arsenic removal by activated alumina is pH-dependent, with the maximum removal capacity achieved at pH 5.5. Adjusting the pH of the source water, therefore, provides removal capacity advantages. As the pH deviates from the 5.0-6.0 range, the adsorption capacity for arsenic decreases at an increasing rate. Process demonstrations have shown that arsenic removal capacity has been reduced by more than 15% at pH 6.0 compared to that of pH 5.5 (Rubel, 1984).

Fluoride, selenium, and other inorganic ions and organic molecules also are removed by the same pH adjustment activated alumina process. The process, however, is preferential for arsenic at the optimum pH level of 5.5. Other ions that compete with arsenic for the same adsorptive sites at other pH levels are not adsorbed in the pH range of 5.0-6.0. Included are silica and hardness ions that are adsorbed in the pH range of 7-10.

Activated alumina either can be regenerated or can be replaced with new media when the selected breakthrough point is reached. At the optimum pH for arsenic removal, fluoride, selenium, some organic molecules, and some trace heavy metal ions are adsorbed; however, these are also completely regenerated along with arsenic. Because these ions compete for the same adsorptive sites with arsenic, their presence might deplete the alumina capacity for arsenic. When excess fluoride and arsenic are present in the water supply, a special treatment technique is required (Rubel and Williams, 1980).

Newly developed adsorptive media for arsenic removal consist primarily of iron-based materials or iron-modified activated alumina products (see Table 1-1). Some of these materials are not capable of regeneration and, thus, are used solely on a replacement basis (throw-away). Some of these media, mainly the iron-based products, have demonstrated arsenic removal capacities that exceed that of activated alumina particularly at pHs above the optimum pH 5.5 level for alumina treatment. The adsorptive capacity of these new materials also is affected by pH; however, their pH sensitivity does not resemble that of activated alumina. The benefit of pH adjustment may come more from the elimination of competition for adsorptive site by ions such as silica and phosphate. Consequently, these materials can be employed economically on a spent media replacement basis without the incorporation of pH adjustment chemicals and equipment. As new adsorptive media products and technology evolve, more efficient and economical arsenic removal treatment systems will become available.

2.2.1 pH Adjustment System

The adsorptive capacity of many adsorptive media, particularly activated alumina, is pH sensitive; removal capacity increases with decreasing pH. Employing pH adjustment, therefore, generally provides cost advantages regardless of whether the media is regenerated or replaced. Because the pH adjustment chemicals are usually the same chemicals that are use for regenera-

tion, it is generally advantageous to couple regeneration with pH adjustment systems when the media can be regenerated.

The advantages of using an adsorptive system with pH adjustment and regeneration or replacement of spent media are as follows:

1. System is low-cost and simple to operate.
2. System requires minimal operator attention (part time) during treatment runs.
3. System can employ manual operation and is adaptable to automatic operation.
4. Activated alumina media system has longer treatment runs (greatest removal capacity). Other media may have the same advantage.
5. Activated alumina system removes As(III) and As(V) at pH 5.5 (author's experience).

The disadvantages of using the pH adjustment method are as follows:

1. System requires chemical feed equipment and the storage and handling of corrosive chemicals (acid and caustic) for pH adjustment of raw water and re-adjustment of treated water.
2. pH adjustment chemicals increase inorganic ions and total dissolved solids (TDS) in the treated water. Secondary MCLs must be considered.
3. System with regeneration of spent media requires disposal of wastewater.

2.2.2 Non-pH Adjustment System

Some adsorptive media do not provide significant gains in removal capacity by lowering pH as does activated alumina. These materials, as well as activated alumina, are used without pH adjustment with good results particularly by very small systems that do not want to handle pH adjustment chemicals. In the case where pH adjustment is not used, regeneration is not advantageous or practical. Consequently, a non-pH adjustment system usually is coupled with replacement of spent media only.

The advantages of utilizing an adsorptive system without pH adjustment or regeneration of spent media are as follows:

1. System is inexpensive to install and, depending on the arsenic concentration and water quality (competitive ions, etc.), operational cost may be low.
2. System does not require chemical feed and storage equipment. The handling of corrosive chemical is not required.
3. System requires minimal operator attention (part time) during treatment runs.
4. System can employ manual operation, and automatic operation may not be necessary.
5. If arsenic breakthrough occurs, the arsenic concentration in the treated water will not exceed that of the raw water.
6. Disposal of spent arsenic-bearing activated alumina and iron based media products can be accomplished as a nonhazardous waste (i.e., media passes Toxicity Characteristic Leaching Procedure [TCLP] test).

The disadvantages of utilizing the non-pH adjustment method without regeneration of spent media are as follows:

1. System has lower adsorptive removal capacity, particularly an activated alumina system, resulting in much shorter treatment runs.
2. Other ions (e.g., silica, phosphate, etc) generally compete for adsorption sites with arsenic. The extent of competition depends on the pH of the source water.
3. System requires more frequent media replacement. Expensive materials could result in costly operation.

2.3 Treatment With or Without pH Adjustment

Prior to start of design, the best arsenic removal treatment method for a given application should be selected. Not all adsorptive media may be as pH-sensitive as activated alumina. The manufacturers of these materials advise that, even though pH adjustment does enhance arsenic removal performance, it is not required to achieve cost-effective results. The selection of adsorptive media will rely on either the manufacturer's media performance claims, or the development of independent technical performance data through field pilot testing or other means. Though costly, it is highly recommended that technical data be collected for a given application.

The decision to adjust treatment pH is determined in the conceptual design phase of the project. If the decision is

not to incorporate pH adjustment, then the capital cost for the treatment system is reduced and regeneration of adsorptive media is eliminated. If the decision is to incorporate pH adjustment for the treatment process, then the capability to regenerate the adsorptive media in place of media replacement is available (but optional).

2.4 Treatment Media Regeneration vs. Treatment Media Disposal

The decision to regenerate or replace spent treatment media for each system should be made based upon economic, technical, and/or aesthetic operating requirements. A major factor to be evaluated is the disposal of the regeneration wastewater.

Activated alumina and some other adsorptive media can be regenerated chemically for reuse rather than being disposed of after arsenic removal capacity has been exhausted. For regenerable treatment media, an economic/technical evaluation should be performed to determine whether to provide regeneration capability for the treatment system. If the treatment plant is capable of adjusting the raw and treated water pH, then the requirement to handle, store, and feed corrosive chemicals (acid and caustic) is already included. However, for a media replacement system that does not require major chemical storage equipment, the procurement of more costly packaging of pH adjustment chemicals will be required.

Regeneration involves removing the arsenic from the treatment media, precipitating the dissolved arsenic in the regeneration wastewater, dewatering the arsenic-bearing precipitated solids, and finally disposing of waste solids and liquids in a method acceptable to the presiding regulatory agency.

Due to increased capacity for arsenic removal resulting from pH adjustment, the implementation of a pH adjustment treatment system may be justified with or without regeneration of the spent adsorptive media.

Treatment media regeneration is more likely to be economically justified for systems with high flowrates and high raw water arsenic concentrations due to the resulting rapid consumption of arsenic capacity. The higher the arsenic concentration in the raw water, the higher the probability that regeneration of treatment media will be economically desirable. Each evaluation should include the variables that affect the cost of spent media regeneration vs. replacement.

Some adsorptive media are not capable of regeneration and, upon exhaustion of arsenic capacity, must be removed for disposal. For those materials, regeneration is not a consideration. For systems that are not large enough to economically justify the processing of the regeneration wastewater, regeneration generally is not a consideration. However, very small systems with capability to economically dispose of regeneration wastewater should evaluate this option.

Adsorptive media with very high arsenic removal capacities can economically justify media replacement rather than regeneration, even though the media can be regenerated.

Chemical regeneration may not be economical without implementation of the same chemicals for treatment pH adjustment. Therefore, the regeneration option should be discarded if water utilities prefer not to handle corrosive chemicals, or advocate that addition of treatment chemicals might degrade the quality of the potable water, or for other economical, technical, or aesthetic concerns.

2.5 Manual vs. Automatic Operation

The water utility owner should be informed of the advantages and disadvantages of operational options prior to finalizing the decision on mode of operation. The system can be operated manually, automatically, or semiautomatically. Automatic operation reduces the operator effort, but increases the cost of instrumentation and control equipment as well as the skill level required of the operator who must be able to maintain more sophisticated equipment.

Treatment systems utilizing adsorptive media are suitable for manual operation. That operational mode requires the treatment plant operator to accomplish the following:

1. Start/stop operation. Adjust flowrate.
2. Start/stop and adjust rate of chemical feed to control pH. Monitor pH (for systems with treatment process pH adjustment only).
3. Monitor and adjust system operating pressure.
4. Start/stop/control each backwash and regeneration step (for systems with spent media regeneration only).
5. Monitor and adjust water levels in reservoirs and other containment facilities.
6. Monitor arsenic concentrations for raw water, treated water, and intermediate sample points.

A fully automatic instrumentation and control system includes a programmable logic controller (PLC), an operator interface (screen with graphics), software, automatic instrumentation (sensors, transmitters, controllers, alarms, electrical conductors, pneumatic tubing, etc.), and automatically controlled equipment (valves, pumps, chemical feed pumps, air compressor, etc.). The instruments can monitor pH, flow, level, pressure, and temperature. Arsenic concentration analyses require manual laboratory procedures.

Semiautomatic operation entails automating any part of the instrumentation and control functions, and the remainder is accomplished manually. Not included are the PLC, operator interface, and required software. This operational mode reflects choices made by the owner with the advice of the designer. The choices require analysis of risk and treatment process efficiency vs. investment in equipment and labor. This design manual presents information regarding instrumentation and control functions, all of which can be accomplished automatically or manually. The only exception is the laboratory analysis requirement for determination of arsenic concentration in raw water, treated water, wastewater, and at intermediate sample points.

Automatic operation is only practical for systems employing treatment process pH adjustment and spent media regeneration. Semiautomatic operation is applicable to systems that employ treatment process pH adjustment with either spent media regeneration or replacement. For systems without treatment process pH adjustment, automatic operation is not practical. For those systems without treatment process pH adjustment, semiautomatic features for monitoring flow, pressure, and storage liquid levels may be desirable.

3.0 Design of Central Treatment System

The design of a central treatment system for the selective removal of arsenic from drinking water supplies is a straightforward process. For simplicity, unless differentiation of media is required, the term “adsorptive media” represents all adsorptive media. Arsenic removal treatment can be applied to existing water systems that have high arsenic, and to new water systems with high arsenic that must be reduced. The design philosophy presented in this manual provides information that can be applied to any arsenic removal adsorptive media that is capable of removing As(III) and As(V). If an adsorptive medium is not capable of removing As(III), preoxidation of As(III) to As(V) will be required.

As(III) can be easily convert to As(V) by several commonly used chemical oxidants. A laboratory study on six chemical oxidants has recently been completed by Ghurye and Clifford (2001). The results of this study showed that chlorine, potassium permanganate, and ozone were very effective oxidants, whereas chlorine dioxide and monochloramine were not. The actual amounts necessary to oxidize As(III) must take into account other oxidant demand substances in the source water such as iron, manganese, and sulfide. The study also showed that a solid oxidizing media used for iron and manganese removal has the ability to oxidize As(III). Air oxidation that is effective for oxidizing iron has been found to be ineffective for As(III) oxidation (Lowry and Lowry, 2002).

The information included presents flexibility to adapt to any combination of the following options:

1. Selection of adsorptive media.
2. Treatment with or without raw and treated water pH adjustment.
3. Spent adsorptive media regeneration or replacement.
4. Manual, semiautomatic, or automatic operation.

If a treatment system employs chemicals for media regeneration, it is prudent to use the same chemicals to adjust the pH of the treatment process.

A four-step design process is employed in this manual. The included steps are as follows:

1. Assemble design input data and information.
2. Conceptual Design.
3. Preliminary Design.
4. Final Design.

3.1 Assemble Design Input Data and Information

The design input data and information should be established prior to initiating the conceptual design. The design input data and information include, but are not limited to, the following:

1. Chemical analyses (see Figure 3-1) of representative raw water samples (includes all historical analyses). Comprehensive raw water analyses of all inorganic, organic, radionuclide, and bacteriological contaminants also are required to verify that this adsorptive media process is applicable for the selective removal of arsenic.
2. Treated water quality compliance standards issued by the regulatory agency within whose jurisdiction the system resides.
3. Regulatory design standards.
4. Wastewater and waste solids disposal ordinances issued by the responsible regulatory agency.
5. Data on system production and consumption requirements (present and future).
6. Manual vs. automatic operation.

CONTAINER
SAMPLE DATE
TAKEN BY:

Analysis *								
Calcium								
Magnesium								
Sodium								
Total Cations								
Total Alkalinity (M)**								
Phenolphthalein Alkalinity (P)**								
Total Hardness**								
Sulfate								
Chloride								
Nitrate								
Phosphate (PO_4)								
Silica (SiO_2)								
Free Carbon Dioxide								
Iron (Fe) Unfiltered								
Iron (Fe) Filtered								
Manganese								
Turbidity (NTU)								
Color (Units)								
Fluoride								
Total Arsenic								
Soluble Arsenic								
Particulate Arsenic								
Arsenic (III)								
Arsenic (V)								
PH (Units)								
Specific Conductance (micro-mhos)								
Temperature (°F)								

* All units reported in mg/L excepted as noted.
** as $CaCO_3$.

Figure 3-1. Arsenic Removal Water Treatment Plant Water Analysis Report

The treatment system is a subsystem within the larger water utility system. Other subsystems are the well pump, the storage reservoirs, the pressurization system, and the distribution system. This design manual is applicable when arsenic removal is the only treatment required. Removal of other contaminants such as bacteria, suspended solids, hardness, organics, or other contaminants also may be required. In those cases, alternative treatment processes and/or additional treatment processes should be evaluated.

The sequence of other treatment steps should be compatible with the selected adsorptive media arsenic removal method. Removal of suspended solids, organics, and hardness should take place upstream of the adsorptive media arsenic removal process. Disinfection with chlorine should take place after arsenic removal using activated alumina because it has been the author's experience that chlorine will degrade the performance of activated alumina. No known investigation has determined the amount of chlorine that can be tolerated by the alumina; however, process degradation has been eliminated on projects conducted by the author where prechlorination was terminated. If chemical oxidation is required for the conversion of As(III) to As(V) for the successful performance of another type of adsorptive media, it is recommended that the preoxidation chemical be prevented from coming in contact with the media, unless advised otherwise by the media manufacturer. Other treatment processes may be required upstream of the arsenic removal process, but that decision will be made on a case-by-case basis.

For ground water systems, the most practical concept is to install the treatment plant in the immediate vicinity of the well (space permitting). The well pump then will deliver the water through treatment into distribution and/or storage. If the existing well pump is oversized (pumps at a much higher flowrate than the maximum daily flowrate requirement), it should be resized to deliver slightly more (i.e., 125% minimum) than the peak requirement. The flowrate dictates the treatment equipment size and capital cost. The design rate should be minimized to the extent possible to ensure that the capital cost of the treatment system is minimized. Reducing flowrate for an oversized pump can result in excessive equipment wear and energy costs. The treatment media volume is a function of flowrate. The treatment vessels, pipe sizes, and chemical feedrates all increase as the flowrate increases. A well-matched pump likely can handle any additional head loss associated with the treatment system without significant drop in pump efficiency. If the additional head loss cannot be met with the existing pump, several options exist: increasing the size of the motor, increasing the size of the impeller, or replacing the pump. Storage should be provided to contain a minimum of one half the maximum daily consumption requirement. This is based on the premise that maximum consumption takes place during 12 hrs of the day. Then, if treatment operates during the entire 24 hrs, storage drawdown occurs during 12 hrs and recovers during the remaining 12 hrs.

Construction materials must comply with OSHA standards, local building codes, and health department, requirements in addition to being suitable for the applicable pH range and compatible with any pretreatment chemicals used (e.g., chlorine, ozone, etc.). Both drinking water treatment chemicals and system components should comply with NSF/ANSI STD 61.

Treatment system equipment should be protected from the elements. Although not mandatory in some locations, it is prudent to house the system within a treatment building.

Wastewater resulting from backwash and regeneration of the treatment media can only be disposed of in a manner permitted by state and/or local regulatory authorities. Several options are available for disposal; however, they are subject to climate, space and other environmental limitations. Because each of the variables can significantly affect both capital and operating costs, careful evaluation of the available wastewater handling options is required prior to making conceptual selections.

3.2 Conceptual Design

The second step in the design process is the conceptual design, which provides a definition of the process. However, it does not provide equipment size, arrangement, material selection, details, or specifications. Using the design input data and information previously described (Section 3.1), the following decisions should be made:

1. Selection of adsorptive media.

2. Decision on whether to implement treatment process pH adjustment.

3. Decision regarding regeneration or replacement of spent adsorptive media (applicable if treatment process pH is used).

4. Decision regarding implementation of manual vs. automatic operation (applicable if spent adsorptive media is regenerated).

There are four basic options from which a Conceptual Design can be selected. Every combination of options will perform the process and, under a selected set of conditions, a certain combination may be preferred. The options are as follows:

1. Gravity or pressure flow
2. Single or multiple treatment bed(s)
3. Upflow or downflow treatment flow direction
4. Series or parallel treatment vessel arrangement.

An efficient, cost-effective configuration is a pressure system utilizing a dual vessel series downflow configuration with bypass and reblending of raw water. Some state regulations, however, may not allow the bypass of untreated water to be blended with treated water. The two-bed series configuration yields the highest arsenic loading on the treatment media and the lowest treated water arsenic level. The single treatment unit configuration generally is less efficient unless there is an exceptionally large treated water storage capacity. A gravity flow system does not provide the economics of a pressure system; treatment flowrates are lower, repumping of treated water is always required, and capital costs are higher. Because free carbon dioxide (CO_2) is released to the atmosphere in gravity systems utilizing treatment process pH adjustment, pH adjustment is easier to control in a pressure system. Downflow treatment has consistently yielded higher arsenic removal efficiency than upflow. Because the downflow concept utilizes a packed bed, the flow distribution is superior. If the upflow beds are restrained from expanding, they would in effect also be packed. However, they would forfeit the necessary capability to backwash. Once the bed configuration is defined, a basic schematic flow diagram is prepared (see Figures 3-2, 3-3, and 3-4). These diagrams present all of the subsystems without pH adjustment and regeneration (Figure 3-2), with pH adjustment without regeneration (Figure 3-3), and with pH adjustment and regeneration (Figure 3-4). An illustration of the treatment unit is provided as Figure 3-5. A summary of subsystem components is presented in Appendix A.

For systems in which the raw water arsenic concentration is slightly above the arsenic MCL, bypassing and reblending a fraction of the raw water with the remaining fraction that is treated should be evaluated. This option saves treatment chemicals, extends treatment media cycle life, and reduces operating cost. If bypassing and blending is found to be feasible, the treatment system can be sized to treat less than 100% of the total flow.

Prior to proceeding with the Preliminary Design, financial feasibility should be determined. Funding limits for the project should be defined. A determination that funding is available to proceed with the project should be made; this requires a preliminary rough project estimate with an accuracy of ±30%. If the preliminary rough estimate exceeds the available funds, adjustments should be made to increase funding or reduce project costs.

3.2.1 Manual Operation

In a manual operation, the treatment plant operator personally performs all of the operating functions and makes all operating decisions. The treatment plant equipment does not accomplish any function independent of the operating personnel. The equipment is simple and performs the basic functions that the operator implements. The manual operation includes the following:

1. Motors (pumps, chemical pumps, etc.) with manual start/stop controls. Some motors have manual speed adjustment capability. Chemical pumps have manual speed and stroke length adjustment capability.

2. Valves with manual handle, lever, handwheel, or chainwheel operators.

3. Instrumentation sensors with indicators. Instrumentation is installed in-line where operating data (flowrate, total flow, pressure, pH, and liquid levels) are indicated. In-line pH sensors, magmeters, ultrasonic level sensors are other instruments that require electric service.

The adsorptive media treatment process can perform manually with or without treatment process pH adjustment and with spent media replacement or regeneration.

3.2.2 Automatic Operation

In an automatic operation, the treatment plant is operated by a PLC, which initially is programmed by the operator, the computer supplier, or an outside specialist. If programmed by someone other than the plant operator, the operator should be trained by that individual to adjust program variables and, if necessary, modify the program. The operator interface and printer are the equipment items which the operator uses during the performance of treatment plant functions. In addition, the operator should calibrate and check all of the components of the automatic operating equipment system on a routine periodic basis. Finally, the treatment plant operator or a designated instrumentation and control specialist should be capable of performing emergency maintenance and/or repair of all components.

Every function included in an automatic system should be capable of manual operation.

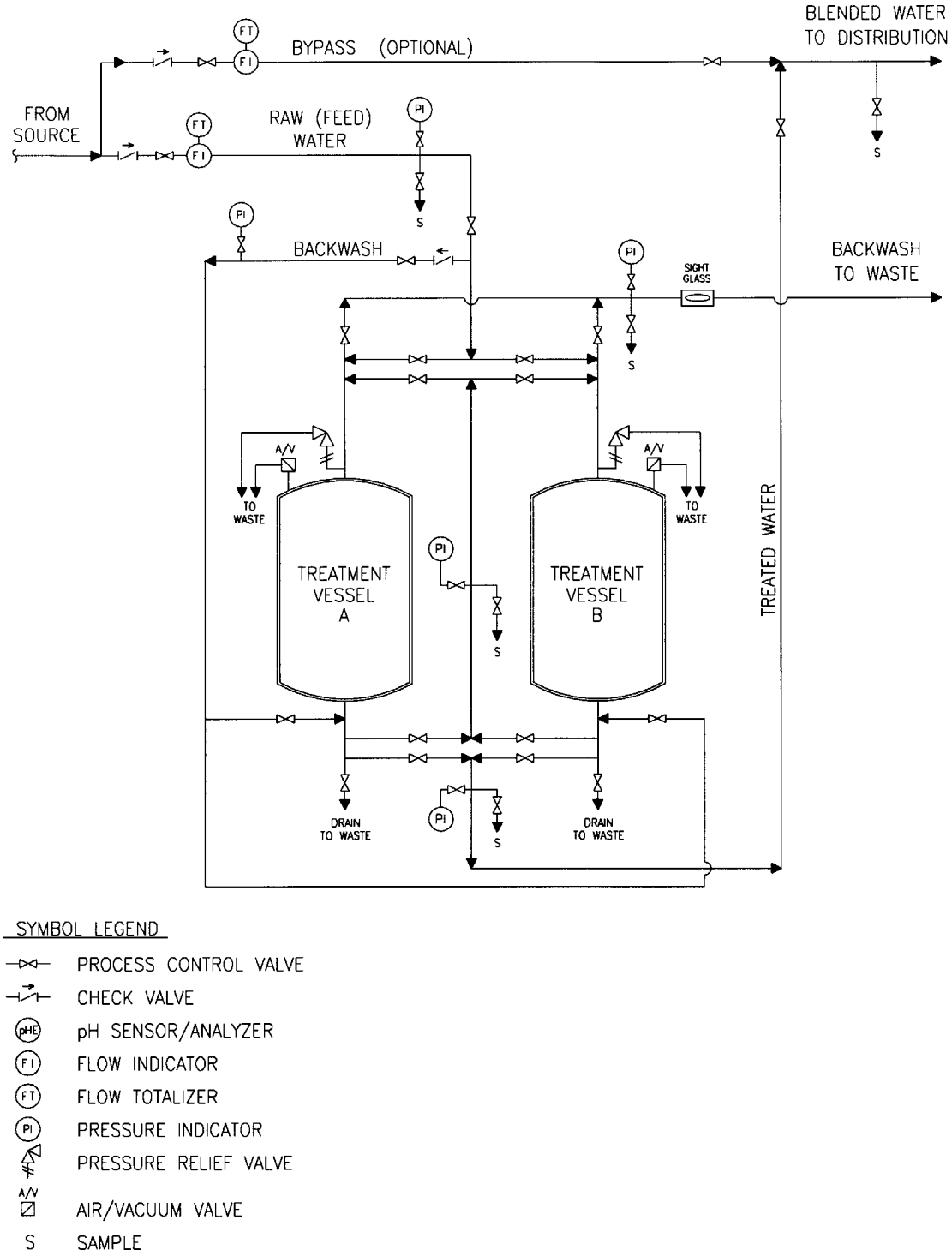

Figure 3-2. Flow Diagram for Dual Vessel Series Downflow Treatment System Without pH Adjustment, With Replacement of Spent Media

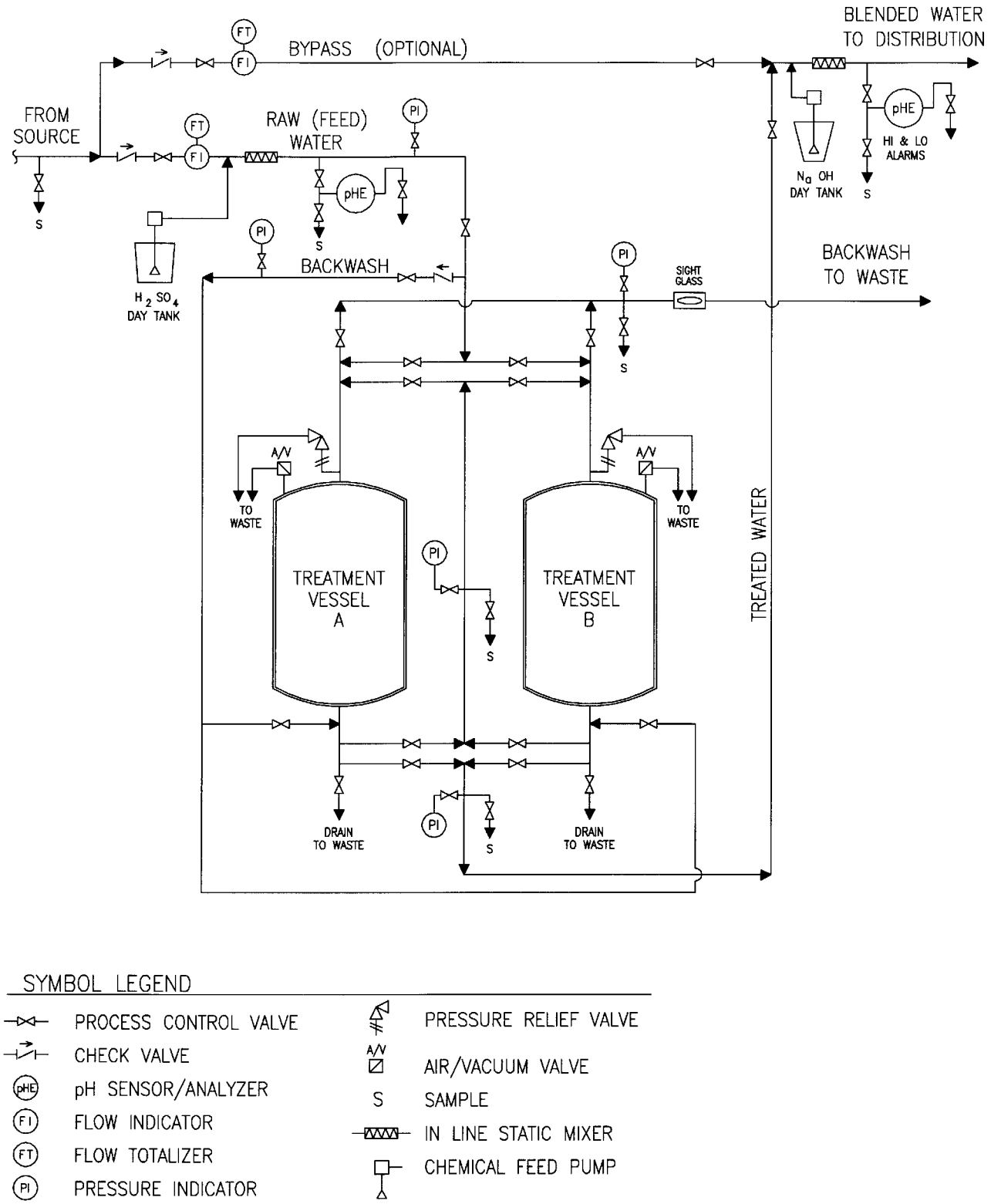

Figure 3-3. Flow Diagram for Dual Vessel Series Downflow Treatment System With pH Adjustment, With Replacement of Spent Media

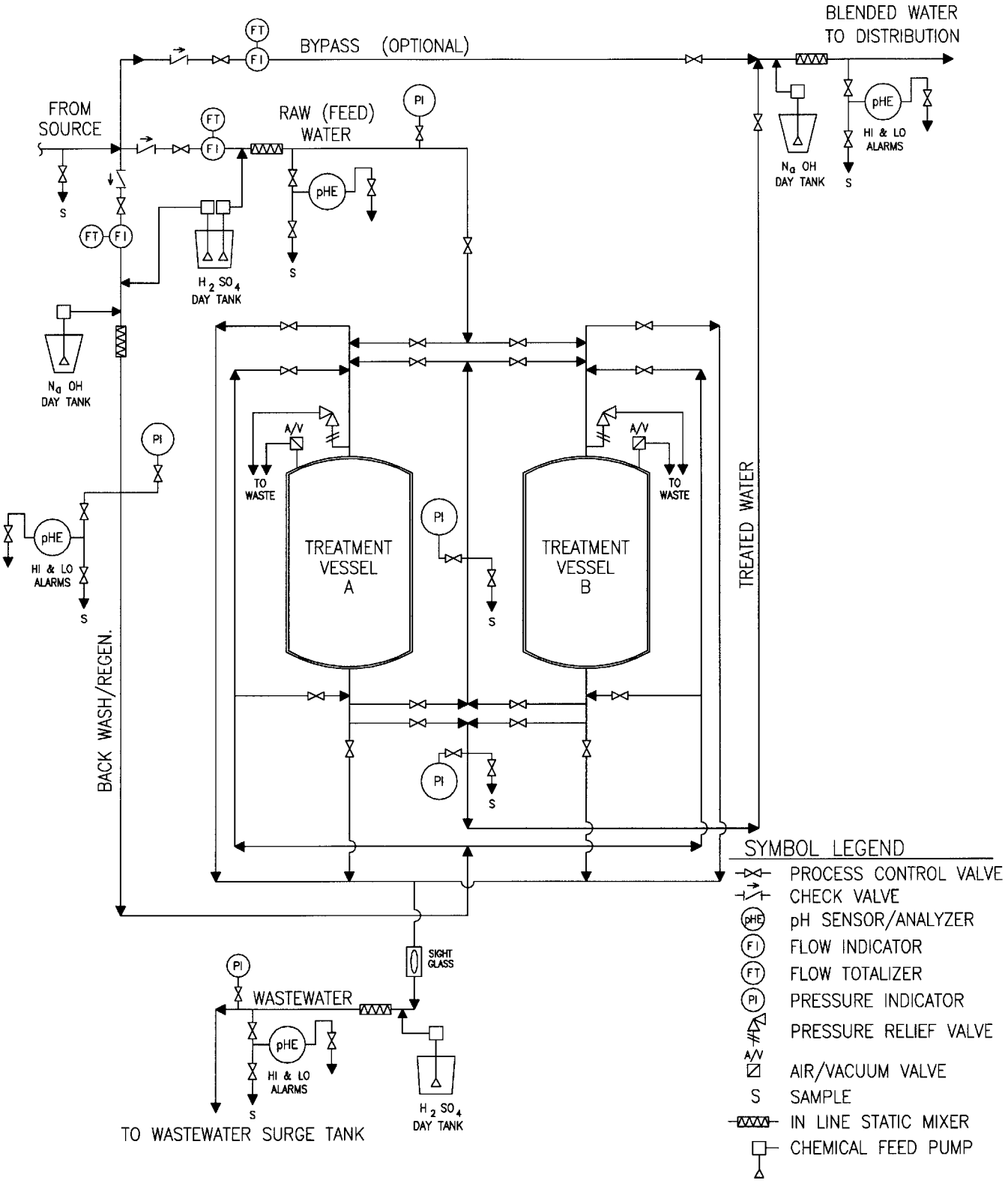

Figure 3-4. Flow Diagram for Dual Vessel Series Downflow Treatment System With pH Adjustment, With Regeneration of Spent Media

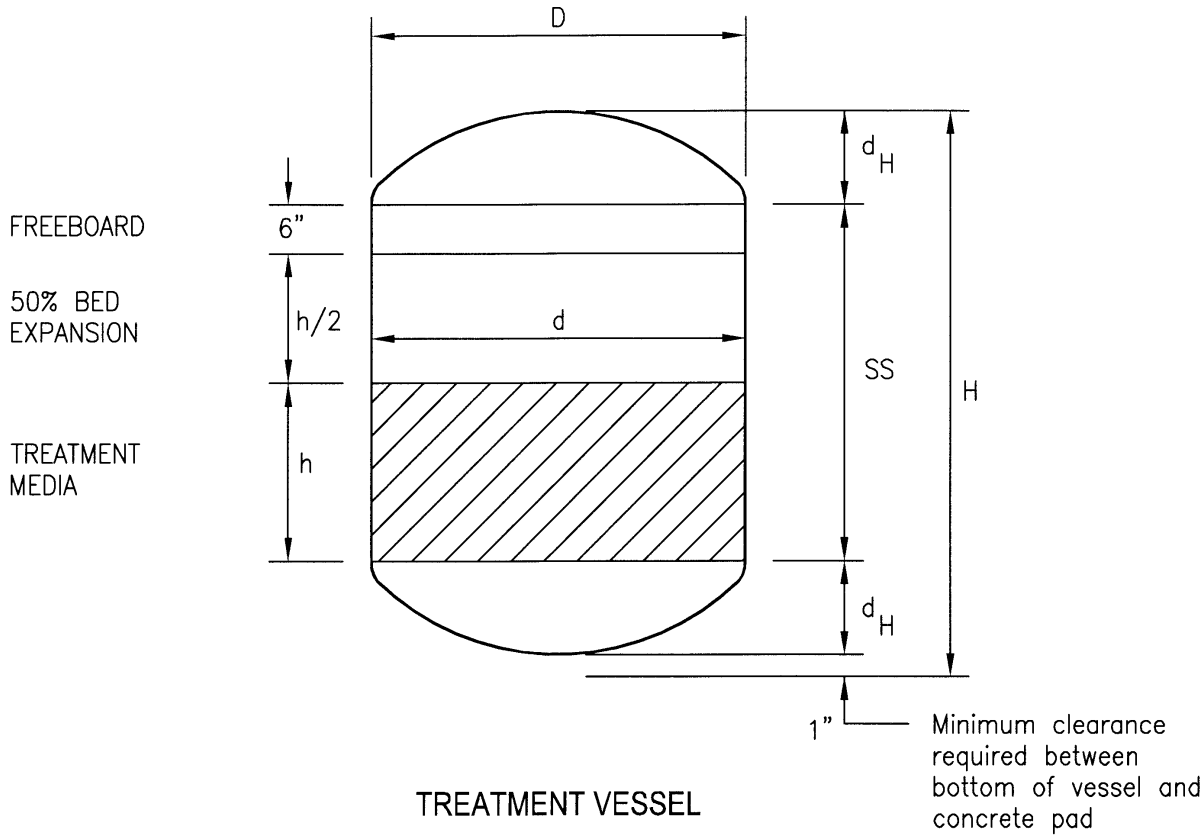

SYMBOLS

q – TREATED WATER FLOW RATE (gpm)

d – TREATMENT BED DIAMETER (ft.), $d = \sqrt{4V/\pi h}$

h – TREATMENT BED DEPTH (ft.)

V – TREATMENT BED VOLUME – $\frac{\pi d^2 h}{4}$ ($ft.^3$)

M_d – DENSITY OF TREATMENT MEDIA ($lb./ft.^3$)

M_W – WEIGHT OF MEDIA (lbs.)

D – OUTSIDE DIAMETER OF TREATMENT VESSEL (ft.)

d_H – DEPTH OF DISHED PRESSURE HEAD (ft.)

H – OVERALL HEIGHT OF SKID MOUNTED TREATMENT VESSEL (ft.)

SS – STRAIGHT SIDE (ft.)

GIVEN

$d > h/2$, 3'–0" < h < 6'–0"

$H = 2\,d_H + h + h/2 + 6" + 1"$

$D = d + 1"$

$M_d = 45\ lb./ft^3$ (VARIES WITH MEDIA IN VESSEL)

$M_W = M_d \times V = 45V$ (lb.)

Figure 3-5. Treatment Bed and Vessel Design Calculations

The automatic equipment is more sophisticated and costly than that used in a manual operation. When functioning normally, an automatic operation can function continuously with minimal operator attention. This is recommended for treatment systems in remote areas or areas that are difficult to access, and systems for which operator availability is limited. The automatic operation includes the following:

1. Motors (pumps, chemical pumps, air compressors, etc.) with automatic start/stop and speed adjustment controls. Chemical pumps may have manual stroke length adjustment. Motors should also have a manual on/off control.

2. Valves with either pneumatic or electric operators. Flow or pressure control valves with electronic positioners for valves with automatic operators. Valves require manual overrides for operation during start-up, power failure or compressed air failure. Valves should have opening and closing speed controls to prevent water hammer during automatic operation. Valve electric position indicators are optional.

3. Automatic instrumentation may be electronic, pneumatic, or a combination. The instruments and controls should always be capable of transmitting and receiving electronic information to and from the PLC. In a fully automatic system all of the control, monitoring, and alarm functions are monitored and controlled by the PLC. Backup manual instruments (e.g., flowrate indicators, pressure indicators, pH indicators, and liquid level indicators) are recommended to provide verification of automatic instrumentation if treatment plant budget is available. Comprehensive automatic alarms that notify operators and/or shut down increments or the entire treatment system relating to every type of system malfunction at the moment such events occur is a necessary function that should be incorporated in all applicable instrumentation components.

The adsorptive media treatment process with automatic operation can perform with or without treatment process pH adjustment and with spent media replacement or spent media regeneration. Automatic operation is most applicable to systems with treatment process pH adjustment and treatment media regeneration. Systems employing adsorptive media without treatment process pH adjustment and media regeneration do not benefit greatly from computer-controlled operations.

A semiautomatic operation that employs individual controllers to automatically start/stop or adjust some, but not all, of the operational items in the system can contribute significantly to the treatment system operation without computer control of the entire operation. These semiautomatic functions should include alarms that will notify operators of process functions exceeding limits established for effective and/or safe operation. Alarm events can be staged at single (e.g., high) or dual (e.g., high-high) levels. In a dual-level alarm, the first level notifies the operator that the performance is out of tolerance, and the second level shuts down either a single process function (e.g., a pump) or the entire process. Examples of semiautomatic operational functions include, but are not limited to, the following:

1. Flow control loop includes an electronic flow sensor with totalizer (e.g., magnetic flowmeter) that sends an electronic signal to an electronic flow controller (with high and low flowrate alarms), which in turn sends an electronic signal to a flow control valve (butterfly valve or ball valve) with an actuator and electronic positioner. The plant operator designates the required flowrate at the flow controller. The controller receives the flowrate measurement from the flow sensor and transmits signals to the flow control valve positioner in order to adjust the valve position until the flowrate matches that required by the process. If the flowrate deviates from the limits established for the process, then a high flowrate or low flowrate alarm will be issued.

2. Pressure control loop includes an electronic pressure transmitter that sends an electronic signal to an electronic pressure controller (with high and low pressure alarms), which in turn sends an electronic signal to a pressure control valve with an actuator and electronic positioner. The plant operator designates the required pressure at the pressure controller. The controller receives the pressure measurement from the pressure transmitter and transmits signals to the pressure control valve positioner to adjust the valve position until the pressure matches that required by the process. If the pressure deviates from the limits established for the process, then a high pressure or low pressure alarm should be issued.

3. pH control loop includes an electronic pH sensor which transmits a pH signal to a pH analyzer (with high and low level alarms) which in turn sends an electronic signal to a converter which transmits a pulse signal to a chemical feed pump (acid or caustic) to adjust the feed pump stroke speed. The plant operator designates the required pH at the pH analyzer. The pH analyzer receives the pH measurement from the pH sensor and transmits signals to the chemical feed pump (via the converter) to adjust the pump stroke speed until the pH matches that required by the process. If the pH deviates from

the limits established for the process, then a high pH or low pH alarm should be issued.

4. Liquid level control loop includes an electronic liquid level sensor (e.g., ultrasonic level sensor) which transmits an electronic liquid level signal to a level controller which indicates the liquid level and transmits an electronic signal to one or more motors (pump, mixer, etc.) to start or stop. At the level controller, the plant operator designates the required liquid levels at which motors are to start and stop. The level controller receives the liquid level measurement from the liquid level sensor and transmits signals to the motor(s) to start or stop. If the liquid level deviates from the limits established for the process, then a high or low liquid level alarm should be issued.

Many other process functions are performed automatically by means of relays and other electrical devices. An example is the electrical interlock of chemical feed pumps with raw water pumps, which prevents chemical feed into the process without the flow of process water. Another example is the use of a flow switch in a pressure relief valve discharge pipe, which, upon detection of water flow, issues an alarm and stops the process feed pump. The list of individual failsafe automatic functions can be extensive. All applicable codes, standards, and OSHA requirements should be reviewed to determine which requirements are applicable to the project. Then based upon sound judgment, available budget, treatment plant operator capability, and availability, a decision should be made as to whether a given function should be automatic or manual.

3.3 Preliminary Design

After completion and approval of the Conceptual Design by the client, the regulatory agency(s), and any other affected party, the Preliminary Design commences. This stage includes sizing of the equipment, selecting materials for construction, determining an equipment layout, and upgrading the preliminary capital cost estimate to a ±20% accuracy. The deliverable items are:

1. Schematic flow diagrams (see Figures 3-2, 3-3, and 3-4)

2. Preliminary process equipment arrangement drawings (see Figures 3-6, 3-7, and 3-8 for examples)

3. Outline specifications

4. Preliminary capital cost estimate (see Table 3-1).

3.3.1 Treatment Equipment Preliminary Design

This section provides the basic methodology for sizing equipment items and selecting materials of construction for arsenic removal treatment systems using granular adsorptive media with pH adjustment and regeneration of exhausted treatment media. An example illustrating this method is provided in Appendix B. The example is based on use of dual vessel series downflow granular adsorptive media with pH adjustment, exhausted media regeneration, and manual operation. The empty bed contact time (EBCT) used for this application is 5 min per vessel. For systems using different process parameters (EBCT, without pH adjustment, with disposal of exhausted adsorptive media) the design information presented in this document is easily adjusted. For automatic or semiautomatic operation the system basic design does not change; however, equipment material and installation costs will vary.

3.3.1.1 Treatment Bed and Vessel Design

In accordance with the discussion presented in Section 2.2, the recommended treatment concept is based on the use of two treatment pressure vessels piped in series using the downflow treatment mode. Treatment vessel piping also should be configured to provide for media backwashing (upflow). The treatment vessel materials of construction employed in the design example presented in Appendix B are carbon steel (grade selection based on cost-effective availability) fabrication, assembly, and testing that complies with American Society of Mechanical Engineers (ASME) Code Section VIII, Division 1. The interior should be lined with abrasion-resistant vinyl ester or epoxy coating. Interior lining material should be NSF-certified for potable water application, and suitable for pH range 2.0-13.5. Vessel pressure rating should be 50 psig or the minimum necessary to satisfy system requirements. Other vessel materials of construction (e.g., fiberglass), internal lining materials (e.g., abrasion resistant epoxy, rubber, etc.), and stainless steel without lining, may also be employed.

Prior experience with activated alumina indicates that the volume of treatment media (V) in each treatment vessel is • ft^3 per gpm of process water flowrate to provide an EBCT time of 10 min in the dual vessel downflow process (e.g., 5 min EBCT in each vessel). Actual residence time is approximately half the EBCT, because the space between the grains of media is approximately 50% of the total bed volume. (Note: When raw water is bypassed and blended back with treated water, only the treated water is included in sizing the treatment media volume.) In order to prevent “wall effects”, bed diameter (d) should be equal to or greater than one-half the bed

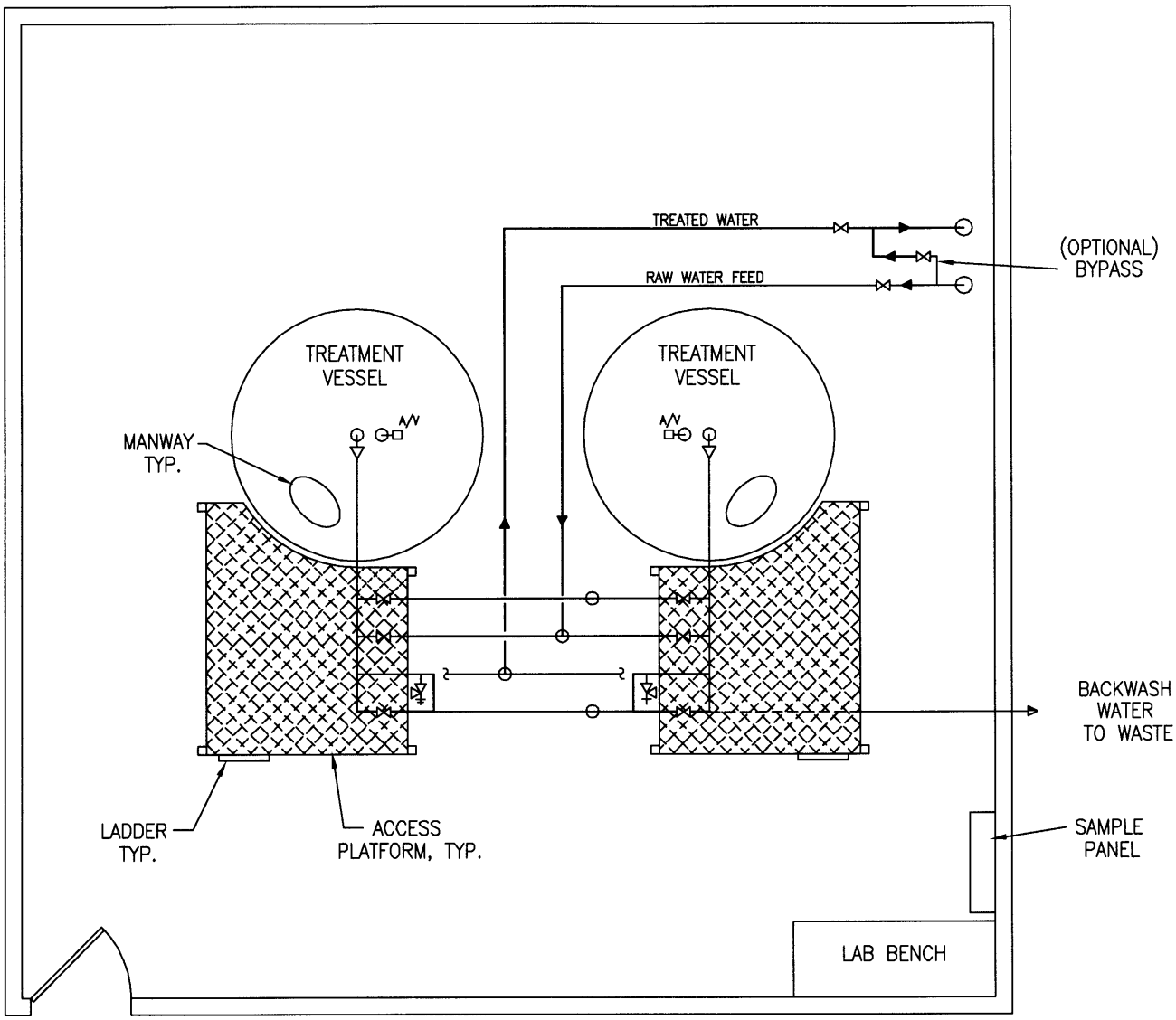

Figure 3-6. Treatment System Plan for Adsorptive Media Without Process Water pH Adjustment and With Spent Media Replacement

depth (h). Good practice indicates that bed depth should be a minimum of 3 ft and a maximum of 6 ft. At less than minimum depth, distribution problems may develop; and, at greater than maximum depth, fine material removal and pressure loss becomes a problem. For very small systems using tanks of 1-2 ft in diameter, the bed depths could be as low as 2 ft. The treatment bed and vessel design is illustrated in Figure 3-5. A typical example for determining treatment bed and treatment vessel dimensions is presented in Appendix B.

Five minutes is recommended as a minimum limit for the EBCT for activated alumina. For EBCTs of other adsorptive media, the designer should rely either upon the manufacturer's instructions, or develop the technical data independently by means of field pilot studies. As the EBCT decreases below the recommended value, two undesirable features occur. First, the treatment is less efficient (% arsenic removal is reduced), resulting in treated water arsenic concentration not reaching a low enough concentration; and second, regeneration frequency or spent media replacement frequency increases, requiring more operating cost, operator attention, and proportionately more downtime. Conversely, raising the EBCT above the recommended level increases the size of the treatment beds and their vessels, thereby increasing capital cost and space requirements.

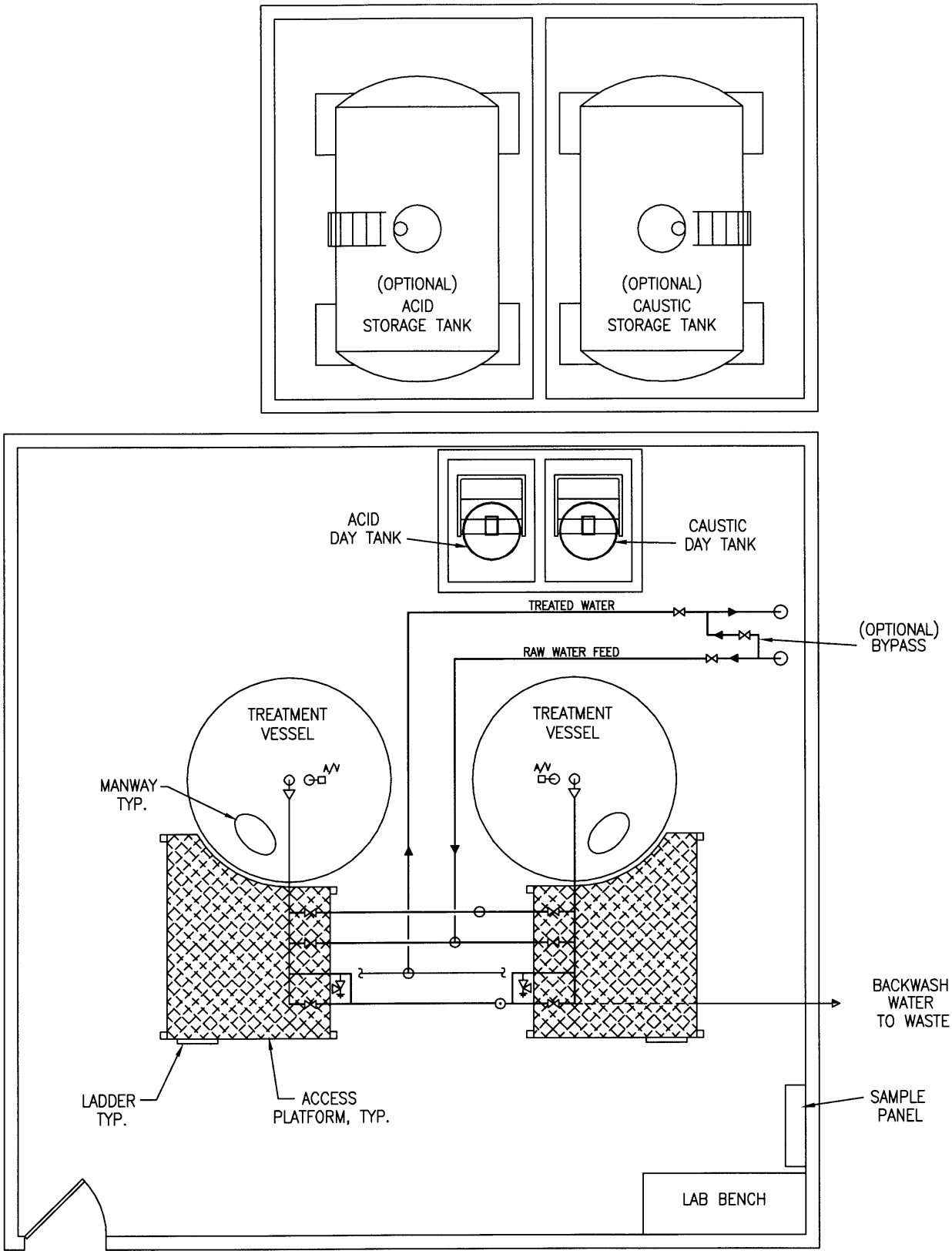

Figure 3-7. Treatment System Plan for Adsorptive Media With Process Water pH Adjustment and Spent Media Replacement

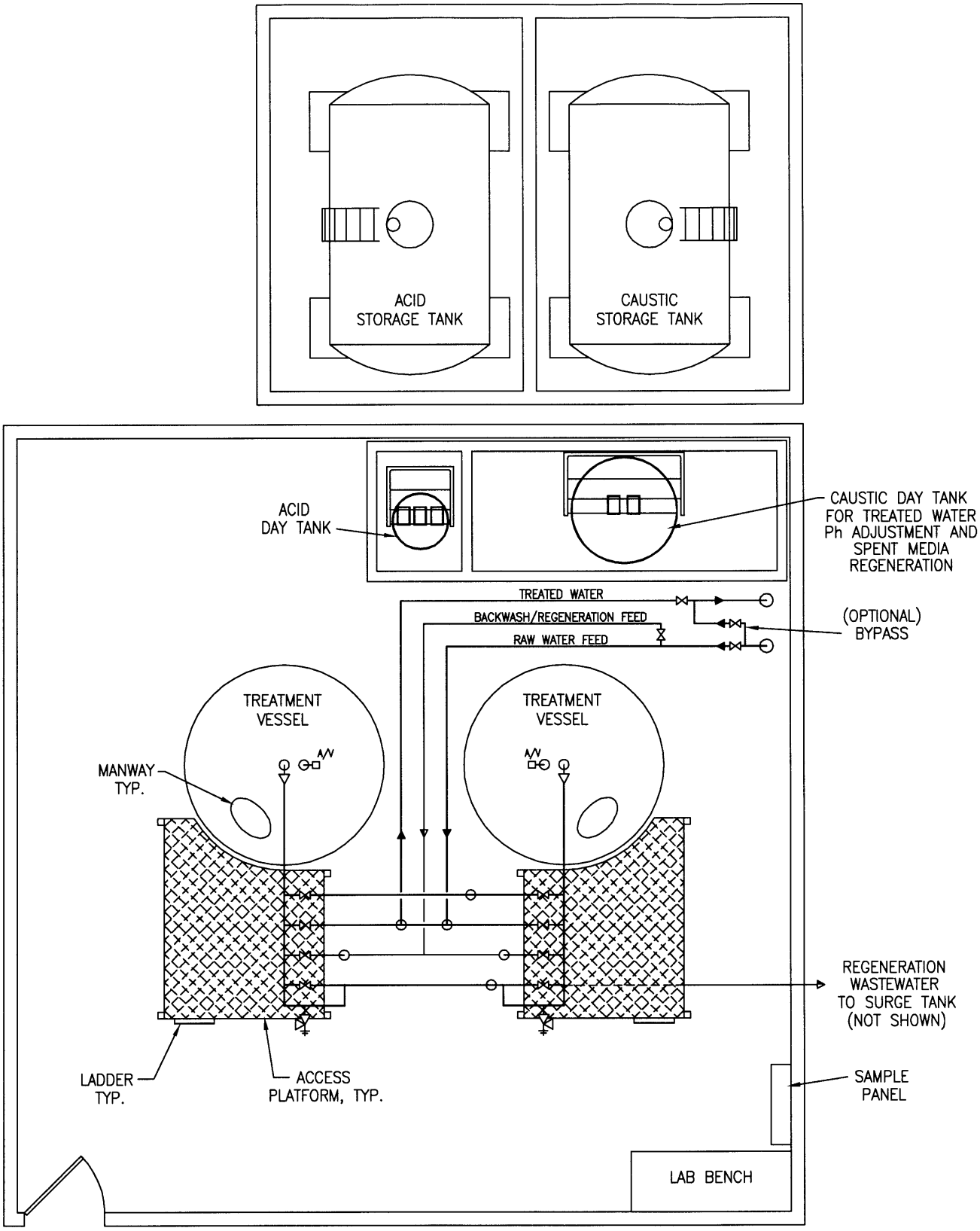

Figure 3-8. Treatment System Plan for Adsorptive Media With Process Water pH Adjustment and Spent Media Regeneration

Table 3-1. Preliminary Capital Cost Estimate Examples for Four Types of Adsorptive Media Arsenic Removal Water Treatment Plants

Location:
Flowrate: 570 gpm
Date:

	Cost ($1,000)			
	Manual Operation w/Media Replacement w/o pH Adjustment	**Manual Operation w/Media Replacement w/pH Adjustment**	**Manual Operation w/Media Regeneration w/pH Adjustment**	**Automatic Operation w/Media Regeneration w/pH Adjustment**
Process Equipment				
Treatment Vessels	78	78	78	78
Treatment Media	33	33	33	33
Process Piping, Valves, and Accessories	27	34	50	68
Instruments and Controls	8	13	19	70
Chemical Storage Tanks	N/A	45	45	45
Chemical Pumps and Accessories	N/A	5	10	10
Subtotal	146	208	235	304
Process Equipment Installation				
Mechanical	30	42	44	48
Electrical	12	22	22	38
Painting and Miscellaneous	13	15	15	15
Subtotal	55	79	81	101
Miscellaneous Installed Items				
Regeneration Wastewater Surge Tank	N/A	N/A	130	130
Building and Concrete	45	70	70	70
Site Work, Fence, and Miscellaneous	15	17	24	24
Subtotal	60	87	224	224
Contingency 20%	53	75	108	126
Total[(a)]	314	449	648	755

(a) Engineering, exterior utility pipe and conduit, wastewater and waste solids processing system, finance charges, real estate cost and taxes not included.
N/A = not applicable.

Pressure vessel fabrication is standardized by diameter in multiples of 6-inch outside diameter increments. Tooling for manufacture of pressure vessel dished heads is set up for that standard. Design dimensions differentiate between pressure vessel and treatment bed diameters. The vessel outside diameter (D) is approximately 1 inch greater than the bed (or vessel inside) diameter, which conservatively provides for both vessel walls with lining as well as fabrication tolerances. If the pressure is high (100 psig or greater), the 1 inch will increase to reflect the increased vessel wall thickness.

Although many methods are available for distributing the water flow through a treatment bed, the following method has been successfully used in adsorptive media water treatment plants that are presently in operation. The water is piped downward into the vessel through an inlet diffuser. This diverts the flow into a horizontal pattern. From there it radiates in a horizontal plane prior to starting its downward flow through the adsorptive media bed. The bed, in turn, is supported by a false flat bottom, which is supported by the bottom head of the pressure vessel by means of concentric rings. The false flat bottom also supports the horizontal header and plastic fabric sleeved perforated lateral collection system. Treatment media are placed in the vessel through circular manway(s) with hinged cover(s) in the top head of the vessel.

3.3.1.2 Pipe Design

For systems with treatment process pH adjustment and spent media regeneration, material should be suitable for ambient temperature, pH range of 2.0-13.5, system pressure, and potable water service. At a low pH, carbon steel is not acceptable unless interior lining is included. Stainless steel is acceptable; however, it may be too costly. Plastic materials such as polyvinyl chloride (PVC) are satisfactory. PVC is usually the best selection based on its availability, NSF certification for potable water service, low cost, and ease of fabrication and assembly. The drawbacks to the PVC materials are their loss of strength at elevated temperatures (above 100°F); their coefficients of thermal expansion; their external support requirements; their deterioration from exposure to sunlight; and their vulnerabilities to damage from impact. Nevertheless, these liabilities are outweighed by the low cost and suitability for the service. The piping can easily be protected from all of the above concerns, except elevated ambient and/or water temperatures. If elevated temperature exists, the use of FRP pipe is recommended. This material provides the strength and support that is lacking in the pure plastic materials.

For systems without treatment process pH adjustment metallic pipe (e.g., carbon steel, copper, etc.) may be used in place of plastic. However, care must be exercised to prevent occurrence of corrosive conditions including, but not limited to, process water pH, free CO_2, chloride concentration, and sulfate concentration, as well as galvanic and pit corrosion.

The piping system should be economically sized to allow for delivery of design flow without excessive pressure losses. If water velocities present conditions for water hammer (due to fast closing valves, etc.), shock-preventing devices will be provided.

Isolation and process control valves should be wafer style butterfly type, except in low flowrate systems where small pipe size dictates the use of true union ball valves. The use of inexpensive, easily maintained valves that operate manually provides minimum capital cost. The valves are automated by the inclusion of pneumatic or electric operators.

Pressure regulator and rate of flow control valves are recommended for safe operation of manually controlled treatment systems.

See Appendix B for pipe size design using the example employed for vessel and treatment media design.

3.3.1.3 Instrumentation Design

System functional requirements that are adapted to commercially available instruments should be specified. Included are:

Instrument	Range	Accuracy
1. Flow sensor (indicator/totalizer)	Varies[(a)]	±2%
2. Pressure indicator	Varies[(a)]	±1%
3. pH sensor/analyzer/alarm	0-14	±0.1
4. Level sensor/indicator	Varies[(a)]	±1%
5. Temperature indicator (optional)	30-120°F	±1%

(a) Range to be compatible with application, maximum measurement not to exceed 90% of range.

3.3.1.4 Acid Storage and Feed Subsystem

Acid feed and storage subsystems are included with treatment systems that include pH adjustment of process water only (with or without regeneration of exhausted adsorptive media.) The acid storage tank should be sized to contain tank truck bulk delivery quantities of concentrated sulfuric acid. For water systems that are not permitted to increase the sulfate concentration of the water, hydrochloric acid can be substituted. However, this acid is more costly, more difficult to handle, and results in highly corrosive treated water; therefore hydrochloric acid is not recommended. Bulk delivery provides the lowest unit price for the chemical. In small plants, acid consumption may not be enough to justify large volume purchase of chemicals. In the smaller plants, drums or even carboys may be more practical; therefore, for that type operation, the requirement for a storage tank is eliminated. A 48,000-lb tank truck delivers 3,100 gal of 66°B• H_2SO_4 (15.5 lb/gal). A 5,000-gal tank provides a 50% cushion. The example in Appendix B illustrates the method of designing the components of this system.

The sulfuric acid carbon steel storage tank does not require an interior lining; however, the interior should be sandblasted and vacuum-cleaned prior to filling with acid. The storage tank should be protected from the elements and include a containment basin located outside of the treatment building. Typically, the containment basins are sized for 110% of the capacity of the storage tank. The 66°B• H_2SO_4 freezes at –20°F. Therefore, unless the treatment plant is located in an extremely cold climate, no freeze protection is required. All piping is to be 2-inch carbon steel with threaded cast iron fittings and plug valves. Elastomer seals, seats and gaskets should be Viton®.

The acid pumps are standard diaphragm models with materials of construction suitable for 66°B• H_2SO_4 service. Standard sulfuric acid service pumps should be specified. In the preliminary design, the sizing is determined by field test or theoretical calculation (see Appendices B and C.) Acid feedrate varies with the total alkalinity and the free CO_2 content of the raw water. The feedrate is accurately determined experimentally by adjusting a raw water sample pH to 5.5 by acid titration. In a manual treatment plant operation, the operator should check the pH periodically and maintain it at 5.5. The pump stroke speed and length should be adjustable to accommodate these variations. An in-line static mixer should be installed immediately downstream of each acid injection point. This provides thorough mixing of the acid which results in an accurate pH measurement by a pH sensor located at the discharge end of the mixer. The pH probes that are used to control pH should be calibrated against standard buffers at least once per week. For treatment systems that regenerate adsorptive media an acid feed is required to lower pH of water for neutralization of a treatment bed prior to placing that bed back into treatment service after regeneration. Neutralization pH feedrate is initially set at 2.5 and increases in steps until the treatment pH of 5.5 is achieved. Finally wastewater from the regeneration of an adsorptive media bed is collected in a surge tank where the pH is adjusted to 6.5, a level at which arsenic coprecipitates with aluminum hydroxide or ferric hydroxide. An additional acid feed pump is required to feed acid to the wastewater.

3.3.1.5 Caustic Soda Storage and Feed Subsystem

The caustic soda storage tank also is sized to contain tank truck bulk delivery quantities of 50% or 25% sodium hydroxide. A 48,000-lb tank truck delivers 3,850 gal of 50% NaOH which provides a 25% cushion in a 5,000-gal storage tank. 50% NaOH freezes at 55°F; 25% NaOH freezes at 0°F. Therefore, 50% NaOH, which is preferable because of price, requires an immersion heater to prevent freezing. The caustic is used for treatment bed regeneration and neutralization of treated water. Regeneration frequency is a function of raw water arsenic concentration, flowrate and treatment media arsenic capacity. The amount of caustic required to neutralize the treated water, that is to raise the pH from 5.5 to the pH required for corrosion protection for the water system, is a function of the water chemistry at each installation. The actual caustic feedrate is easily determined experimentally by readjusting the treated water pH by titrating a sample with caustic until the desired pH is achieved. If a fraction of the raw water bypasses treatment and is blended with treated water, then the chemical required for pH adjustment is reduced. In raw water with high alkalinity the lowering of pH produces high levels of dissolved CO_2. In those waters, removal of the CO_2 by aeration raises the pH (prior to blending), providing a less expensive treatment due to reduction of caustic required to raise the pH of the treated water. In low alkalinity water, the chemical addition is less expensive. The carbon steel caustic storage tank is covered in Appendix B. This vessel should be heat-treated to stress relieve welds. The carbon steel does not require an interior lining; however, it does require sandblasting and vacuum-cleaning prior to filling. All piping is to be 2-inch carbon steel with threaded cast iron fittings and plug valves. Elastomer seals, slots and gaskets should be ethylene propylene diene monomer (EPDM).

Because 50% NaOH freezes at 55°F, it should maintain a minimum temperature of 70°F. This is handled by a temperature-controlled electrical immersion heater. Twenty-five percent sodium hydroxide freezes at 0°F; therefore, unless it is located in an extremely cold climate, freeze protection is not required. The storage tank should be placed in a containment basin inside of an enclosure outside of the treatment building.

A pump is required to feed caustic into the effluent main through an in-line static mixer where the treated water is neutralized. For regeneration, a larger caustic feed pump is required for pumping the caustic through a static mixer in the regeneration feed pipe. There the caustic is diluted to the 5% (by weight) concentration required to regenerate the adsorptive treatment media.

3.3.2 Preliminary Treatment Equipment Arrangement

Once all of the major equipment size and configuration information is available, a layout (arrangement drawing) is prepared. The layout provides sufficient space for proper installation, operation and maintenance for the treatment system as well as each individual equipment item. OSHA standards should be applied to these decisions during the equipment arrangement design stage. These requirements may be supplemented or superseded by state or local health and safety regulations, or, in some cases, insurance regulations. A compact arrangement to minimize space and resulting cost requirements is recommended. Figures 3-6, 3-7, and 3-8 illustrate typical preliminary arrangement plans. These arrangements provide no frills, but do include ample space for ease of operation and maintenance. Easy access to all valves and instruments reduces plant operator effort.

The type of building used to protect the treatment system (and operator) from the elements depends on the climate. Standard pre-engineered steel buildings are low-cost, modular units. Concrete block or other material also may be used. Standard building dimensions that satisfy the installation, operation, and maintenance space requirements for the treatment system should be selected. The building should provide access doors, lighting, ventilation, emergency shower and eye wash, and a laboratory bench with sink. All other features are optional.

When the arrangement is completed, the preliminary cost estimate is prepared.

Manual operation is the method employed in the design example in Appendix B. The basic process requirements should be reviewed at each stage of design to assure that every item required to operate the process is included. Although detail design occurs during the final design phase, provision for operator access for every equipment item should be provided. Automatic operation does not require total accessibility; access for maintenance functions for which ladder or scaffold access will suffice. The extra equipment items required solely for automatic operation (including but not limited to PLC, and operator, interface) occupy minimal space and are located in positions that are most accessible to the operator.

3.3.3 Preliminary Cost Estimate

At completion of the Preliminary Design, the preliminary cost estimate is prepared based upon the equipment

that has been selected, the equipment arrangement and the building selection. This estimate should be based on the material equipment quantities, unit prices to labor and material, and finally summarized in a format that is preferred by the owner (see Table 3-1 for example). This estimate should have an accuracy of ±20%. To assure sufficient budget for the project, it is prudent to estimate on the high side at this stage of design. This may be accomplished by means of a contingency to cover unforeseen costs, and an inflation escalation factor.

3.3.4 Preliminary Design Revisions

The Preliminary Design package (described above) then is submitted for approval prior to proceeding with the Final Design. This package may require the approval of regulatory authorities, as well as the owner. Requested acceptable changes should be incorporated and resubmit for approval. Once all requested changes are implemented and Preliminary Design approval is received, the Final Design can proceed.

3.4 Final Design

After completion and approval of the Preliminary Design by the client, the Final Design proceeds. This includes detail design of all of the process equipment and piping, complete process system analysis, complete detail design of the building including site work, and a final capital cost estimate accurate to within 10%. The deliverable items are:

1. Complete set of construction plans and specifications

2. Final capital cost estimate (See Table 3-2).

The Final Design starts with the treatment system equipment (if applicable, including the wastewater surge tank); continues with the building (including concrete slabs and foundations, earthwork excavation/backfill/compaction, heating, cooling, painting, lighting, utilities, laboratory, personnel facilities, etc.); and finishes with the site work (including utilities, drainage, paving and landscaping). The latter items apply to every type of treatment plant; although they are integral with the treatment system, they are not addressed in this manual. The only portions of the Final Design that should be addressed are the pertinent aspects of the treatment equipment which were not covered in the Preliminary Design (Section 3.3). During the Conceptual Design and Preliminary Design, the basic equipment that accomplishes the required functions were selected, sized, and arranged in a compact, efficient layout. The decision was cost-conscious, using

Table 3-2. Final Capital Cost Estimate Examples for Typical Location for Four Types of Adsorptive Media Arsenic Removal Water Treatment Plants

Location: Flowrate: 570 gpm Date:	Cost ($1,000)			
	Manual Operation w/ Media Replacement w/o pH Adjustment	**Manual Operation w/Media Replacement w/pH Adjustment**	**Manual Operation w/Media Regeneration w/pH Adjustment**	**Automatic Operation w/Media Regeneration w/pH Adjustment**
	Process Equipment			
Treatment Vessels	73	73	73	73
Treatment Media	31	31	31	31
Process Piping, Valves, and Accessories	32	36	49	64
Instruments and Controls	7	11	16	66
Chemical Storage Tanks	N/A	40	40	40
Chemical Pumps, Piping, and Accessories	N/A	6	12	13
Subtotal	143	197	221	287
	Process Equipment Installation			
Mechanical	31	43	46	51
Electrical	10	17	17	41
Painting and Miscellaneous	10	13	13	13
Subtotal	51	73	76	105
	Miscellaneous Installed Items			
Regeneration Wastewater Surge Tank	N/A	N/A	120	120
Building and Concrete	40	62	62	62
Site Work, Fence, and Miscellaneous	14	15	23	23
Subtotal	54	77	205	205
Contingency 10%	25	35	51	60
Total[a]	273	382	553	657

(a) Engineering, exterior utility pipe and conduit, wastewater and waste solids processing system, finance charges, real estate cost and taxes not included.

minimum sizes (or standard sizes) and the least expensive materials that satisfied the service and/or environment. However, in the Final Design, this effort can be defeated by not heeding simple basic cost control principles. Some of these are:

1. Minimize detail (e.g., pipe supports–use one style, one material, and components common to all sizes).

2. Minimize the number of bends in pipe runs (some bends are necessary–those that are optional only increase costs).

3. Minimize field labor; shop fabricate where possible (e.g., access platforms and pipe supports can be mounted on brackets that are shop fabricated on vessel).

4. Skid-mount major equipment items (skids distribute weight of vessels over small mat foundations in place of piers and spread footings, thereby costly foundation work is eliminated).

5. Use treatment vessels as a heat sink to provide insulated building cooling or heating or both (eliminates heating and/or cooling equipment in addition to reducing energy cost). Consideration must be given, however, to humid climates where cold tanks will result in sweating problems.

6. Simplify everything.

All subsystems should be analyzed (refer to schematic flow diagrams in Figure 3-2, 3-3, and 3-4) to account for all components in both equipment specifications and installation drawings. The drawings and specifications should provide all information necessary to manufacture and install the equipment. Extra effort to eliminate ambiguity in detail and/or specified requirements should be exercised. All items should be satisfactory for service conditions besides being able to perform required functions. Each item should be easy to maintain; spare parts necessary for continuous operation should be included with the original equipment. All tools required for initial startup as well as operation and maintenance should be furnished during the construction phase of the project. Once construction, equipment installation, and checkout are complete, the treatment plant should proceed into operation without disruption. After all components in each of the subsystems have been selected, hydraulic analysis calculations should be made to determine the velocities and pressure drops through the system. Calculations should be run for normal treatment flow and backwash flow. The latter is more severe, but of short duration. If pressure losses are excessive, the design should be modified by decreasing or eliminating losses (e.g., increase pipe size, eliminate bends or restrictions).

Upon completion of installation, functional checkout requirements should be accomplished. All piping should be cleaned and hydrostatically pressure tested prior to startup. All leaks should be corrected and retested. Recommended test pressure is 150% of design pressure. Potable water piping and vessels should be disinfected prior to startup. Disinfection procedures should be in compliance with regulatory agency requirements and material manufacturer's disinfection requirements/limitations. All electrical systems should satisfy a functional checkout. All instruments should be calibrated; if accuracy does not meet requirements stated in Section 3.3.1.3, the instruments are to be replaced.

When the plant operation begins, a check on actual system pressure drop is required. If there is a discrepancy between design and actual pressure drop, the cause should be determined (obstruction in line, faulty valve, installation error, design error, etc.) and rectified. Pressure relief valves should be tested; if not accurate, they should be adjusted or replaced. Although this activity takes place during treatment plant startup (covered in Chapter 5.0), it should be incorporated on a construction document requirement.

3.4.1 Treatment Equipment Final Design

This section provides a discussion of the details that apply specifically to arsenic removal water treatment plants.

3.4.1.1 Treatment Bed and Vessel Design

The treatment media volume was designed by determination of bed dimensions and resulting weight in the Preliminary Design (see Section 3.3.1.1). It is recommended that a minimum of 10% extra treatment media be ordered. For lowest price and ease of handling, the material should be ordered in fiber drums (approximately 5-8 ft^3) on pallets. Several sources of granular adsorptive media are available for service in the application. Specification requirements should be NSF-certified for potable water application, mesh size −28, +48 (or as recommended by media supplier), and demonstrated arsenic removal capacity.

The vessel design should be simple. The vessel should have a support system to transfer its loaded weight to the foundation and ultimately to the soil. The loaded weight includes the media, the water, attached appurtenances (platform, pipe filled with liquid, etc.), the vessel, and applicable seismic and/or wind loads. The support legs should be as short as possible, reducing head room requirements as well as cost. If the equipment is skid-mounted, the vessel legs should be integral with the skid to distribute the weight over an area greater than the dimension of the vessel. This distribution eliminates point

loads of vessel support legs, so costly piers, footings, and excavation requirements are eliminated. The skid should have provisions for anchorage to the foundation. Exterior brackets (if uniform and simply detailed) are not costly and provide supports that eliminate need for cumbersome costly field fabrications. Conversely, interior brackets, though required to anchor (or support) vessel internal distribution or collection systems, should be held to a bare minimum because they are costly to line. Epoxy (or rubber) linings with abrasion resistance qualities are recommended. Vessel interior lining should extend through vessel opening out to the outside edge of flange faces. Alternatively, vessels may be constructed of stainless steel (no lining required). Openings in the vessels should be limited to the following:

1. Influent pipe – enters vertically at center of top head.

2. Effluent pipe – exits horizontally through vertical straight side immediately above false flat bottom in front of vessel, or vertically at the center of the bottom head.

3. Air/vacuum valve (vent) – mounts vertically on top head adjacent to influent pipe.

4. Media removal – exits horizontally through vertical straight side immediately above false flat bottom at orientation assigned to this function.

5. Manway – 16-inch diameter (minimum) mounted on top head with center line located within 3 ft of center of vessel and oriented toward work platform. Manway cover to be hinged or davited.

It is recommended that pad flanges be used for pipe openings in place of nozzles. Pad flanges are flanges that are integral with the tank wall. The exterior faces are drilled and tapped for threaded studs. The pad flanges save the cost of material and labor, and are much easier to line; they also reduce the dimensional requirements of the vessel. The vessel also requires lifting lugs suitable for handling the weight of the empty vessel during installation. Once installed, the vessel should be shimmed and leveled. All space between the bottom surface of the skid structure and the foundation should be sealed with an expansion-type grout; provisions should be included to drain the area under the vessel.

The type of vessel internal distribution and collection piping used in operational arsenic removal plants is defined in the Preliminary Design (see Section 3.3.1.1). Because there are many acceptable vessel internal design concepts, configuration details will be left to sound engineering judgment. The main points to consider in the design are as follows:

1. Maintain uniform distribution

2. Provide minimum pressure drop through internal piping (but sufficient to assure uniform distribution)

3. Prevent wall effects and channeling

4. Collect treated water within 2 inches of bottom of treatment bed

5. Anchor internal piping components to vessel to prevent any horizontal or vertical movement during operation

6. Ensure that construction materials are suitable for pH range of 2.0-13.5 (PVC, stainless steel are acceptable).

Underdrain failures create significant problems; treatment media loss, service disruption and labor to repair problems are very costly. A service platform with access ladder is required for use in loading treatment media into the vessel. Handrail, toe plate, and other OSHA-required features should be included.

3.4.1.2 Pipe Design

Each piping subsystem should be reviewed to select each of the subsystem components (see Figures 3-2, 3-3, and 3-4). Exclusive of the chemical subsystem, five piping subsystems and two optional subsystems are listed in the Conceptual Design (see Section 3.2); they are:

1. Raw water influent main
2. Intervessel pipe manifold
3. Treated water effluent main
4. Raw water bypass main
5. Backwash regeneration feed main (optional)
6. Wastewater main
7. Sample panel (optional).

The detail design now proceeds for each of those subsystems. First, the equipment specification for each equipment component in each subsystem should be defined. This is followed by a detailed installation drawing, which locates each component and provides access for operation and maintenance. As each subsystem nears completion, provisions for pipe system support and anchorage, as well as for thermal expansion/contraction, should be incorporated in the detail design.

The interface where the concentrated chemical and treatment unit branch piping join is designated as a chemical injector detail. The chemical injector detail should include provisions to protect materials of construction from the heat of dilution of concentrated corrosive chemicals. The

key factor is to prevent flow of concentrated chemical when raw water (dilution water) is not flowing. The dilution water should dissipate the heat. The actual injection should take place in the center of the raw water pipe through an injector that extends from the concentrated chemical pipe. The injector material should be capable of withstanding the high heat of dilution that develops specifically with sulfuric acid and to a lesser degree with caustic soda. Type 316 stainless steel and Teflon™ are satisfactory. It also is very important that the concentrated chemical be injected upward from below; otherwise concentrated chemicals with specific gravities greater than that of water will seep by gravity into the raw water when flow stops. As described previously, the chemical pumps are to be de-energized when the well pump (or other feed pump) is not running.

The treated water pH should be monitored carefully. A pH sensor installed in the treated water main indicates the pH at an analyzer. This analyzer should be equipped with adjustable high and low level pH alarms. The alarms should be interlocked with the well pump (or other feed pump) control (magnetic starter), shutting it down when out-of-tolerance pH excursions occur. A visual and/or audio alarm should be initiated to notify the operator regarding the event.

A chemical injector detail similar to that used for acid in the treatment unit branch piping should be used in the treated water main to inject caustic in order to raise pH in the treated water. If aeration for removal of CO_2 is used in place of or in combination with caustic soda injection for raising treated water pH, then system pressure will be dissipated and the treated water will be repressurized. If the water utility has ground level storage tanks, the aeration-neutralization concept can be accomplished without need for a clearwell and repressurization. The aerator can be installed at an elevation that will permit the neutralized treated water to flow to storage via gravity.

Easy maintenance is an important feature in all piping systems. Air bleed valves should be installed at all high points; drain valves should be installed at all low points. This assists the plant operator in both filling and draining pipe systems. Air/vacuum valve and pressure relief valve discharges are to be piped to drains. This feature satisfies both operator safety and housekeeping requirements. Bypass piping for flow control, pressure control, flowmeter, and other in-line mechanical accessories is optional. Individual equipment item bypass piping is costly and requires extra space. However, if continuous treatment plant operation is mandatory, bypass piping should be included.

3.4.1.3 Instrument Design

Ease of maintenance is very important. Instruments require periodic calibration and/or maintenance. Without removal provisions, the task creates process control problems. Temperature indicators (optional) require thermal wells installed permanently in the pipe. Pressure indicators require gauge cocks to shut off flow in the branch to the instrument. pH sensing probes require isolation valves and union type mounting connections (avoids twisting of signal cables). Supply of pH standard buffers (4.0, 7.0, and 10.0) should be specified for pH instrument calibration. A laboratory bench should be located adjacent to the sample panel. The sample panel receives flow directly from sample points located in the process piping. The sample panel consists of a manifold of PVC or polyethylene tubing with shutoff valves, which allows the plant operator to draw samples from any point in the process at the laboratory bench. Laboratory equipment should be specified to include wall cabinet, base cabinet with chemical resistant counter top and integral sink, 115V/1ϕ/60Hz 20-amp duplex receptacle, laboratory equipment/glassware/reagents for analysis of pH, arsenic, and other ions. A deionized water capability for cleaning glassware and dilution of samples should be included.

3.4.1.4 Acid Storage and Feed Subsystem

Operator safety for work within close proximity of highly corrosive chemicals takes priority over process functional requirements. Emergency shower and eyewash *must* be located within 20 ft of any work area at which operator exposure to acid or caustic soda exists. Protective clothing should be specified. Neutralization materials (e.g., sodium carbonate) should be provided to handle spills. Potential spill areas must be physically contained. Containment volumes should be sufficient to completely retain maximum spillage.

Chemical bulk storage tanks are covered in the Preliminary Design.

To minimize corrosion of acid pipe material, acid flowrate is recommended to be less than 0.1 ft/sec. Threaded pipe and fittings are not recommended; tubing and Swagelok fittings are recommended. CPVC or Teflon™ are satisfactory except for their vulnerability to damage from external impact forces. Therefore protective clear reinforced plastic tubing completely containing the plastic chemical lines is recommended. Positive backflow prevention should be incorporated in each chemical feed line. Day tanks should be vented to the atmosphere, have a valved drain, and have a fill line float valve for failsafe backup control to prevent overflow. For treatment systems that use HCl instead of H_2SO_4 for pH adjustment, it is recommended that references on

materials acceptable for the handling and storing of this acid be consulted.

One acid feed pump is required for influent water pH adjustment. Acid feed pumps are required to adjust pH during neutralization following a regeneration, and to neutralize regeneration wastewater in the wastewater surge tank. Though preferable to use separate pumps for each function, it is feasible to accomplish all three functions with a single pump. The pump should be sized for a minimum of 110% of the maximum flowrate that it will provide; it should have a turndown limit no greater than 50% of the minimum required flow. Acid pump power should be interlocked with the well pump (or other feed pump) so that the acid pump is de-energized when that pump is not running. If the chemical feed pump is mounted above the day tank, a foot valve is required in the suction tube. Antisiphon provisions should be included in the system. Because considerably more acid (approximately 1 gal/ft^3 of activated alumina) is consumed during the regeneration of an activated alumina bed than during routine treatment operation, a day tank will need to be refilled several times during the neutralization phase of the regeneration. The day tank should be sized for a minimum of 200% of the daily acid consumption for the treatment process pH adjustment requirement. The day tank should be translucent with gallon calibration on the tank wall. The day tank should be set in an open-top, acid-resistant containment basin. All relevant regulatory authorities should be consulted to ensure compliance with all safety regulations.

3.4.1.5 Caustic Soda Storage and Feed System

The safety requirements stated for acid (Section 3.4.1.4) also apply to caustic soda. Vinegar should be provided to neutralize caustic spills.

The day tank and pump design features recommended for acid systems also apply to caustic. Two caustic pumps and day tanks are required. The process pH adjustment pump should be sized to pump 110% of the maximum process required. The rule of thumb for sizing the caustic soda regeneration feed pump requires provisions of 2 gal of 50% NaOH/ft^3 of activated alumina for activated alumina systems per hour. Depending upon the size of the system, a centrifugal pump or an air-operated diaphragm pump are feed pump options. The process pH adjustment day tank should be sized for 200% of the maximum daily consumption. The regeneration day tank should be the next standard tank size greater than the requirement for one regeneration. Both tanks can be set in one containment basin, sized for the largest tank. The regeneration pump can be calibrated by means of timing the flow and adjusting as necessary to arrive at the design flowrate. Carbon steel threaded pipe or PVC pipe is suitable for the service. All relevant regulatory authorities should be consulted to ensure compliance with all safety regulations.

3.4.1.6 Regeneration Wastewater Surge Tank

Although treatment and disposal of regeneration wastewater are not included in this design manual, a surge tank to receive the wastewater is indicated. The wastewater surge tank should receive the entire batch of regeneration wastewater from the start of backwash to the completion of treatment bed neutralization. To provide adequate capacity for containment of the entire batch of regeneration wastewater, this tank should be sized to contain 400 gal/ft^3 for activated alumina systems. For other adsorptive media for which media regeneration is included, the media manufacturer should provide regeneration process parameters. This tank should be a ground-level atmospheric carbon steel or PVC tank. The tank should include a carbon steel floor and roof and an interior epoxy lining. The tank should include a reinforced concrete containment structure. The tank should include fill, chemical feed, drain overflow vent, multiple discharge, and multiple sample pipe connections. The tank should include one ground-level manway and one roof manway (with safety ladder and handrails), provisions for a liquid level indicator, for an ultrasonic liquid sludge level sensor, liquid level controller, and a side entry mixer.

3.4.2 Final Drawings

All of the information required for complete installation of an arsenic removal water treatment plant should appear in the final construction drawings and specification package.

Isometric drawings for clarification of piping subsystems are recommended; these views clarify the assembly for the installer (see Figures 3-9 and 3-10). Cross-referencing drawings, notes, and specifications also is recommended.

3.4.3 Final Capital Cost Estimate

Similar to the preparation of the preliminary cost estimate, the final cost estimate is prepared based on a take off of the installed system. The estimate is now based upon exact detailed information rather than general information which was used during the preliminary estimate. The estimate is presented in the same format (see Table 3-2) and is to be accurate within ±10%. Because financial commitments are consummated at this stage, this degree of accuracy is required.

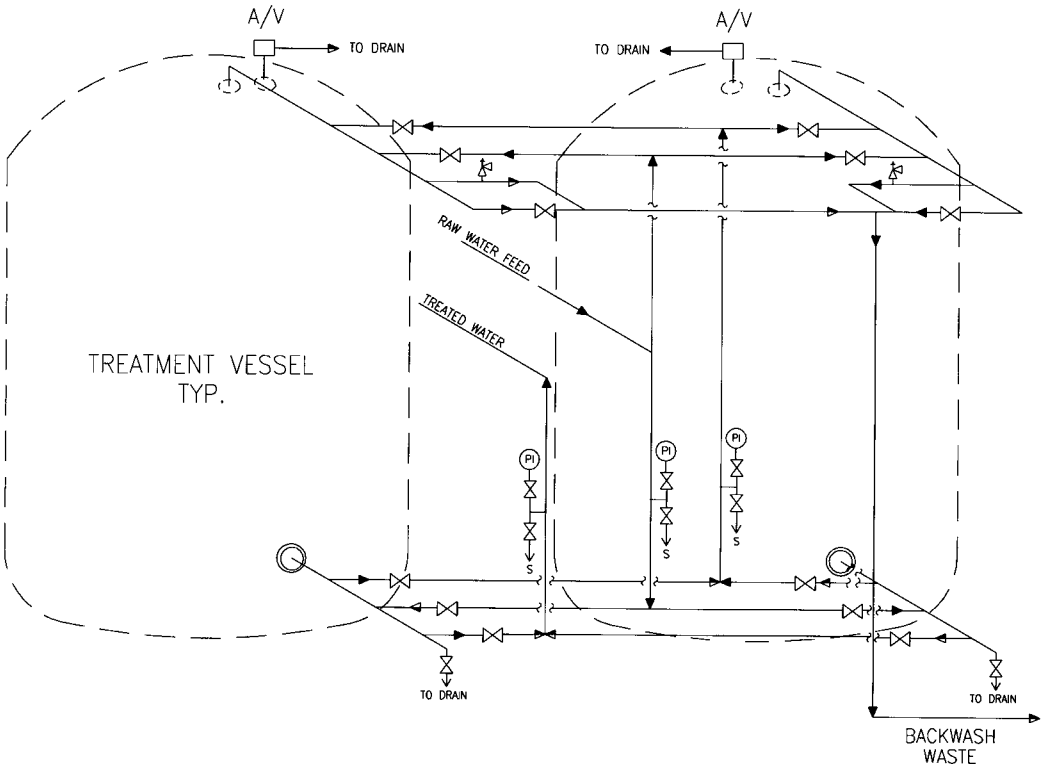

Figure 3-9. Treatment Vessels Piping Isometric Adsorptive Media With or Without Process Water pH Adjustment and With Spent Media Replacement

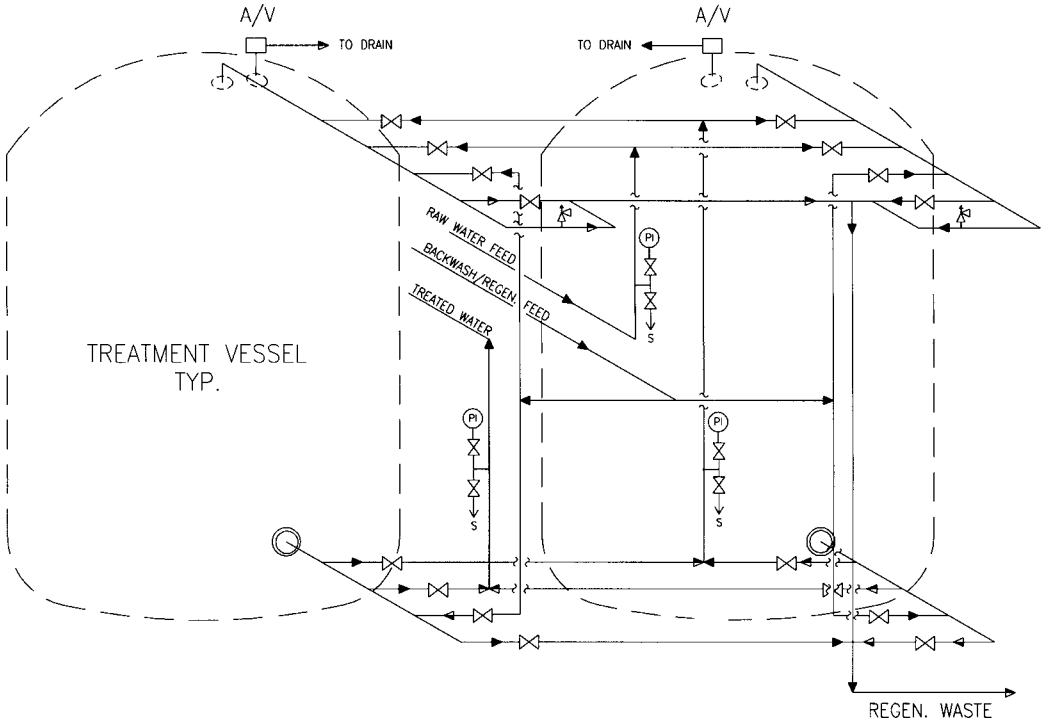

Figure 3-10. Treatment Vessels Piping Isometric Adsorptive Media With Process Water pH Adjustment and Spent Media Regeneration

3.4.4 Final Design Revisions

Upon their completion, the final construction drawings and specifications are submitted for approval to the owner and the regulatory authorities. If changes or additional requirements are requested, they should be incorporated and resubmitted for approval. If communication with the approving parties has taken place during the course of the design, then time-consuming resubmittals should not be necessary. Upon receipt of approval, the owner, with assistance from the engineer, solicits bids for the construction of the arsenic removal water treatment plant.

4.0 Central Treatment System Capital Cost

4.1 Introduction

The client should be provided with the least expensive absorptive media central treatment system that can remove the excess arsenic from a sufficient quantity of water that will satisfy all water consumption requirements. The economic feasibility evaluation should include the initial capital cost along with the operating and maintenance costs. This chapter covers the capital cost, which is affected by many factors, including operating costs.

The water treatment flowrate is the major factor affecting capital costs, but it is not the only factor. Other factors which can have varying impact upon the capital cost include, but are not limited to, the following:

1. pH adjustment process water vs. raw water without pH adjustment
2. Regeneration or replacement of spent adsorptive media
3. Backwash and regeneration wastewater disposal concept
4. Chemical supply logistics
5. Manual vs. automatic operation
6. Raw water arsenic concentration. Other chemical and physical parameters including but not limited to pH, alkalinity, iron, manganese, hardness, silica, sulfate, sodium, and turbidity.
7. Adsorptive media selected for treatment system
8. Climate (temperature, precipitation, wind, etc.)
9. Seismic zone
10. Soil conditions
11. 100-year flood plain
12. Existing and planned (future) potable water system parameters
    (i) Number of wells, location, storage, distribution
    (ii) Potable water
    (iii) Water storage (amount, elevation, location
    (iv) Distribution (location, peak flows, total flow, pressure, etc.)
    (v) Consumption (daily, annual)
13. Financial considerations (cost trends, capital financing costs, cash flow, labor rates, utility rates, chemical costs, etc.)

Once the capital cost impacts that each of the above variables can create have been determined, it becomes apparent that a cost curve (or capital cost tabulation) based on flowrate alone is inadequate. Capital cost curves are presented in Figure 4-1 for activated alumina media with and without pH adjustment of process water and with regeneration or replacement of spent media. A tabulation of the breakdown of these capital costs for this example is provided in Appendix D. If the impact of these variables on the cost curves is considered, then a meaningful preliminary project cost estimate (as described in Section 3.2, Conceptual Design) can be produced.

A user-friendly cost estimating computer program (using Microsoft Excel Visual Basic) recently has been developed by Battelle on the use of activated alumina and ion exchange for arsenic removal (Battelle, 2002). This program was funded by the U.S. EPA under Work Assignment 3-20 of Contact No. 68-C7-0008. A copy of the computer program and the associated document can be obtained from U.S. EPA National Risk Management Research Laboratory, Water Supply and Water Resources Division, in Cincinnati, OH, 45268.

4.2 Discussion of Cost Variables

Each of the variables mentioned above has direct impact upon the total installed cost for a central treatment

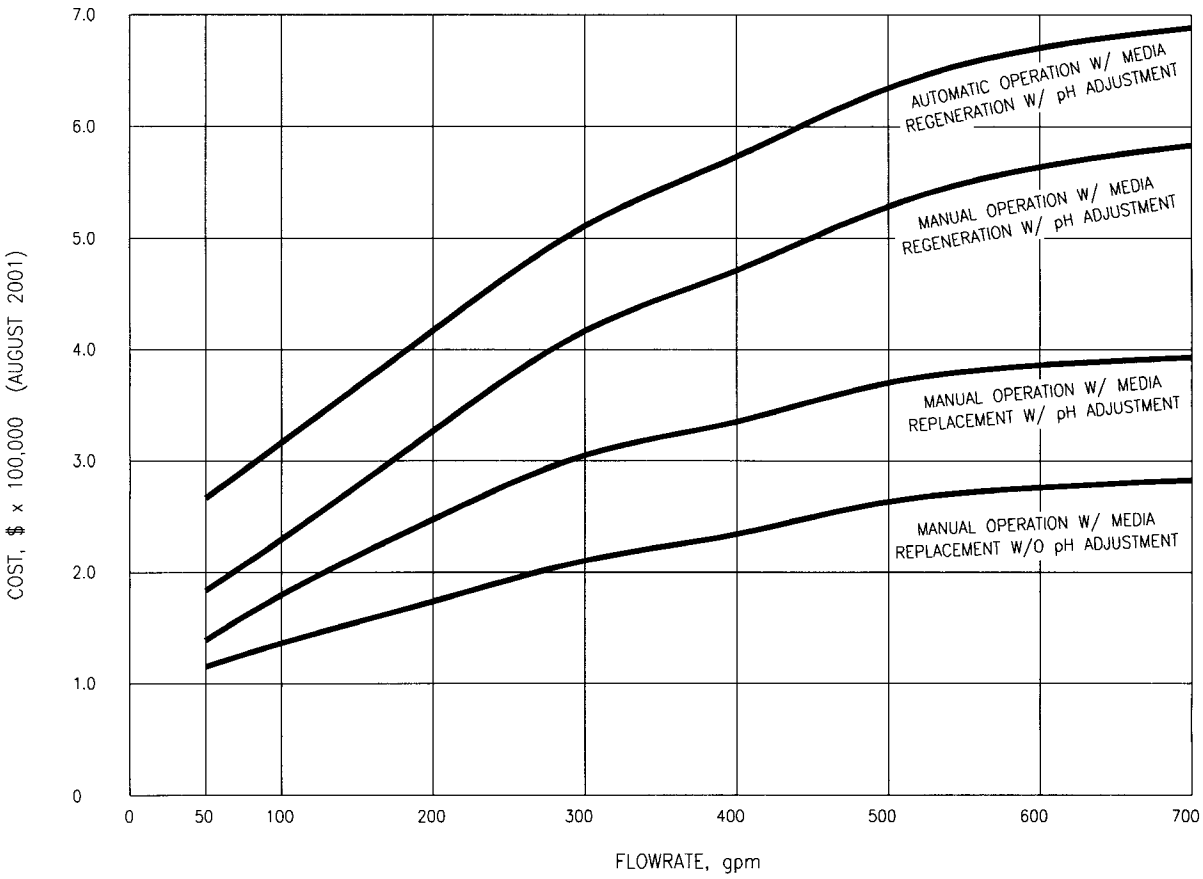

Figure 4-1. Capital Cost vs. Flowrate at Typical Locations for Arsenic Removal Water Treatment Plants by Means of the Activated Alumina Process

system. Ideally, conditions could exist in which a minimum cost system can be designed. Comparable capital cost curves are provided in Figure 4-1 for treatment systems in typical locations and in Figure 4-2 for treatment systems in ideal locations. A hypothetical example of an ideal situation would resemble the following:

1. Raw water quality presents no problem (moderate temperature, low alkalinity, low concentrations of competitive ions, etc.)

2. Warm moderate climate (no freezing, no high temperature, minimal precipitation, no high wind)

3. No seismic requirements

4. Existing concrete pad located on well compacted, high-bearing capacity soil

5. Single well pumping to subsurface storage reservoir with capacity for peak consumption day

6. Existing wastewater disposal capability adjacent to treatment site (e.g., a large tailings pond at an open pit mine)

7. Acid and caustic stored in large quantities on the site for other purposes

8. Manual operation by labor that is normally at the site with sufficient spare time

9. Funding, space, etc. available.

This ideal situation never exists in reality. Occasionally one or more of the ideal conditions occur, but the frequency is low. If the final estimate for the example used in Appendix B is revised to incorporate the above ideal conditions, the cost estimate would be reduced from $553,000 to $278,000 (see Table 4-1). Conversely, adverse conditions could accumulate, resulting in a cost far in excess of that for the typical treatment system for the same treatment capability. The following subsections provide the basic insight needed to benefit from the above variables.

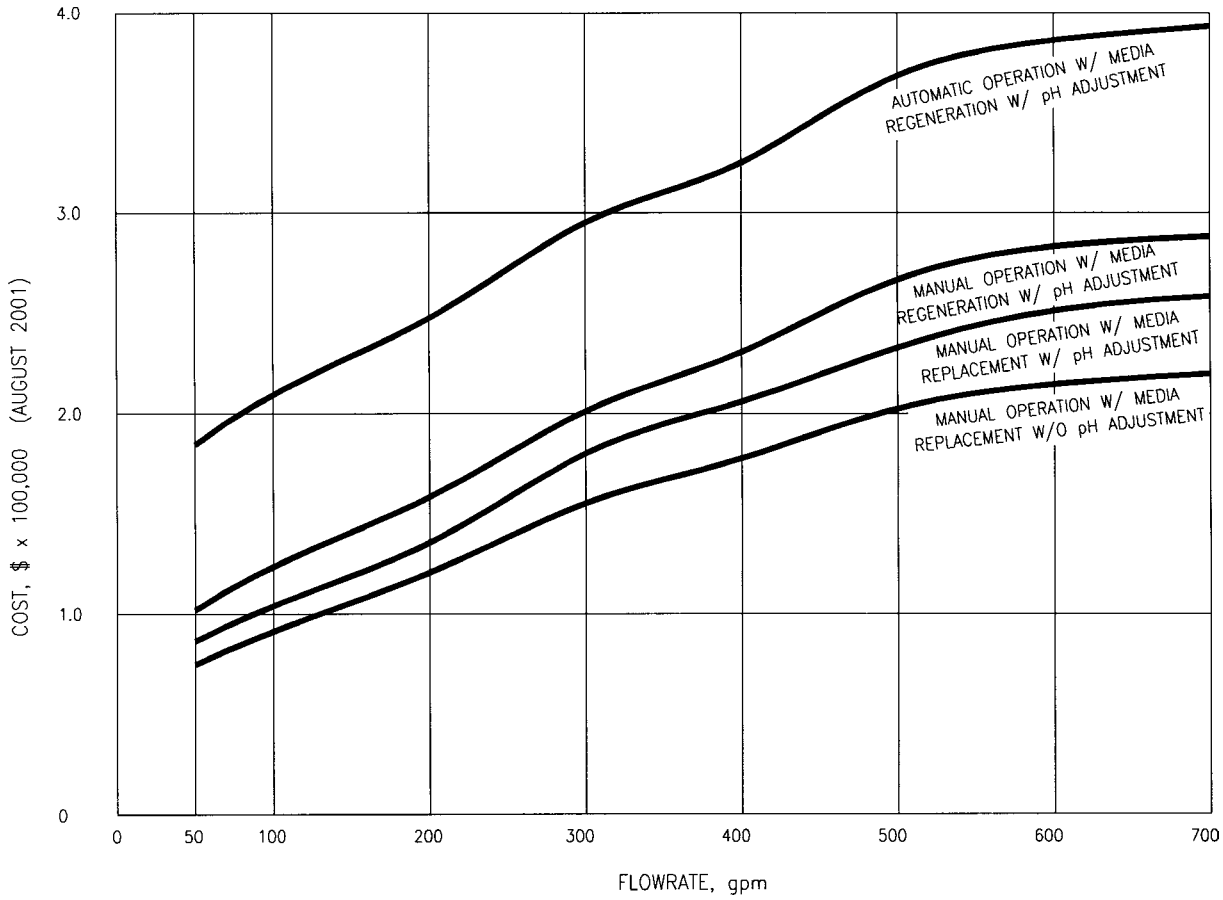

Figure 4-2. Capital Cost vs. Flowrate at Ideal Locations for Arsenic Removal Water Treatment Plants by Means of the Activated Alumina Process

4.2.1 Water Chemistry

The water chemistry can affect capital as well as operating costs. With a clear picture of the raw water quality, its possible variations, and its adverse characteristics, the effect upon the capital cost can be determined readily. High water temperature (greater than 100°F) requires higher cost piping material and/or pipe support. Varying water temperature requires inclusion of special provisions for thermal expansion and contraction. Very high arsenic may require larger treatment units to reduce the frequency of regeneration. High alkalinity requires higher acid consumption for pH adjustment resulting in larger feed pumps, day tank, piping, etc. This might result in an aeration step for post treatment pH adjustment in place of caustic addition. High turbidity arsenic, iron, manganese, suspended solids, and/or other contaminants can require the addition of pretreatment steps to accomplish removal prior to arsenic removal, or the implementation of a different arsenic removal treatment method.

Each of the physical and chemical characteristics of the raw water should be evaluated. The technical as well as the economical feasibility for the entire project could hinge on these factors.

4.2.2 Climate

Temperature extremes, precipitation, and high wind will necessitate a building to house the treatment system equipment. High temperature along with direct sunlight adversely affects the strength of plastic piping materials. Freezing is obviously damaging to piping and in some extreme cases also to tanks. Temperature variation introduces requirements for special thermal expansion/contraction provisions. A building with heating and/or cooling and adequate insulation will eliminate these problems and their costs, but will introduce the cost of the building. The building cost should reflect wind loads as well as thermal and seismic requirements. Operator comfort in place of economic considerations may dictate building costs.

Table 4-1. Final Capital Cost Estimate Example for Ideal Location for Four Types of Adsorptive Media Arsenic Removal Water Treatment Plants

Location:
Flowrate: 570 gpm
Date:

	Cost ($1,000)			
	Manual Operation w/Media Replacement w/o pH Adjustment	**Manual Operation w/Media Replacement w/pH Adjustment**	**Manual Operation w/Media Regeneration w/pH Adjustment**	**Automatic Operation w/Media Regeneration w/pH Adjustment**
Process Equipment				
Treatment Vessels	73	73	73	73
Treatment Media	31	31	31	31
Process Piping, Valves, and Access.	32	36	49	64
Instruments and Controls	7	11	16	66
Chemical Storage Tanks	N/A	0	0	0
Chemical Pumps, Piping, and Access.	N/A	6	12	13
Subtotal	143	157	181	247
Process Equipment Installation				
Mechanical	29	40	43	48
Electrical	5	12	12	36
Painting and Miscellaneous	8	11	11	11
Subtotal	42	63	66	95
Miscellaneous Installed Items				
Regeneration Wastewater Surge Tank	N/A	N/A	0	0
Building and Concrete	5	5	5	5
Site Work, Fence, and Miscellaneous	0	0	0	0
Subtotal	5	5	5	5
Contingency 10%	19	23	26	35
Total[(a)]	209	248	278	382

(a) Engineering, exterior utility pipe and conduit, wastewater and waste solids processing system, finance charges, real estate cost and taxes not included.

The installation costs for the buildings and regeneration wastewater surge tank along with their associated civil work becomes a major portion of the overall capital cost. Care in interpreting the climatological conditions and their requirements is necessary.

4.2.3 Seismic Zone

Compliance with the seismic design requirements of the local building codes can impact capital costs. Buildings and tall slender equipment are vulnerable to seismic loads. The magnitude of seismic design requirements should be determined. In zones of extreme seismic activity, low profile equipment and buildings are recommended.

4.2.4 Soil Conditions

Unless soil-boring data are already available for the treatment system site, at least one boring in the location of the foundation for each heavy equipment item (treatment vessels, chemical storage tanks, and regeneration wastewater surge tank) is required. If the quality of the soil is questionable (fill, or very poor load-bearing capacity), additional soil borings should be obtained. Poor soil may require costly excavation/backfill and foundations.

Combinations of poor soil with rock or large boulders can make foundation work more complex and costly. Rock and boulders in combination with extreme temperatures can result in very high installation costs for subsurface raw, treated, and wastewater pipe mains.

4.2.5 100-Year Flood Plain

For water treatment facilities located within a 100-year flood plain, the entire site should be relocated to another site outside of the 100-year flood plain, be elevated 3 ft above the 100-year flood plain level, or be protected on all sides by an armored berm that extends a minimum of 3 ft above the 100-year flood plain level.

4.2.6 Existing and Planned (Future) Water System Parameters

Many existing and planned (future) facility configurations can either significantly increase or decrease the capital cost. The most important factors are discussed in this section.

4.2.6.1 Number and Location of Wells

When only one well requires treatment, the removal of arsenic should be accomplished prior to entering the distribution system. Theoretically, treatment can occur before or after entering storage. Practically speaking, treatment prior to entering storage is much easier to control because the treatment plant flowrate will be constant. If treatment takes place after storage, or if there is no storage, flowrate is intermittent and variable, and pH control is only achievable for a sophisticated automatic pH control/acid feed system.

When more than one well requires treatment, a decision is required regarding whether a single treatment plant treating water from all wells manifolded together or individual treatment plants at each well present a more efficient and cost-effective concept. Factors such as distance between wells, distribution arrangement, system pressure, and variation in water quality should be evaluated in that decision. If all of the wells are in close proximity and pump similar quantity and quality water, a single treatment plant serving the entire system is preferable. When wells are widely dispersed, manifolding costs become prohibitively expensive, thus dictating implementation of individual treatment plants at each well. Frequently, the distances may be such that the decision is not clear cut; then other variables such as water quality, system pressure, distribution configuration, land availability should be evaluated.

Systems that require multiple treatment plant installations can achieve cost savings by employing an identical system at each location. This results in an assembly line approach to procurement, manufacture, assembly, installation, and operation. Material cost savings, labor reduction and engineering for a single configuration will reduce the cost for the individual plant.

4.2.6.2 Potable Water Storage Facilities

Similar to the wells, the number, size, and location of storage tanks can affect treatment plant size (flowrate) and capital cost. If there is no storage capacity in the system, the well pump should be capable of delivering a flowrate equal to the system momentary peak consumption; this could be many times the average flowrate for a peak day. Therefore, if no storage capacity exists, a storage tank should be added with the treatment system for treatment water storage. Otherwise, automatic pH instruments and controls will be required to pace pH adjustment chemical feedrates to the varying process water flowrate.

Most systems have existing storage capacity. The storage may be underground reservoirs, ground level storage tanks, or elevated storage tanks (located on high ground or structurally supported standpipes). The first two require repressurization; the latter does not. The elevated storage tanks apply a backpressure on the ground level treatment system requiring higher pressure (more costly) construction of treatment vessels and piping systems. If aeration of treated effluent for pH adjustment is selected with an elevated storage tank, the treated water should be contained in a clearwell and repumped to storage. However, the treatment system vessels and piping may be low-pressure construction. When storage is at or below ground level storage, loss of system pressure is not a factor.

The amount of storage capacity also affects treatment system cost. The larger the storage capacity (within limits), the lower the required treatment plant flowrate (and resulting cost). A minimum storage capacity of one-half of system peak day consumption is recommended.

4.2.6.3 Distribution and Consumption

The factors that determine the sizing of the treatment system are the well (or feed) pump flowrate, the storage capacity, and the system consumption characteristics. Those features should be coordinated to provide a capacity to deliver a peak treated water supply to satisfy all possible conditions of peak consumption. If there is adequate storage capacity, the momentary peaks are dampened out. The peak day then defines the system capacity. The well (or feed) pump then is sized to deliver the peak daily requirement. The treatment system in turn is sized to treat a minimum of what the well (or feed) pump delivers.

The distribution system may anticipate future growth or increased consumption. The well (or feed) pump then either should pump a flow equal to or greater than the maximum anticipated peak daily flows, or should be able to adjust to future increased flowrate. The treatment plant in turn should incorporate capacity to treat the ultimate peak flowrate or include provisions to increase the treatment capacity in the future.

4.2.7 pH Adjustment of Process Water Included vs. Not Included

The decision should be made regarding whether or not to include treatment process pH adjustment by means of acid (to lower pH) and caustic (to raise pH). The purpose of including pH adjustment for some adsorptive media such as activated alumina is to significantly increase the arsenic removal capacity. A one-time capital cost increase is required for chemical feed and storage subsystems as well as constant increased operating cost for consumable acid and caustic, and addition of sulfate, sodium, and TDS to the treated water. However, the pH

adjustment method may be the most cost-effective method of removing arsenic from water due to the significant increase of treatment cycle life for the treatment media. This is the key to use of adsorptive media with treatment process pH adjustment, regardless of whether the adsorptive media is replaced or regenerated. The material manufacturer should be consulted for technical information relating to the process improvement resulting from the addition of pH adjustment to the treatment process. The decision should relate to characteristics of the adsorptive media and the water analysis for each individual application. Pilot studies also can provide information to aid in the decision.

4.2.8 Regeneration or Replacement of Spent Adsorptive Media

Regeneration should not be included for spent adsorptive media unless the treatment process also includes pH adjustment of process water. Unless the treatment process already includes chemical feed and storage subsystems for the treatment process pH adjustment, adding those subsystems only for media regeneration is not economically feasible.

Chemical regeneration of adsorptive media that is saturated with arsenic is economically sound for large systems with high arsenic concentrations. As the size of the system is decreased, and/or the raw water arsenic concentration is decreased, the economic benefit compared to the capital and operating cost is diminished. For very small systems, the design may include the use of portable tanks that are removed and replaced with new media. In this situation, the media is likely to be regenerated at the vendor's facility and reused.

4.2.9 Backwash and Regeneration Disposal Concept

Regeneration wastewater and waste solids processing and disposal is not included in the scope of this document. Depending on wastewater discharge limits established by the U.S. EPA, state and local regulatory agencies, wastewater disposal is a significant cost item that should be evaluated in the capital (and operating) cost projection. Requirements can vary from zero discharge to discharge into an available existing receiving facility. Disposal and/or discharge can be accomplished by chemical coprecipitation of arsenic with precipitated aluminum or ferric hydroxide by adjustment of pH to 6.0-6.5 and dewatering of precipitated suspended solids. The dewatered solids should pass the U.S. EPA TCLP. The wastewater, though containing low arsenic concentrations, will contain elevated levels of TDS, sodium, and sulfate. If regulatory agency permits disposal by conventional methods (surface discharge, percolation), the disposal costs are not large. The total volume of wastewater regeneration generally is 300-400 gal/ft^3 of adsorptive media. With pH adjustment, the activated alumina process can achieve 10,000 (74,800 gal/ft^3) to 25,000 (187,000 gal/ft^3) bed volumes of treated water depending on the arsenic concentration in the raw water. Therefore, the ratio of wastewater to treated water is insignificant (<<1%).

In the event a zero discharge of wastewater is required, the wastewater supernatant and filtrate (from solids dewatering) should be fed back to the head of the treatment plant and very slowly added to the raw water. The dewatered solids containing nearly all of the arsenic are then removed for disposal. Although this concept has not been incorporated in a full-scale treatment plant, it has been successfully accomplished on a pilot scale by the author.

4.2.10 Chemical Supply Logistics

Sulfuric acid (normally 66°B• H_2SO_4) and caustic soda (normally 50% NaOH) are commercially available and are usually the least expensive chemicals to use for pH adjustment. Other chemicals such as hydrochloric acid and caustic potash (KOH) are technically acceptable, but almost always more costly, and therefore are not commonly used. The acid and caustic are much cheaper when purchased in bulk quantities, usually 48,000-lb tank trucks. In very small plants, the cost of storage tanks for those volumes is not justified and therefore, smaller volumes with higher unit prices are procured (drums and carboys). In very large treatment plants, cost can be lowered by procuring the chemicals via 200,000-lb railroad tank cars. However, this approach requires a rail siding and rail unloading facility; nevertheless, it does present an option of lowering the overall cost. A chemical unloading rail terminal presents another intriguing option for facilities with multiple treatment plants. In this approach, smaller site storage tanks are supplied via "mini tank trucks" relaying chemicals to the treatment site from the rail terminal. This brings down the size (and cost) of chemical storage tanks at each site. However, this could increase the truck traffic of corrosive chemicals through populated areas, a risk that may not be acceptable.

4.2.11 Manual Versus Automatic Operation

Automatic operation is technically feasible. However, the periodic presence of an operator is always required. The capital cost of automation (computer hardware/software, valve operators, controls, instrumentation, etc.) as well as maintenance costs may exceed budget limits that the client will accept. Therefore, either manual or semiauto-

matic operation is normally furnished. The advantages and disadvantages of manual, automatic and semiautomatic operation require careful evaluation prior to determination of the proper selection.

4.2.12 Financial Considerations

Many financial factors should be considered by the designer and the client. The client can superimpose financial restrictions (beyond any of the technical factors mentioned above) which result in increased (or decreased) capital cost. These include, but are not limited to, the following: inflationary trends, interest rates, financing costs, land costs (or availability), cash flow, labor rates, electric utility rates, and chemical costs. All or some of these factors could affect the capital investment with reduced operating cost because interest rates are low, inflation is anticipated, cash is available, and labor and electric utility rates are high; or the opposite can be true. The varying combinations of factors that could develop are numerous; each one will affect the ultimate capital cost.

4.3 Relative Capital Cost of Arsenic Removal Central Water Treatment Plants Based on Flowrate

The relative capital costs of activated alumina central treatment plants based on the treated water flowrate are presented in Figures 4-1 and 4-2. Both cost curves are based on the same treatment system design criteria. Tabulations of the breakdowns of the capital costs for both curves are provided in Appendix D. The curve in Figure 4-1 is based on the facility criteria employed in the hypothetical design for the 570-gpm treatment arsenic system in Appendix B. The curves in Figure 4-2 are based on the “ideal” facility requirements presented earlier in this chapter for the same treatment system (see Table 4-1). This information demonstrates the dramatic differences in capital cost that can occur for the same treatment plant in different circumstances. The costs related to the curve in Figure 4-1 are representative of average capital costs. Examples of some of the equipment, material and labor cost proposal and estimating items employed in Figures 4-1 and 4-2 are included in Figure 4-3 and Tables 4-2 and 4-3.

CODE PRESSURE VESSEL FABRICATOR QUOTATION
FOR ADSORPTIVE MEDIA TREATMENT VESSELS (two required)

Vessel Specification and Quotation #1280m 07/24/01
Customer
Attention
R.F.Q. Pricing for your Arsenic Removal Water Treatment Project

Description	Vertical Skid-Mounted Vessel
Size	120" O.D. × 8'0" S/S; Capy, 5,450 gal
Design Pressure and Temp	50 PSIG @ 175° Fahrenheit
Corrosion Allowance	None requested or provided
Design Criteria	A.S.M.E. Section VIII, Div. 1
Radiography	Spot (RT-3)
Code Stamp	Yes and National Board Registration
Constructed of	Carbon steel
Supports	(4) carbon steel legs with skid to provide 24" to bottom seam

Nozzles and Appurtenances:

2	20" quick opening manway
1	4" CL150 FF single-tapped pad flange, hillside-type
1	4" CL150 FF single-tapped pad flange
2	8" CL150 FF single-tapped pad flanges
1	False bottom
8	Interior carbon steel lateral support clips
1	Interior carbon steel header support clip
2 sets	Exterior pipe support brackets
2	Lifting lugs
1	Uncaged ladder from grade to top head
1	Skid

Valves, gauges, gaskets, or any items not listed above are excluded.

Surface Preparation and Coatings:
Interior surface prep: SSPC-SP-5 White metal sandblast
Interior surface coat: Plasite 4006 (35 MDFT)
Exterior surface prep: SSPC-SP-6 commercial sandblast
Exterior surface primer: Rust inhibitive primer
Exterior topcoat: None requested or provided
Note, interior coating is forced cured to meet NSF 61 requirements for potable water

Shipping: Weight, 9,500 lb; Dims., 10' diameter × 12.5' OAL.

Price: FOB Madera CA, $ 27,500.00 each, not including taxes.
Price based on a quantity of 2, and is valid for 90 days.

Delivery Schedule: Based upon current schedule.
Drawings for approval: 2 weeks after order.
Fabricate and ship: 12 to 14 weeks after drawing approval.

Terms: Progress payment to be arranged.

Figure 4-3. Code Pressure Vessel Fabricator Quotation for Adsorptive Media Treatment Vessels

Table 4-2. Process Pipe, Fittings, Valves, and Static Mixers – Itemized Cost Estimate[a]

Item	Quantity	Material Unit Price[b] ($)	Total Material ($)	Labor Unit Price[c] ($)	Total Labor ($)	Total ($)
8" Schedule 80 PVC Pipe (P/E)	400 ft	8.00/ft	3,200	5.00/ft	2,000	5,200
8" Schedule 80 PVC Coupling (s × s)	8	50 ea.	400	12.50 ea.	100	500
8" Schedule 80 PVC Tee (s × s × s)	30	170 ea.	5,100	15.00 ea.	450	5,550
8" Schedule 80 PVC 90° ELL (s × s)	18	120 ea.	2,160	12.50 ea.	225	2,385
8" Schedule 80 PVC Van Stone Flange(s)	66	55 ea	3,630	12.50 ea.	825	4,455
8" Wafer Style PVC Butterfly Valve with EPDM Seals	25	280 ea	7,000	50.00 ea.	1,250	8,250
8" PVC Wafer Style Check Valve with EPDM Seals	3	650 ea.	1,950	100.00 ea.	300	2,250
8" PVC In-Line Static Mixers	4	1,700 ea.	6,800	100.00 ea.	400	7,200
Totals			30,240		5,550	35,790[d]

(a) Manually operated 570 gpm arsenic removal water treatment system with treatment process pH adjustment and spent media regeneration.
(b) Prices effective August 2001 (markup included).
(c) Labor rate @ $50/hr.
(d) Tools, installation equipment, pipe supports, accessories, bolts, nuts, gaskets, mobilization, material storage, etc. not included.

Table 4-3. Chemical Feed Pumps, and Static Mixers – Itemized Cost Estimate[a]

Item	Quantity	Material Unit Price[b] ($)	Total Material ($)	Labor Unit Price[c] ($)	Total Labor ($)	Total ($)
Acid feed pumps for 66°B• H_2SO_4 for adjustment of raw water pH for potable water treatment. Chemical metering pump will be positive displacement. A bleed valve will be provided for the manual evacuation of entrapped vapors and safe relief of pressure in the discharge line. Flowrate 0-2.5 gph. Turndown 1,000:1. Pressure: 50 psig (max). Suction lift: 6•0• (min.) for acid. Temperature 70°F–90°F. Materials of construction: PVDF pump head, housing, suction tubing, discharge tubing and bleed valve, Teflon®-faced Hypalon® diaphragm, Teflon® seats and o-rings, ceramic ball checks. Includes: injector, foot valve, suction and discharge tubing. Connections: □-inch I.D. tubing.	1	900 ea.	1,100	400 ea.	400	1,500
Acid feed pumps for 66°B• H_2SO_4 for raw water pH adjustment for neutralization of regenerated treatment media for pH adjustment of regeneration wastewater. Chemical feed pump to be air-operated diaphragm type. Size: ½-inch self-priming. Pump to include compressed air supply filter/regulator. Flowrate 1-4 gpm. Suction lift: 6•0• (min.) for sulfuric acid. Discharge pressure: 50 psig (max.) Temperature 70°F–90°F. Air pressure: 100 psi (max.) Materials of construction: Kyner body. Teflon™ diaphragms and check valves. Connections: Sulfuric acid – ½-inch NPT, Compressed air – ¼-inch NPT. Self-lubricating.	2	650 ea.	1,300	400 ea.	800	2,100
Caustic soda feed pumps for 50% NaOH for adjustment of treated water pH. Chemical metering pump will be positive displacement diaphragm type pump. A bleed valve will be provided for the manual evacuation of entrapped air or vapors and safe relief of pressure in the discharge line. Pump control will be manual. The electronic circuitry will be EMI-resistant and will employ a metal oxide varistor for lightning protection. Flowrate 0-5 gph. Turndown 1,000:1. Pressure: 100 psig (max). Suction lift: 6•0• (min.) for caustic soda. Temperature 70°F–90°F. Materials of construction: Glass-filled polypropylene pump head, housing, and bleed valve, Teflon®-faced Hypalon® diaphragm, Teflon® seats and o-rings, ceramic ball checks. Includes: injector, foot valve, suction and discharge tubing. Connections: •-inch I.D. tubing.	1	1,100 ea.	1,100	400 ea.	400	1,500
Caustic soda feed pump for 50% NaOH for raising feedwater pH for regeneration of treatment media. Chemical feed pump to be air-operated diaphragm type. Size: ¾-inch self priming. Pump to include compressed air supply filter/regulator. Flowrate 4-7 gpm. Suction lift: 6•0• (min.) for caustic soda. Discharge pressure: 50 psig (max.) Temperature 70°F–90°F. Air pressure: 100 psi (max.) Materials of construction: Polypropylene body. Teflon® diaphragms and check valves. Connections: Caustic – ¾-inch NPT, Compressed air – ¼-inch NPT. Self-lubricating.	1	750 ea.	750	400 ea.	400	1,150
Totals			3,250		2,000	5,250

(a) Manually operated 570 gpm arsenic removal water treatment system with treatment process pH adjustment and spent media regeneration.
(b) Prices effective August 2001 (markup included).
(c) Labor rate @ $50/hr.

5.0 Treatment Plant Operation

5.1 Introduction

Upon completion and approval of the final design package (plans and specifications), the owner (client) proceeds to advertise for bids for construction of the treatment plant. The construction contract normally is awarded to the firm submitting the lowest bid. Occasionally, circumstances arise that disqualify the low bidder, in which case the lowest qualified bidder is awarded the contract. Upon award of the construction contract, the engineer may be requested to supervise the work of the construction contractor. This responsibility may be limited to periodic visits to the site to assure the client that the general intent of the design is being fulfilled; or it may include day-to-day inspection and approval of the work as it is being performed. The engineer should review and approve all shop drawings and other information submitted by the contractor and/or subcontractors and material suppliers. All acceptable substitutions should be approved in writing by the engineer. Upon completion of the construction phase of the project, the engineer normally is requested to perform a final inspection. This entails a formal approval indicating to the owner that all installed items are in compliance with the requirements of the design. Any corrective work required at that time is covered by a punch list and/or warranty. The warranty period (normally one year) commences upon final acceptance of the project by the owner from the contractor. Final acceptance usually takes place upon completion of all major punch list items.

Preparation for treatment plant startup, startup and operator training may or may not be included in the construction contract. Although this area of contract responsibility is not germane to this manual, the activities and events that lead up to routine operation are. This chapter discusses those steps in the sense that the operator is performing them. The operator could be the contractor, the owner's representative, or an independent third party.

System operating supplies, including treatment chemicals, laboratory supplies, and recommended spare parts should be procured, and stored on site. The treatment plant operating and maintenance instructions (O&M Manual) should be available at the project site. Included in the O&M Manual are the valve number diagram which corresponds to brass tags on the valves (see Figure 5-1), a valve directory furnished by the contractor, and a valve operation chart (see Table 5-1).

The filter vessel and piping should be disinfected in accordance with American Water Works Association (AWWA) standard procedures. The treatment bed material then is placed in the treatment vessels and the plant is ready to start operation.

For systems that regenerate spent adsorptive media, there are four basic modes of operation: treatment, backwash, regeneration, and neutralization. Operating details for each of these modes are covered in this chapter. It is important to note that each of the above modes uses raw water during each operation.

For systems that replace spent adsorptive media, there are two basic modes of operation: treatment, and replacement of spent media. The latter mode consists of removal of spent media, and placement and conditioning of new media (per initial startup as described in Section 5.2). The removal of spent adsorptive media can be accomplished by various methods. Because the spent adsorptive media is already wet, the simplest method is accomplished by flushing the adsorptive media in a water slurry out of the treatment vessel, through a valved media removal nozzle located in the side of the vessel immediately above the false flat bottom, and into a containment vessel. The containment vessel should be portable for transport to a disposal site. The containment vessel also should incorporate screened drains to permit transfer water to drain from the spent media in the containment vessel. The containment vessel should be capable of holding 150% of the volume of the spent adsorptive media. Spent media removal from the treatment vessel also can be accomplished by manual means, vacuum equipment, and other pneumatic transfer systems. Examples of several other removal methods are given in Appendix E.

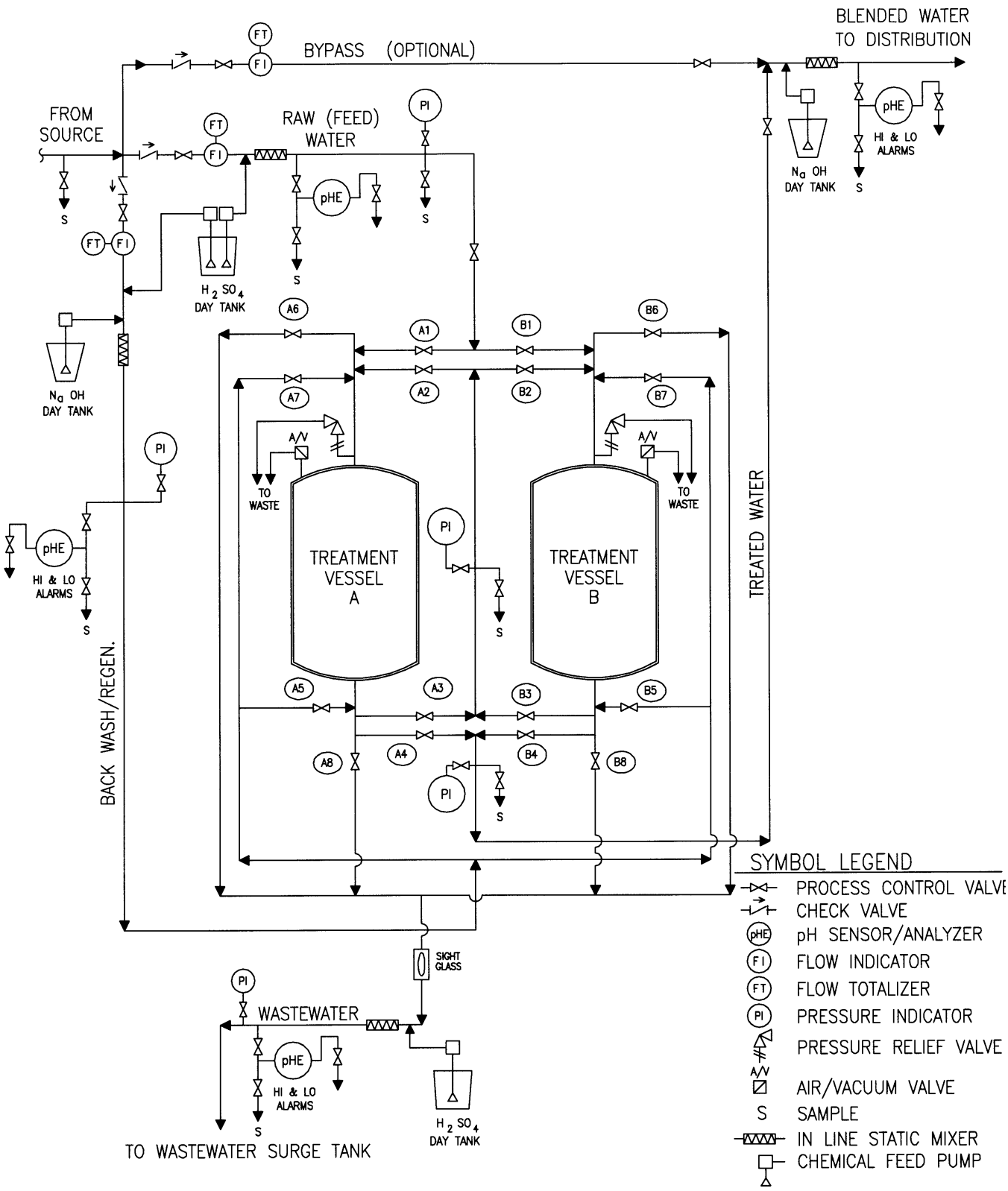

Figure 5-1. Valve Number Diagram

Table 5-1. Valve Operation Chart for Treatment Vessels in Spent Adsorptive Media Regeneration Operational Modes[(a)]

Mode	Valve No. 1	2	3	4	5	6	7	8	Regeneration Chemicals: Caustic	Acid
Treatment – lead position	•	x	•	x	x	x	x	x	x	x
Regeneration										
Drain	x	x	x	x	x	x	x	•	x	x
Backwash	x	x	x	x	•	•	x	x	x	x
Drain	x	x	x	x	x	x	x	•	x	x
Upflow regeneration	x	x	x	x	•	•	x	x	•	x
Upflow rinse	x	x	x	x	•	•	x	•	x	x
Drain	x	x	x	x	x	x	x	•	x	x
Downflow regeneration	x	x	x	x	x	x	•	•	•	x
Downflow rinse	x	x	x	x	x	x	•	•	x	x
Downflow neutralization pH 2.5	x	x	x	x	x	x	•	•	x	•
Downflow neutralization pH 4.0	x	x	x	x	x	x	•	•	x	•
Downflow neutralization pH 5.5	x	x	x	x	x	x	•	•	x	•
Treatment										
Treatment – lag position	x	•	x	•	x	x	x	x	x	x
Treatment regeneration other vessel	•	x	x	•	x	x	x	x	x	x
Treatment – lead position	•	x	•	x	x	x	x	x	x	x

(a) Refer to Figure 5-1 for valve location.
Legend: x = valve closed; • = valve open.

Vessel A

Valve No.	
A1	Feedwater
A2	Feed from Vessel B
A3	Treated to Vessel B
A4	Treated water (to distribution)
A5	Regeneration upflow feed
A6	Regeneration upflow waste
A7	Regeneration downflow feed
A8	Regeneration downflow waste

Vessel B

Valve No.	
B1	Feedwater
B2	Feed from Vessel A
B3	Treated to Vessel A
B4	Treated water (to distribution)
B5	Regeneration upflow feed
B6	Regeneration upflow waste
B7	Regeneration downflow feed
B8	Regeneration downflow waste

5.2 Adsorptive Media Initial Startup

The operator should thoroughly review the O&M Manual, become familiarized with every component of the plant, and resolve any questions that arise.

The placement of the adsorption media in the treatment vessel, which takes place immediately prior to initial startup or during replacement of spent media, is a critical step in the future system performance. The dry material usually is delivered in drums or sacks. The volume of the media is determined on a dry weight basis. The actual density varies with the degree of packing of the bed. Unless instructed otherwise by the manufacturer, 45 lb/ft^3 is a suggested media density for use in weight calculations for activated alumina. For media density of other adsorptive media, consult the manufacturer. The virgin granular activated alumina material is “coated” with caustic. A small amount of fines can become airborne and are irritating to the personnel who are handling them. Eye, skin, and inhalation protection are recommended during vessel loading activity.

The vessel should be half-filled with water prior to placing the alumina through a manway in the top head of the vessel. As activated alumina is carefully distributed into the vessel from the top, heat is generated by the wetting of the caustic “coating” on the alumina grains. The water in the tank dissipates this heat, thereby preventing cementing of the bed. The water also separates the fines from the granular materials, protects the underdrain assembly from impact, and initiates stratification of the bed. It is recommended that the bed be placed in two or three lifts. In the two-bed treatment system, alternate placing of media and backwashing steps can be worked together between the two treatment units. Thereby, media placement can be a continuous operation. The bed should be thoroughly backwashed with raw water after each lift. The backwash rate should be adjusted to provide 50% bed expansion. For activated alumina, this is typically 7 gpm/ft^2 except for extremely warm or cold water for which flowrates may have to be adjusted up or down respectively. During bed placement, each backwash step should be a minimum of 30 min and, depending on the quantity of fines in the media, could extend to 2 hr. The purpose of this stringent effort is to remove all of the fines from the bed. If the fines remain in the bed,

potential problems can develop such as channeling, excessive pressure drop, or even cementing. The extra backwashing effort during bed placement permits fines at the bottom of the bed to work their way up and out to waste. Because the lower portions of the bed (which contain the largest particles) do not expand during backwash, fines not backwashed out of the bed at that stage may be permanently locked into the bed. The backwash water should be directed to waste.

5.3 Treatment Process with Spent Treatment Media Regeneration

Upon completion of backwashing of a virgin bed, the bed should be drained and the vessel opened. Approximately •- to ¼-inch of fine bed material should be skimmed from the top of the bed. The finest grain material tends to blind the bed, causing channeling and/or excessive pressure drop. Once that material is removed, the vessel can be closed and refilled with water.

At this point the plant should be cleaned up. Airborne fines that form a dust-like coating on piping and equipment should be removed. Good housekeeping should begin immediately and be continued on a permanent basis.

The pressure loss checkout mentioned in Section 3.4, Final Design, should be accomplished at this point, just prior to startup. See Table 5-2 for calculated pressure drop through activated alumina treatment media. If there is a pressure loss problem, it should be corrected prior to treatment startup. For other adsorptive media, consult the manufacturer for information on pressure drop.

Table 5-2. Calculated Activated Alumina (–28, +48 Mesh) Downflow Pressure Drop Data

Water Flowrate (gpm/ft^2)	Pressure Drop in psi per Foot of Bed Depth	Modified Reynolds Number
2.0	0.009	2375
3.0	0.018	3555
4.0	0.028	4735
5.0	0.040	5900
6.0	0.053	7111
7.0	0.068	8291

5.3.1 Treatment Mode

Prior to start of operation, the pH instrumentation should be calibrated. The most critical requirement for efficient low-cost operation is the control of the raw water adjusted pH. For activated alumina, the optimum condition for maximum arsenic removal exists when the treatment pH is in the range of 5.0-6.0. The best results have occurred when the pH is held rigidly at 5.5 (Rubel, 1984, 1981). Because acid feedrates are a function of raw water alkalinity, they vary from one water to another. As raw water pH moves above 6.0 or below 5.0, arsenic removal capacity deteriorates at an increasing rate. However, when the alkalinity of the raw water is extremely high and/or the cost of acid is very high, it can be more cost-effective to operate in a pH range of 6.0-6.5 in order to reduce the acid consumption (even though arsenic removal efficiency is also reduced). For other adsorptive media, consult the manufacturer for information regarding treatment process pH adjustment requirements.

The downflow treatment for the first (virgin) run can now begin. See the valve operation chart (Table 5-1) for valve positions for this function. It is recommended that one vessel be placed in operation at a time. This allows the operator to concentrate on initial raw water pH adjustment on one treatment unit until it is in stable operation; the operator then can devote full concentration to the second treatment unit.

The basic flow schematic for the treatment mode is illustrated in Figure 5-2.

With activated alumina, the initial effluent pH is high with no arsenic removal (similar to the neutralization mode explained later). After a short period, both pH and arsenic in the treated water drop to anticipated levels. At that time, the treated water can be directed to storage and/or distribution. The first treatment unit will be returned to operation in the lead position after the pH of the second treatment unit has also been stabilized at pH 5.5. Depending on the requirements of the state or local regulatory agency, samples may have to be analyzed at a certified testing laboratory prior to approval of distribution of treated water.

In the series process utilizing two treatment vessels, the entire arsenic removal process takes place in a treatment band that initially is contained in the lead vessel. The arsenic ions are completely removed within the treatment band. After an extended treatment period, the adsorptive media at the top of the treatment band becomes saturated. The treatment band then begins to migrate downward slowly through the treatment bed until arsenic starts to break through. Breakthrough is defined as the first detectable amount of arsenic appearing in the effluent from the lead column. Although the detectable level will vary depending on the analytical method used to measure the arsenic, it would likely be near 3 µg/L. An example of a breakthrough curve of the lead column is shown in Figure 5-3. As breakthrough occurs, there is a long period of slowly increasing arsenic concentration the treated water. The treatment band then enters the treatment media in the lag column where treatment

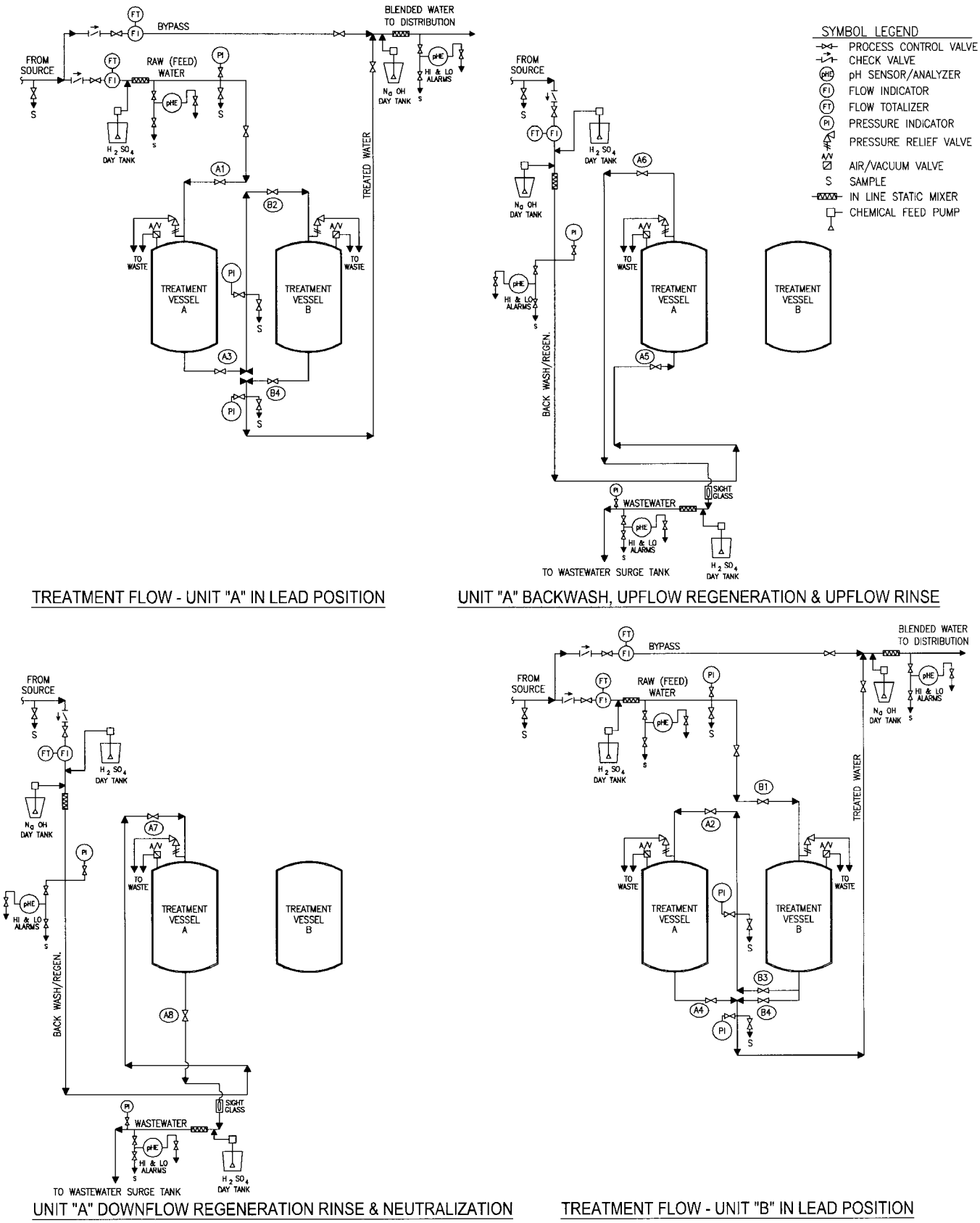

Figure 5-2. Basic Operating Mode Flow Schematics

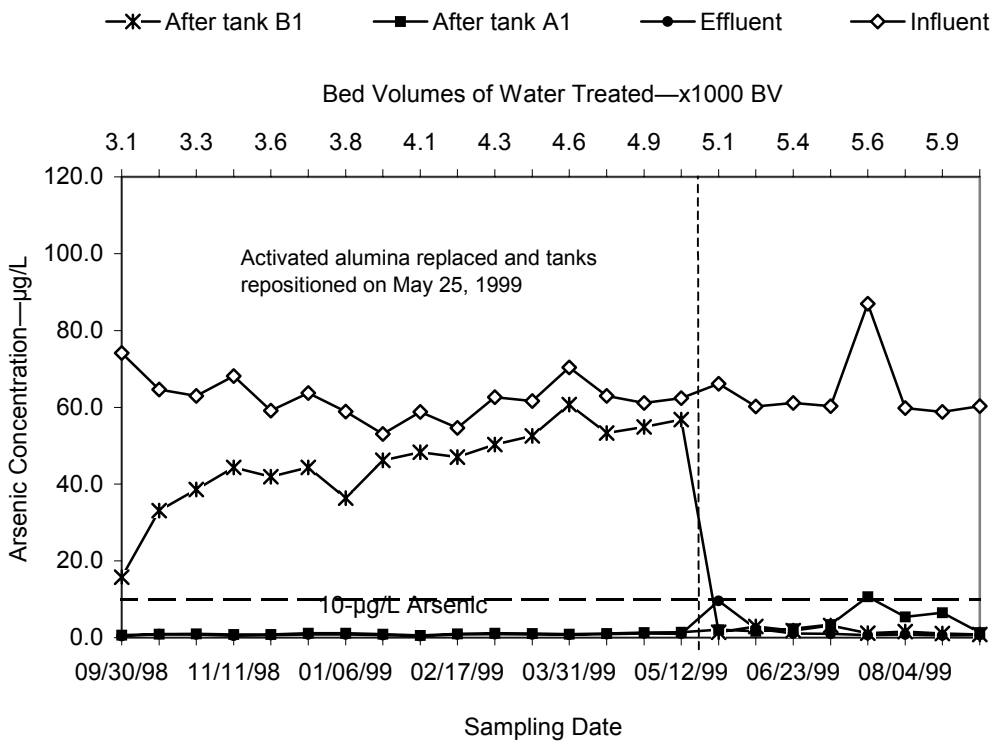

Figure 5-3. Typical Breakthrough Curve for Arsenic. The vertical dash line represents the date of the media replacement. The horizontal dash line represents 10-µg/L arsenic level. Tank B1 was used as a roughing filter and tank A1 as a polishing filter before the media replacement on May 25, 1999; after that, tank A1 was used as a roughing filter and the recharged tank B1 as a polishing filter (Source: Wang et al., 2002).

removes the remaining arsenic. As treatment progresses, the treatment band progresses downward through the lead column until the media in the column is completely saturated. At that point, the arsenic concentration in the raw water entering and the treated water leaving the lead column are the same. The treatment band is entirely contained in the lag column. The lead column then can be removed from the treatment train to provide regeneration of the treatment media. For systems that do not regenerate the treatment media, the spent treatment media in the lead column should be replaced with new (virgin) treatment media. Whether the media is regenerated or replaced, the arsenic removal treatment capacity is restored for a follow on treatment cycle in the treatment vessel. The treatment vessel with fresh adsorptive media is returned for treatment service in the lag position. The treatment vessel that was formally in the lag position is placed in the lead position.

Concurrently, in the vessel that has completed the regeneration process, the treated water pH gradually drops to the adjusted raw water pH level where it remains through the duration of the run. Because the pH of the treated water is lower than the normally accepted minimum pH of 6.5, it should be raised either by chemical addition, aeration, and/or blending with raw water. Regardless of the method of pH adjustment, it should take place and be stabilized at the desired level prior to delivering the treated water into distribution.

High pH in the treated water is also a concern. Normally the maximum allowable pH is 8.5; however, there are exceptions where pH 9.0 may be permitted. Most systems desire pH in the 7.5-8.0 range. When the treated water is approved and the pH stabilized for distribution, it flows out of the plant past a failsafe pH sensor with high and low level alarms. If there is a pH excursion exceeding the allowable limits, an interlock (incorporating the pH alarms with the well pump(s) magnetic starter) de-energizes the well pump(s). Simultaneously, the chemical pumps shut down as their controls are interlocked with the well pump(s) power circuitry. The failsafe pH override automatically prevents any treated water for which pH is out of tolerance from entering the distribution system. In the event of such an excursion, the operator manually controls the well pump(s) to divert the unacceptable water to waste, determine the cause of the deviation, and make corrections prior to placing the treatment system back on line. Probable causes for treated water pH deviations are: change in water flowrate, change in acid

flowrate, change in caustic flowrate, and change in raw water chemistry.

As breakthrough occurs in the lead column, there is a long period of slowly increasing arsenic concentration in the lead column effluent. This period increases the arsenic loading on the media of the lag column and results in lower operating costs. It should be noted that the higher the raw water arsenic level, the greater the adsorption (driving force) capacity. Because many other factors can affect this capacity, the precise amount is difficult to predict. The operator should be cognizant of the fact that the more water treated during a run, the lower the operating cost.

In raw waters where the arsenic level is very low, part of the raw water can bypass treatment and be blended back with the treated water. A skilled operator may be able to develop many techniques such as this to minimize operating costs.

High iron content in raw water can cause problems during a treatment run. The iron oxidizes, precipitates, and is filtered from solution by the adsorptive media. This results in increased pressure drop, and shortened treatment runs. Raw water iron content greater than 0.3 mg/L is cause for concern. However, if the iron concentration is above 0.3 mg/L, the secondary MCL, an iron removal process should be considered as the treatment process for arsenic removal in place of the adsorptive media process because of the capability of the process to remove arsenic.

5.3.2 Backwash Mode

It is important that the bed be backwashed with raw water after each treatment run prior to regeneration for two reasons. First, any suspended solids that have been filtered from the raw water by the treatment bed tend to blind the bed. Therefore, these particles should be removed from the bed. Second, even though filtration may have been negligible, the downward flow tends to pack the bed. An upflow backwash will expand the bed, and break up any tendency towards wall effects and channeling. A backwash rate of 7 gpm/ft^2 will expand the −28, +48 mesh activated alumina bed approximately 50%, which is recommended. For other adsorptive media, backwash flowrate requirements should be provided by the manufacturer. As mentioned in prior chapters of this manual, the backwash rate may vary with grain size, material density, and water temperature. Care must be taken to avoid backwashing granular bed material out of the treatment unit. Normally backwashing lasts 10 min or until all suspended solids are removed from the treatment media.

Refer to Table 5-1 for valve positions for the backwash mode. The basic flow schematic for the backwash mode is illustrated in Figure 5-2. For most effective backwash, it is recommended that the vessel be drained prior to backwash. As backwash water flows into a drained bed, it lifts the entire bed approximately 1 ft prior to the bed fluidizing. This action provides an efficient scouring action without excessive abrasion to the adsorptive media grains. Backwash water samples should be inspected frequently to determine that filtered material is still being removed and treatment media is not being washed out of the bed. Excessive backwash causes abrasion that wears down the adsorptive media grains, and also wastes raw water and increases the wastewater disposal volume. Therefore, backwash volume should be minimized. It is prudent to periodically inspect the media level of each treatment bed to determine whether bed volume has changed.

5.3.3 Regeneration Mode

The most efficient, cost-effective method of regenerating an activated alumina treatment bed upon completion of a treatment run includes two discrete regeneration steps. The first step is upflow following draining of the bed after the backwash mode. The upflow regeneration is followed by an upflow rinse. The unit is then drained to the top of the treatment bed prior to the second regeneration step (which is downflow). Both steps use a 5% (by weight) NaOH solution. For regeneration procedures for other adsorptive media, consult the manufacturer.

The object of regeneration is to remove all arsenic ions from the media before any part of the media is returned to the treatment mode. Arsenic ions lose their attraction (adsorptive force) and become repelled by the alumina when the pH rises above 10.5. The higher the pH, the faster and more efficient the regeneration. However, too high a pH not only costs more (because of higher caustic for regeneration and acid for neutralization consumption), but is also increasingly aggressive to the alumina. The 5% NaOH solution is the maximum concentration required for high efficiency regeneration (recovery of total arsenic capacity). A skilled operator might be able to reduce the concentration of the NaOH to 4% with the same high efficiency performance. However, below 4%, efficiency deteriorates rapidly. This lower caustic concentration can reduce caustic consumption for regeneration up to 20%. As described in Chapter 3.0, the dilution of the caustic takes place at an injector in the regeneration water piping. Both the raw water and the 50% NaOH are metered prior to injection into the regeneration main. The accuracy of the metering ranges from ±2% to ±5% depending on the type of flow instrumentation.

The rule of thumb for the volume of 5% caustic solution required per activated alumina regeneration step is 15 gal/ft^3 of treatment media. Because there are two regeneration steps (upflow and downflow), the actual regeneration time exclusive of draining, flushing and neutralization is 2 hr. The minimum time recommended per step for the solution to flow through the bed is 60 min. The maximum time of 90 min for each step is recommended. For a 5-ft-deep treatment bed, a flow of 1.25 gpm/ft^2 for a period of 60 min for each regeneration step is sufficient. This equates to 1 gal 50% NaOH per cubic foot of treatment media for each regeneration step (upflow and downflow).

For the valve position during each step of the regeneration mode, refer to Table 5-1. The basic flow schematics for the regeneration modes are illustrated in Figure 5-2. After backwash, prior to the upflow regeneration step, the bed will be drained to remove water, which dilutes the caustic concentration. Upon completion of the upflow regeneration, the caustic feed pump is turned off and the caustic soda day tank refilled. The raw water continues to flow for 60 min at 2.5 gpm/ft^2 flowrate upward through the bed, flushing out the arsenic. After this rinse step is completed, the vessel is drained to the top of the treatment bed, again to remove dilution water. The downflow regeneration then takes place for 60 min. The downflow regeneration is followed by draining fluid down to the top of the bed prior to the start of the neutralization mode.

5.3.4 Neutralization Mode

The neutralization mode is critical to the success of the following treatment run. The object of this mode is to return the bed to the treatment mode as rapidly as possible without dissolving the activated alumina. The pH of the treatment media after completion of the regeneration is 13+. It should be adjusted down to pH 5.5, and therefore will pass through pH ranges where ions that compete for absorption sites on the alumina will be adsorbed onto the bed. The minimum pH that can be safely exposed to the granular activated alumina is 2.5. A pH lower than that is too aggressive and is not recommended. For neutralization procedures for other adsorptive media, consult the media manufacturer.

At the start of the downflow neutralization mode, the valves are positioned according to Table 5-1, and the flow is adjusted to the normal treatment mode rate. The basic flow schematic for the neutralization mode is illustrated in Figure 5-2. After 15 min the acid pump is started, and the pH of the raw water is adjusted to 2.5. Acid feedrate again varies with the alkalinity of the raw water. The raw water flowrate may have to be reduced to achieve pH 2.5 at the maximum acid pump feedrate.

As the neutralization mode proceeds, the pH of the treated water gradually drops below 13. The rate of pH reduction increases at an increasing rate. As the treated water pH drops below 10, the treated water arsenic level begins to drop below that of the raw water. At the point where the arsenic level drops below the MCL, the water becomes usable and can be directed to storage. When the treated water pH drops to 8.0, the raw water pH is adjusted up to 4.0 as the bed rapidly neutralizes. When the treated water pH drops to 6.5, the raw water pH is adjusted up to 5.5 where it remains through the duration of the treatment cycle. The regenerated treatment unit now starts the next cycle in the treatment mode. Prior to placement of the regenerated treatment unit into service in the lag position, the operator should open the manway in the top head of the vessel to check the level of the treatment media. Approximately 5% of the activated alumina will be dissolved during regeneration. The operator should replace the lost activated alumina by adding an equal amount to bring the bed back to the original level. The operator should backwash the bed with water adjusted to pH 5.5 for 30 min. The regenerated treatment unit will then be placed into service in the lag position. It remains there until the treatment vessel in the lead position is removed for regeneration.

A summary of the regeneration process for the activated alumina process is shown in Table 5-3. For similar infor-

Table 5-3. Typical Process Conditions for Regeneration of an Activated Alumina Treatment System[(a)]

Step No.	Step	Liquid	Flow Direction	Rate (gpm/ft^2)	Time (minutes)	Wastewater (gal)
1	Backwash	Raw water	Upflow	7	10	30
2	Regeneration	5% NaOH	Upflow	1.2	60-90	15
3	Rinse	Raw water	Upflow	2.5	60	30
4	Regeneration	5% NaOH	Downflow	1.2	60-90	15
5	Neutralization	Raw Water adjusted to pH 2.5	Downflow	Varies	Time to achieve pH of 8.0	240
6	Neutralization	Raw water adjusted to 4.0	Downflow	Varies	Time to achieve pH of 6.5	
7	Neutralization	Raw water adjusted to 5.5	Downflow	Varies	Time to achieve pH of 5.5	
					Total	330

(a) Consult manufacturer for similar information on other adsorption media.

mation on other adsorptive media with regeneration capability, the manufacturer should be contacted.

The volume of wastewater produced during the regeneration of a treatment bed will vary with the physical/chemical characteristics of the raw water. A rule of thumb that can assist the operator in his logistical handling is that 300-400 gal of wastewater is produced per cubic foot of activated alumina during each regeneration. Typical volumes of wastewater generated per cubic foot of activated alumina during each regeneration step for a hypothetical treatment bed are shown in Table 5-3.

Operational experience at a specific treatment plant will present deviations from these quantities.

5.4 Treatment Process with Spent Treatment Media Replacement

Treatment systems that are designed to replace spent adsorptive media undergo the same initial startup procedure as those that are designed for regeneration of spent media. For those procedures, see Section 5.2.

5.4.1 Treatment Mode

The treatment mode for systems that replace spent adsorptive media is identical to that described in Section 5.3.1 for systems that employ treatment process pH adjustment with the exception that it is also applicable to systems that do not employ treatment process pH adjustment. For those systems that do not employ pH adjustment, the treatment mode merely deletes all reference to pH adjustment from the treatment process. The duration of treatment cycles for the systems without treatment process pH adjustment is greatly reduced (Rubel, 1984) depending upon the adsorptive media. The relative performance is a function of the adsorptive media, and the raw water chemistry for each individual water treatment system. High concentrations of ions including but not limited to silica, alkalinity, hardness, fluoride, and sulfate as well as high pH may adversely affect the adsorptive media arsenic capacity as well as the percent removal of arsenic.

5.4.2 Media Replacement Mode

The media replacement mode includes removal of spent media for disposal and replacement with fresh (virgin) adsorptive media for the next treatment cycle. Several methods are available for spent media from treatment vessels. The method used will vary with the size of the treatment vessel. Typical removal methods are discussed in Section 5.1 and Appendix E. Installation of replacement adsorptive media should repeat the procedures described in Section 5.2.

5.5 Operator Requirements

A qualified operator for an arsenic removal water treatment plant should have thorough arsenic removal process training, preferably at an existing treatment plant. The operator should be able to service pumps, piping systems, instrumentation, and electrical accessories. The operator should be fully informed about the safety requirements and physical/chemical characteristics of both acid and caustic in all concentrations. Corrosive chemical safety requirements as to clothing, equipment, antidotes, and procedures must be thoroughly understood. The operator should be thoroughly trained to run routine water analyses including the method for determining arsenic levels. The operator should be well grounded in mathematics for operation cost accounting and treatment run recordkeeping. The operator, above all, should be dependable and conscientious.

5.6 Laboratory Requirements

In addition to the O&M Manual, the treatment plant should have the latest edition of *Standard Methods for the Examination of Water and Wastewater* prepared jointly by the American Public Health Association–American Water Works Association–Water Environment Federation (APHA-AWWA-WEF, 1995). This manual supplies the plant operator with necessary information for acceptable methods for analyzing water. A recommended list of items for analysis is illustrated in Figure 3-1. The primary requirement is accurate analysis for arsenic and determination of pH. As long as pH meters are calibrated and cleaned regularly, high precision measurements are easily obtained. Care should be exercised to prevent contamination of pH buffers.

Total arsenic can be effectively preserved in field samples and analyzed by several analytical methods down to the MCL of 10 µg/L or less. Preservation of total arsenic is accomplished by acidifying the sample to pH <2. The Arsenic Rule lists four U.S. EPA approved analytical methods: inductively coupled plasma–mass spectroscopy (ICP-MS), graphite furnace atomic absorption (GFAA), stabilized temperature platform (STP) GFAA, and gaseous hydride atomic absorption (GHAA). These methods are U.S. EPA-approved for compliance requirements and require expensive analytical equipment that is found only at extremely large water treatment plants. During the past several years, several companies have developed portable test kits for field analysis of arsenic.

Several arsenic tests kits have been evaluated under the U.S. EPA Environmental Technology Verification (ETV) program by the Advanced Monitoring Systems Center managed by Battelle in partnership with U.S. EPA. These kits were tested for monitoring arsenic in the 1 to 100 µg/L range. Information on the test kits can be found

on the Internet (http://epa.gov/etv/verifications/vcenter1-21.html). Although these test kits may be adequate for monitoring process performance, they are not U.S. EPA-approved methods for use in reporting MCL compliance data. For regulatory data, water samples must be analyzed by U.S. EPA/state-certified testing laboratories employing U.S. EPA-approved methods.

5.7 Operating Records

A system of records should be maintained on file at the treatment plant covering plant activity, plant procedures, raw water chemical analyses, plant expenditures, and inventory of materials (spare parts, tools, etc.). The plant operator should have the responsibility of managing all aspects of the treatment plant operation. The operator is accountable to the water system management. The recommended record system should include, but not be limited to, the items described in the following subsections.

5.7.1 Plant Log

A daily log should be maintained in which the plant operator records daily activities at the plant. This record should include a listing of scheduled maintenance, unscheduled maintenance, plant visitors, purchases, abnormal weather conditions, injuries, sampling for state and other regulatory agencies, etc. This record should also be used as a tool for planning future routine and special activities.

5.7.2 Operation Log

The operator should maintain a log sheet for each treatment run for each treatment unit. Thereby, a permanent plant performance record will be on file. Figure 5-4 illustrates a copy of a suggested condensed form.

5.7.3 Water Analysis Reports

It is recommended that the plant operator run an analysis of raw and treated arsenic levels once each week for each unit, and should run a total raw water analysis once per month. Changes in raw water may necessitate changes in the treatment process. Raw water changes that can impact the treatment process include, but are not limited to, pH, alkalinity, iron, manganese, hardness, phosphate, silica, sulfate, sodium, TDS, and turbidity. Figure 3-1 illustrates a copy of a suggested form. A permanent file of these reports can be a valuable tool.

5.7.4 Plant Operating Cost Records

Using accounting forms supplied by the water system's accountants, the plant operator should keep a complete record of purchases of all spare parts, chemicals, laboratory equipment and reagents, tools, services, and other sundry items. This should be supplemented by a file of up-to-date competitive prices for items that have been previously purchased.

5.7.5 Correspondence Files

The plant operator should retain copies of all correspondence pertaining to the treatment plant in chronological order. Included would be intradepartmental notes and memos, in addition to correspondence with other individuals and/or organizations.

5.7.6 Regulatory Agency Reports

The plant operator should maintain a complete file of copies of all reports received from state, county, or other regulatory agencies pertaining to the treatment plant.

5.7.7 Miscellaneous Forms

The operator should have an adequate supply of accident and insurance forms.

5.8 Treatment Plant Maintenance

The maintenance concept for the arsenic removal water treatment plant is to isolate the equipment to be serviced by means of shutoff valves, vent and drain lines (as required), repair or replace equipment, fill lines, open valves, and start service. To accomplish this, all equipment items are equipped with isolating valves, and all piping systems have vents at high points and drains at low points.

Equipment manufacturers' recommended spare parts should be stocked at the treatment plant to avoid lengthy maintenance shutdowns.

If the entire treatment plant needs to be shut down and the plant has bypass, the plant itself can be bypassed. This can be done by closing the butterfly valves in the raw water and treated water line and then opening the butterfly valve in the bypass line. This would result in untreated water with excessively high arsenic being pumped to distribution, an event that should not occur without the approval of the water system manager and the regulatory agency.

5.9 Equipment Maintenance

Equipment manufacturer's maintenance instructions should be included in the Suppliers Equipment Instructions section of the O&M Manual.

ARSENIC REMOVAL WATER TREATMENT PLANT
OPERATION LOG

Unit # _____ Run # _____ Date Start _____ Date End

TREATMENT TO RESERVOIR
Meter End _____ Meter Start _____ Total Treated _____ k-gal.

BYPASS TO RESERVOIR
Meter End _____ Meter Start _____ Total Treated _____ k-gal.

BACKWASH TO WASTE
Meter End _____ Meter Start _____ Total _____ k-gal.

REGENERATION TO WASTE
Upflow:
Meter End _____ Meter Start _____ Total _____ k-gal.
Downflow:
Meter End _____ Meter Start _____ Total _____ k-gal.

RINSE TO WASTE
Meter End _____ Meter Start _____ Total _____ k-gal.

NEUTRALIZATION RINSE TO WASTE
Meter End _____ Meter Start _____ Total _____ k-gal.

TOTAL WASTEWATER SUMMARY
Total to Tank _____ k-gal. PERCENT WASTE _____%

TREATED WATER LOG

Date	Treatment Meter (k-gal)	Δ Meter (k-gal)	∑ Δ Meter (k-gal)	Raw As (mg/L)	Treated As* (mg/L)	Δ As (mg/L)	As Removed (mg)	∑ As Removed (mg)

* Average treated water arsenic.

Figure 5-4. Arsenic Removal Water Treatment Plant Operation Log

5.10 Treatment Media Maintenance

The plant operator should inspect the surface of each treatment bed at least once a month. If the level of a bed lowers more than 8 inches, makeup adsorptive media should be added. Makeup adsorptive media should be evenly distributed. There should be a minimum depth of 2.0 ft of water above the surface of the existing bed through which the makeup adsorptive media will be added. The vessel should be closed immediately and backwashed at 7 gpm/ft^2 (or at rate recommended by the manufacturer) for at least 30 min. It is very important to flush the fines out of the virgin activated alumina as soon as it is wetted.

It is important that the treatment beds should not remain in the drained condition for more than an hour. Treatment units not in use should remain flooded.

5.11 Treatment Chemicals Supply

The operator should carefully monitor the consumption of liquid chemicals and reorder when necessary. The operator should have a method of determining the depth of liquid in the storage tank (e.g., dipstick) and equating that to the volume of liquid in the tank. Figure 5-5 illustrates a liquid depth versus volume curve for a 5,000-gal horizontal cylindrical tank with dished head.

5.12 Housekeeping

The plant operator should wash down all equipment at least once per month. Floors should be swept. Bathroom and laboratory fixtures should be cleaned once per week. All light bulbs should be replaced immediately upon failure. Emergency shower and eyewash should be tested once per week. Any chemical spill should be neutralized and cleaned up immediately. Equipment should be repainted at least once every five years.

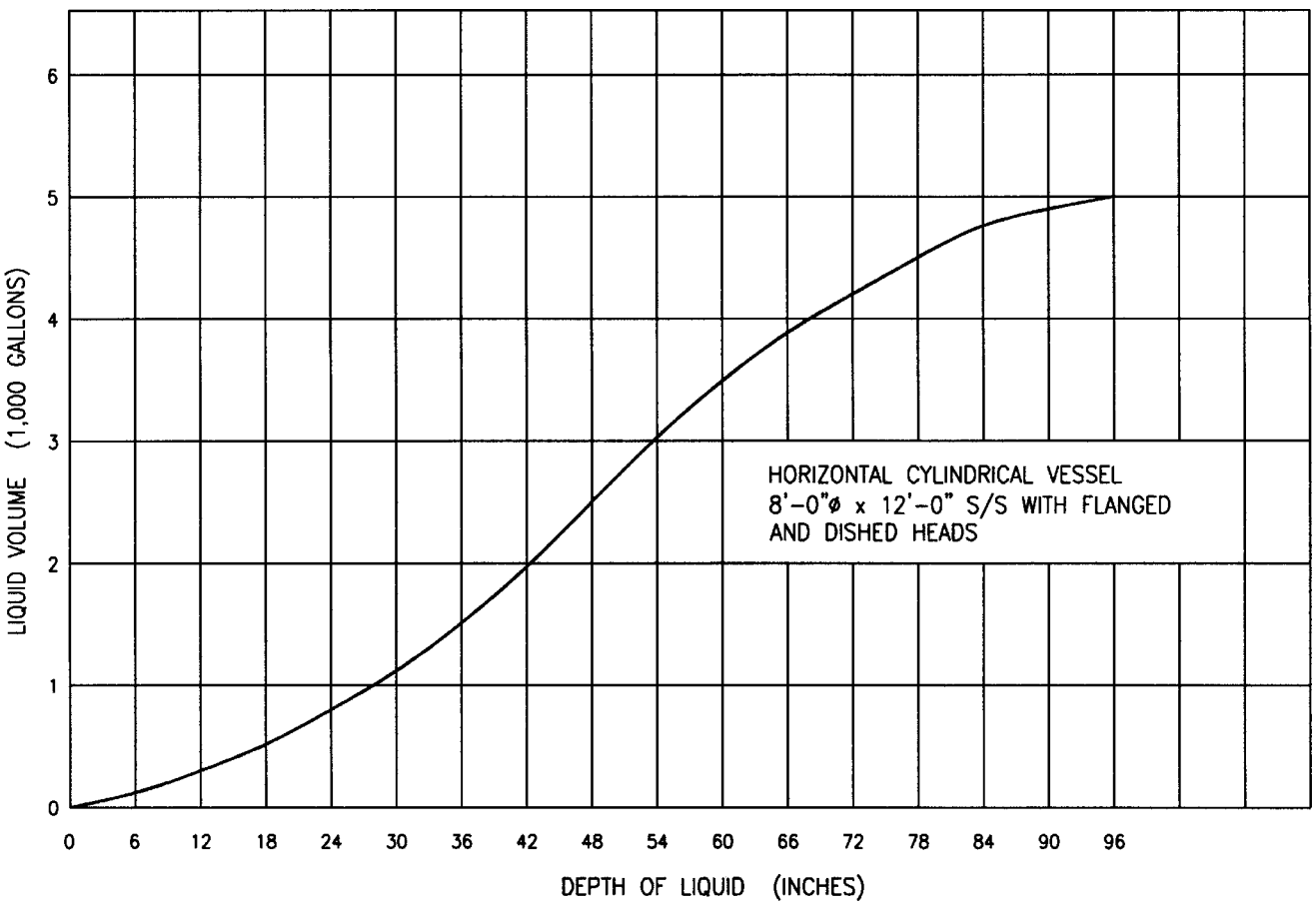

Figure 5-5. 5,000-gal Chemical Storage Tank – Liquid Volume

6.0 Central Treatment Plant Operating Cost

6.1 Introduction

The prime objectives in central treatment plant design are to provide the client with a low-capital cost installation that works efficiently and reliably; is simple to operate; and is inexpensive to operate. Operating costs normally are passed directly on to the water user in the monthly water bill. These costs include the following:

1. Treatment chemical costs
2. Operating labor costs
3. Utility costs
4. Replacement treatment media costs
5. Replacement parts and miscellaneous materials costs
6. Waste disposal cost (not included in this manual).

As the consumer's water bill normally is based on metered water consumption, the costs for treatment are prorated on the unit of volume measurement. The units of volume are usually 1,000 gal, or 100 ft^3 (750 gal). The rate units employed in this design manual are ¢/1,000 gal. Some systems do not meter consumption; instead, they charge a flat monthly rate based upon the size of the branch connection to the water main. Although this latter mode of distribution saves the cost of meters as well as the reading of meters, it does not promote water conservation. Therefore, far more water is pumped, treated, and distributed, resulting in a net increase in operating cost.

The common denominator that applies to both the operating cost and the bill for water consumption is the unit of volume, 1,000 gal. Each operating cost factor can be reduced to cost/1,000 gal. The sum total of the annual operating costs based on total water production yields the cost per 1,000 gal.

6.2 Discussion of Operating Costs

Similar to capital cost, many variables affect operating cost. This manual indicates the types of operating cost variables that are evaluated during each stage of the design phase of the project and during the operation of the treatment plant. The example method employed in this manual provides the user with the ability to design the treatment system with maximum capability and flexibility. The system includes adsorptive treatment media with spent media regeneration and pH adjustment capabilities (with manual or automatic operation) that is applicable primarily to activated alumina.

Manufacturers of other adsorptive media indicate that their products are not as pH-sensitive as activated alumina, and therefore do not require pH adjustment. However, some of these materials are vulnerable to a loss of arsenic removal capacity when the treatment process pH adjustment is not provided, due to competition from competing ions such as silica, phosphate, and sulfate. Manufacturers also indicate that As(III) requires oxidation to As(V) to accomplish total arsenic removal by their products, and that those products have such a large arsenic removal capacity that spent media regeneration is not considered necessary. Some of these products are not capable of regeneration, and, therefore, must be replaced upon exhaustion of capacity. Under these parameters, those products do not require operating cost for pH adjustment chemicals.

This manual discusses systems that are capable of providing spent media regeneration and treatment process pH adjustment. By including these capabilities in the system design, the operation of the treatment plant has the flexibility to include or exclude those functions. If the system includes these capabilities, the operator may still elect to replace the spent adsorptive media with virgin activated alumina (or a different adsorptive media) instead of regenerating the spent media. If a different adsorptive media replaces the original adsorptive media, the pH adjustment can also be added to or eliminated from the operation. Therefore, the operator has the option of replacing the spent adsorptive media or regenerating it.

Size of system is another variable that impacts the mode of operation. Except for replacement of spent media, operating labor requirements do not vary with the size of the system, but do vary with the type of operation; the smaller system will tend to employ the simplest operation. Replacement of spent treatment media in place of regeneration is the main factor to consider. Spent media replacement requires removal and disposal of spent media, placement and conditioning of virgin media in place of the regeneration process, and processing and disposal of regeneration wastewater and waste solids.

Besides treatment system size, other items that influence the mode of operation are the feedwater arsenic

concentration and the arsenic removal capacity of the adsorptive media. The arsenic removal capacity of an adsorptive medium increases as the arsenic concentration increases. The arsenic adsorptive capacity vs. arsenic concentration also may vary between media. The costs of the adsorptive media vary. These factors are evaluated in selection of the treatment concept and the adsorptive media. The frequency of spent media replacement/regeneration, cost of treatment chemicals, cost of adsorptive media, waste disposal costs, and cost/availability of operating personnel not only vary with geographic locations but also are sensitive to price volatility. Therefore, the operational flexibility provided in Chapter 3.0 of this manual allows the system to adapt to the optimum adsorptive media and operating method at any time.

The manual method is satisfactory for each operation mode of the adsorptive media arsenic removal process. If spent adsorptive media regeneration is included in the operation, automatic operation also should be evaluated. If the spent adsorptive media is replaced in place of regeneration, automatic operation is not a practical option. Media replacement is a manual function. As the feedwater arsenic concentration increases, the frequency of spent adsorptive media regeneration increases. As the size of the system increases, automatic operation becomes more attractive. Therefore, automatic operation will be beneficial for larger systems with high feedwater arsenic concentration requiring more frequent regeneration and stringent limits on operator time.

The following subsections discuss each of the operating costs previously listed.

6.2.1 Treatment Chemical Costs

The treatment chemicals discussed are limited to sulfuric acid (H_2SO_4) and caustic (NaOH). Both are highly corrosive, hazardous liquid chemicals that require compatible materials of construction, containment provisions, safety provisions, weather protection, and operator training. Although special precautions and training are required, they are routinely accomplished. Other acids and bases can be substituted for those chemicals, but they are usually more costly and therefore rarely considered. Other chemicals also are used for other requirements such as corrosion inhibition, precipitation of regeneration wastewater solids, dewatering of precipitated solids in wastewater, and disinfection; however, these are site-specific requirements that are not covered in this manual.

The chemicals used for treatment of water for public consumption require NSF/ANSI STD 60 certification by most state regulatory agencies. It also is recommended that the chemical supplier be required to certify that the containers used to store and deliver the chemicals have not been used for any other chemical; or if they have, that they have been decontaminated according to procedures required by the governing regulatory agency.

Chemical costs are variable; recently these costs have been volatile. Like all commodities, there is sensitivity to the supply and demand fluctuation of the marketplace. The geographic location of the treatment plant site in relation to that of the supplier has an impact on the delivered cost. In some cases, the delivery costs are greater than the cost of the chemical. The conceptual design evaluates the chemical logistics and determines the most cost-effective mode of procurement as well as whether chemicals for pH adjustment are economically feasible.

Chemical costs are sensitive to the volume and containment mode of the commodity purchased. Because commodity handling is minimized, bulk tank truck quantities entail the least cost. Tank truck quantities are normally 48,000 lb. Bulk deliveries require chemical storage tanks within containment basins located at the treatment plant site with necessary safety provisions and weather protection. The same commodities can be routinely purchased in drums (55-gal or 30-gal), totes, carboys, gallon jugs, etc. These packaged quantities result in much higher unit prices than bulk quantity. The drum and other small container prices also depend on the quantity procured at one time. Small containers also introduce additional handling requirements for the treatment plant operator. For very small treatment systems, bulk procurement and storage is not justified unless the feedwater arsenic and alkalinity concentrations are extremely high. In special low flowrate systems where high arsenic and high alkalinity are present in the feedwater and drum quantity costs are significantly higher than bulk quantity costs, the increased chemical consumption could justify bulk purchase.

The chemistry of the raw water to be treated is the most significant factor affecting treatment chemical consumption and cost. Arsenic and alkalinity are the key ions in the raw water; the higher the concentration of either ion, the higher the chemical consumption and cost per 1,000 gal of treated water.

6.2.1.1 Acid Cost

The most cost-effective, commercially available chemical for lowering pH is concentrated sulfuric acid. Hydrochloric acid also is applicable, but it is more difficult to handle, increases chlorides (i.e., is corrosive), and usually is more costly. The chemical designation of commercially available sulfuric acid is 66°B′ H_2SO_4. Its concentration is 93.14%. The remaining 6.86% is water (plus other ions). The other ions that could be present should be evaluated and could result in a slight increase in their

concentration in the treated water. Frequently, small quantities of iron and trace amounts of heavy metals are present. For water treatment service, there are stringent limits on the levels of contaminants in the acid which will be rigidly enforced. NSF certification of the acid for use as an additive in drinking water is required.

The most economical method of procuring acid is in bulk tank truck quantities (48,000 lb) which are 3,100 gal each. The tank trucks are loaded at each acid manufacturer's site or at a distribution storage site and delivered directly to the treatment plant where the acid is transferred to the acid bulk storage tank. Transfer is accomplished by means of compressed air, which is provided by an air compressor on the truck (unless the treatment plant can provide the compressed air). In addition to the lower commodity price resulting from minimum handling and storage of the chemical, there is minimum chance of contamination. At large treatment plants where there is potential for high acid consumption, rail tank car quantity (200,000 lb) delivery, which is cheaper, may be justified. Capital expenditures for a 16,000-gal (minimum) storage tank and a rail spur with unloading equipment then are required.

The delivered cost of bulk tank truck quantities of sulfuric acid normally ranges from 4.5 to 6¢/lb depending on the geographic location of the treatment plant. Drum quantity costs are normally 10 to 12¢/lb higher.

The acid is consumed in three possible locations in the treatment process at arsenic removal treatment plants utilizing adsorptive media with pH adjustment of process water and regeneration of spent media. First, it is used to adjust the raw water pH to the treatment requirement; second, it is used to neutralize the treatment bed immediately after regeneration; finally, it may be used for pH adjustment of the regeneration wastewater. In plants that replace the spent adsorptive media rather than regenerate it, only the first acid feed location is required. The raw water alkalinity dictates the amount of acid required for the pH adjustment step. For treatment plants that do not adjust treatment process pH, acid storage and feed equipment is not required unless it is determined that provisions for future pH adjustment capability is desirable.

The acid consumption for pH adjustment can be accurately projected by running a titration on a raw water sample. The cost of acid required for pH adjustment is then determined by extending the acid addition in mg/L to the weight (lb) required per 1,000 gal and multiplying by the commercial cost for the acid.

For the design example presented in Appendix B, a hypothetical feedwater analysis includes the following:

Total alkalinity (M)	= 220 mg/L (as $CaCO_3$)
Arsenic (As)	= 0.100 mg/L
pH	= 8.0.

Based upon determination by titration, the quantity of 66°B• H_2SO_4 required to adjust the pH to 5.5 is 205 mg/L. The amount of acid required per 1,000 gal treated water is as follows:

$$\frac{205\text{ mg}}{\text{L}} \times \frac{10^{-6}\text{ kg}}{\text{mg}} \times \frac{\text{lb}}{0.4545\text{ kg}} \times 1000\text{ gal} \times \frac{3.785\text{ L}}{\text{gal}} =$$

$$1.71\text{ lb/1,000 gal}$$

Therefore, for an acid bulk quantity price of 5¢/lb, the acid cost per 1,000 gal treated water is 8.5¢. If the acid had been procured in drum quantities at 16¢/lb, the resulting cost would be 27¢/1,000 gal. Conversely, if the feedwater total alkalinity had been 100 mg/L as $CaCO_3$ and the pH 7.5, then the resulting acid required to adjust pH to 5.5 would be 92.4 mg/L. That equates to 0.77 lb/1,000 gal, or 3.9¢/1,000 gal (for acid bulk quantity price of 5¢/lb). The acid requirement used in the estimated operating cost estimate example is 8.5¢/1,000 gal.

The acid consumption for neutralization of regeneration wastewater is a function of the caustic concentration employed during regeneration and the raw water alkalinity. This quantity varies from site to site. The consumption also is a function of the raw water arsenic level, which dictates the frequency of regeneration, and the volume of water over which this cost is distributed. The higher the arsenic level, the fewer gallons treated per treatment cycle. The weight of acid required for neutralization after regeneration is normally in the range of 10 lb/ft^3 of treatment media.

For the design example presented in Appendix B using activated alumina, the arsenic removal capacity is 38,940 mg/ft^3 (600 grains/ft^3) and the feedwater arsenic concentration is 0.100 mg/L.

Then, the number of gallons of water from which total arsenic is removed is

$$\frac{38{,}940\text{ mg/ft}^3}{0.1/\text{mg/L}} = \frac{389{,}400\text{ L}}{\text{ft}^3} = 102{,}600\text{ gal/ft}^3$$

Then, using 10 lb 66°B• H_2SO_4 per neutralization per cubic foot regenerated adsorptive media, the cost of the acid is

$$\frac{10\text{ lb acid/ft}^3 \times 5¢/\text{lb}}{103\ (1{,}000\text{ gal})/\text{ft}^3} = 0.5¢/1{,}000\text{ gal}$$

Therefore, for the example provided in Appendix B, acid cost is as follows:

1. Activated alumina with spent media replacement and without pH adjustment = 0¢/1,000 gal

2. Activated alumina with spent media replacement with pH adjustment = 8.5¢/1,000 gal

3. Activated alumina with spent media regeneration and pH adjustment = 9¢/1,000 gal.

6.2.1.2 Caustic Cost

Caustic (NaOH) can be procured in either solid (100% NaOH) or liquid (50% NaOH or lower). The 50% NaOH is the standard concentration that is handled and applied to water treatment applications. That concentration is a byproduct of the chlorine manufacturing process. Therefore, it requires minimum handling to place it into a 48,000-lb bulk tank truck (3,850 gal). The problem with 50% NaOH concentration is that it freezes at 55°F; it is also very viscous and difficult to transfer at temperatures below 70°F. Therefore, it normally requires heating. Also, because it is 50% water by weight, the freight is a cost factor. Solid caustic in bead or flake form is also readily available in drums or bulk. Its freight cost is roughly half that of the liquid, but getting it into solution is difficult and dangerous. Regardless of the economics, solid caustic is not recommended for this application. Commercially available caustic in the 25% NaOH concentration has a freezing point of 0°F; however, freight costs for shipping this material are high (75% water). Capital cost for larger storage and pumping requirements also are increased. Even though heating and temperature protection are required, the 50% NaOH is recommended. Transferring caustic from tank trucks to storage tanks is accomplished with compressed air similar to the method for acid.

The delivered cost of bulk tank truck quantities of 50% NaOH presently ranges from 10 to 15¢/lb depending on the geographic location of the treatment plant. Drum quantity cost are normally 10 to 12¢/lb higher.

For the activated alumina adsorptive media with treatment process pH adjustment and spent media regeneration, the caustic is consumed at two locations in the treatment process. First, it is used to raise the pH of the treated water to the level desired for distribution; second; it is used to raise the pH of the raw water to the level required for treatment media regeneration. The first requirement may be reduced or replaced by aeration of the treated water to strip free CO_2 from the treated water.

The volume of 50% NaOH required for a 5% NaOH concentration regeneration (includes upflow and downflow requirements) is 2 gal/ft^3 per regeneration. As with the acid required for neutralization, the caustic consumption is a function of the raw water arsenic level which dictates the frequency of regeneration and the volume of water over which this cost is distributed. This varies from treatment system to treatment system.

The caustic consumption for treated water pH adjustment is also a function of raw water alkalinity and the desired treated water pH. The concentration of free CO_2 in the water after the initial pH adjustment with sulfuric acid will determine the caustic requirement. The consumption requirement is again accurately determined by continuing the original titration required for acid to lower the pH to the treatment level of 5.5; then adding the 50% NaOH required to raise the pH to the desired level (e.g., 7.5). The cost of caustic required then is determined by extending the caustic addition in mg/L to the weight required per 1,000 gal and multiplying by the commercial price for the delivered caustic.

For the design example presented in Appendix B for which the feedwater pH had been adjusted to 5.5 for treatment, the treated water pH is readjusted back to a desired level (for example, pH 7.7). For the Appendix B example, the 50% NaOH requirement determined by titration is 210 mg/L. The required quantity of 50% NaOH per 1,000 gal treated water is as follows:

$$210 \times 10^{-6} \text{ ppm} \times 1{,}000 \text{ gal } (8.34 \text{ lb/gal}) = 1.75 \text{ lb/1,000 gal}$$

Therefore, at a caustic bulk quantity price of 12.5¢/lb, the caustic cost per 1,000 gal is 21.9¢/1,000 gal. If the caustic had been procured in drum quantities at 23¢/lb, the cost would be 40¢/1,000 gal. The caustic used in the estimated operating cost example is 21.9¢/1,000 gal.

Using the same activated alumina arsenic capacity (38,940 mg/ft^3 [600 grains/ft^3]) and volume of water treated per treatment cycle (102,600 gal) discussed in Section 6.2.1.1, the cost of caustic soda is as follows:

$$\frac{2 \text{ gal} \times 12.7 \text{ lb/gal (50\% NaOH)} \times 12.5¢/\text{lb}}{103 \ (\times 1{,}000 \text{ gal treated water})} =$$

$$3.1¢/1{,}000 \text{ gal treated water}$$

Therefore, for the example provided in Appendix B, caustic soda cost is as follows:

1. Activated alumina with spent media replacement without pH adjustment = 0¢/1,000 gal

2. Activated alumina with spent media replacement with pH adjustment = 21.9¢/1,000 gal

3. Activated alumina with spent media regeneration with pH adjustment = 25¢/1,000 gal.

6.2.2 Operating Labor Costs

Operating labor cost is difficult to quantify. The operator is required to be dependable and competent; however, the position is not always full-time. Depending on the size of the system and the other duties available for the operator, the operator's time should be distributed over several accounting categories. Except for days when spent media regeneration or replacement takes place, the treatment plant normally requires less than 1 hr per day of operator attention. During regeneration, the operator may be required to spend approximately 8 hr over a 12-hr period. Where spent media replacement is implemented, the operator time requirement is a function of the size of the system.

On routine operating days, the operator checks the system to see that pH is being controlled, takes and analyzes water samples, checks instruments (flow, temperature, pressure), and makes entries in daily logs. The only exceptions to the normal routine include special activities including but not limited to arsenic analyses in treatment plant lab, equipment maintenance, and chemical tank truck deliveries. During the remainder of the time, the operator is able to operate and maintain other systems (distribution, pumps, storage, etc.), read meters, or handle other municipal responsibilities (e.g., operate sewage treatment plant). There should always be a second operator available to take over in case of an emergency; that individual should be well versed in the operation of the plant.

Using the example treatment plant presented in Appendix B, the cost of operational labor will be as follows (it is assumed that the hours not used for treatment plant operation will be efficiently used on other duties):

Given:

Flowrate:	= 570 gpm
Annual average utilization:	= 50%
Number of regenerations per year:	= 4
Operator annual salary:	= $30,000
Overhead and fringe benefits:	= 30%
Available hours per year:	= 2,000/man

Then:

Number of hours on regeneration/year:	4 × 8	= 32 hr
Number of hours on routine operations/year:	1 × (365–4)	= 361 hr
Number of hours on extra tasks/year:	50 × 3 hr	= 150 hr
Total plant operator time:		= 543 hr

Operator hourly rate:	30,000/2,000 =	$15.00/hr
30% (overhead and fringe benefits):	=	$ 4.50/hr
Operator Rate:		$19.50/hr

Total operator cost: 543 hr/year × $19.50/hr = $10,589/year

Total gallons water produced:
0.5(570 gpm) × 1,440 min/day × 365 days/year = 149,800,000 gal/year

Labor cost/1,000 gal: $10,589/149,800 (1,000 gal) = $0.07/1,000 gal.

If the operator had no other responsibilities and the operator's entire salary were expended against this treatment plant operation, the operating labor cost would become $0.25/1,000 gal. Obviously, there are many variables, which can be controlled in different ways. Depending on the operational philosophy of the designer/planner/manager, the operating labor cost can be minimized or maximized over a very broad range. In the case of a very high production plant, the operating labor requirement is not significantly larger than that for a very small treatment plant. Therefore, depending on relative salaries, the resulting cost per 1,000 gal can range from a few cents to more than a dollar. In proper perspective, the operating labor cost should fall in the $0.02 to $0.30/1,000-gal range.

If the treatment plant in the example in Appendix B had used automatic operation in place of manual operation, the operating labor costs might be lower. However, because a higher skilled operator is required to maintain and calibrate the more sophisticated instrumentation and control equipment, the operating labor cost may not be lower. Therefore, no reduction of operating labor cost is assumed for systems with automatic operation.

For the example presented in Appendix B, there are three additional operational concepts for which labor costs should be considered. They are as follows:

The first concept applies to the activated alumina method with spent media replacement and pH adjustment. For that operational concept, the treatment runs are the same duration and the day-to-day operator requirements are the same. However, the media replacement effort for a large treatment vessel is larger. The resulting labor requirement and resulting costs are as follows:

Number of hours on spent media replacement/year:	4 × 20	= 80 hr
Number of hours on routine operations/year:	1 × (365–4)	= 361 hr
Number of hours on extra tasks/year:	50 × 3 hr	= 150 hr

Total plant operator time: 591 hr

Total labor cost: 591 hr/year × $19.50/hr = $11,525/year

Labor cost/1,000 gal:
$11,525/149,800 (1,000 gal) = $0.08/1,000 gal.

The second concept applies to the activated alumina example method with spent media replacement without pH adjustment. This operational concept entails much lower media arsenic capacity. For this example, the activated alumina media capacity reduces from 38,940 mg/ft^3 (600 grains/ft^3) to 5,192 mg/ft^3 (80 grains/ft^3). The spent media replacement frequency increases from 4/year to 30/year.

The resulting labor requirements and tasks are as follows:

Number of hours on spent media replacement/year:	30 × 12	=	360 hr
Number of hours on routine labor requirements/year:	1 × (365–30)	=	335 hr
Number of hours on extra tasks/year:	20 × 3 hr	=	60 hr
Total plant operator time:			755 hr

Total labor cost: 755 hr/year × $19.50/hr = $14,723/year

Labor cost/1,000 gal:
$14,723/149,800 (1,000 gal) = $0.098/1,000 gal.

The third concept applies to the other adsorptive media that can be applied to arsenic removal treatment system with spent media replacement without pH adjustment. Furthermore, the arsenic removal capacity may be such that the spent media need only be replaced once per year. The resulting labor and cost requirements are as follows:

Number of hours on spent media replacement/year:	1 × 20	=	20 hr
Number of hours on routine operations/year:	1 × (365–1)	=	364 hr
Number of hours on extra tasks/year:	20 × 3 hr	=	60 hr
Total plant operator time:			444 hr

Total labor cost: 444 hr/year × $19.50/hr = $8,658/year

Labor cost/1,000 gal:
$8,658/149,800 (1,000 gal) = $0.06/1,000 gal.

6.2.3 Utility Cost

The utility cost is normally electric utility. However, there also can be telephone and natural gas (or oil) utility costs. Telephone service to the treatment building is recommended as a safety precaution in case of accident as well as operator convenience. Cost for that service should be the minimum available monthly rate. Depending upon the local climate, the cost for heating can vary. The purpose of the building is to protect the equipment from elements (primarily freezing), not for operator comfort. Normally the treatment units act as heat sinks, maintaining an insulated building at a temperature near that of the raw water. In cold climates, the building should have an auxiliary heat source to prevent freezing of pipes in the event that the water is not flowing. If the client determines that the treatment building is to serve additional functions, heating to a comfort temperature could be an additional required cost.

Electric power will be needed for the following functions:

1. Chemical pumps
2. pH controls
3. Caustic storage tank immersion heater
4. Lighting
5. Convenience receptacle
6. Aeration unit blower (optional)
7. Repressurization pump (optional)
8. Extra load on well pump for regeneration/backwash wastewater, and loss of head through the treatment system.

Items 1, 2, 4, and 5 are negligible. Item 3 is a function of the climate and the heat losses through the insulation. Provisions to conserve energy for this function should be incorporated. Item 6 is a relatively small load (1-3 hp blower motor). Item 7 is potentially the biggest electrical load. This requirement only exists when aeration is used to adjust treated water pH, and the water is pumped to an elevated storage tank. This electrical load can be equal to the well pump motor load. However, when repressurization is a requirement, then the well pump should be modified to reduce its discharge pressure capability to only that which is required to pump the raw water through treatment into the clearwell in place of the pressure to pump to the elevated storage tank. Then the net increase of electrical energy consumption is nearly negated. Item 8 amounts to 3-5% of the well pump electrical energy consumption.

The electrical utility rates also vary considerably from one geographic location to another. In August 2001, rates varied from $0.03 to $0.20/kWh. The electrical utility cost can range from $0.005 to $0.02 per 1,000 gal under normal conditions. Under abnormal conditions, the cost could be 5¢/1,000 gal or higher.

6.2.4 Replacement Treatment Media Cost

The consumption of treatment media per regeneration for a system with process water pH adjustment and spent media regeneration in a well-operated activated alumina arsenic removal water treatment plant should be 5% of the bed volume. However, there are additional ways in which the media can be lost.

The loss of media occurs during regeneration. In order to remove virtually all of the arsenic from the grains of activated alumina with a 5% NaOH regenerant solution, a small amount of aluminum is dissolved. This is a process requirement because the attractive forces between the arsenic and the alumina are extremely strong.

During regeneration and neutralization, excessively high and/or low pH contact will attack the treatment media. If the pH of the regeneration solution exceeds the recommended 5% NaOH, the solution becomes increasingly aggressive to the activated alumina. Similarly, if the pH of the neutralization solution is lower than pH 2.0, a more severe dissolving of the alumina takes place. Samples taken during the regeneration cycle should periodically be analyzed for aluminum.

Backwash, if conducted carelessly, also can result in media carry over. An excessive backwash rate can expand the treatment media by an amount that carries the adsorptive media out of the vessel resulting in loss of media. Monitoring the backwash water will detect and provide prevention of that. If backwash water flows into the wastewater surge tank, the lost media can be recovered.

A final way for the media to be lost is through the effluent underdrain (collection system) within the bed. If media grains ever appear in the treated effluent, the treatment unit should be immediately taken out of service for inspection (and repair) of the collection system.

Media replacement costs are difficult to predict. Significant media replacement can occur at a treatment plant where backwash at an excessive rate for an extensive period has been required to remove filtered solids from the media. A plant in which suspended solids in the raw water require frequent extended backwashing is vulnerable to loss of media problems. For systems encountering such conditions an upstream filter (e.g., bag filter) should be evaluated.

A typical pricing structure for a representative activated alumina product suitable for arsenic removal is provided in Table 6-1.

Table 6-1. Price for Typical –28, +48 Mesh Activated Alumina

Quantity	Price[(a)]
2,000–10,000 lb	$1.00/lb
12,000–20,000 lb	0.90/lb
22,000–38,000 lb	0.75/lb
40,000 lb and over	0.70/lb

(a) August 2001 prices.

A conservative bed replacement estimate is 20% per year. In the example in Appendix B where two 380 ft^3 beds are used, the media replacement will be:

$$2 \times 380\ ft^3 \times 45\ lb/ft^3 \times \$.70/lb \times 0.2 = \$4{,}788/year$$

$$\$4{,}788/149{,}800\ (1{,}000\ gal) = \$0.032/1{,}000\ gal.$$

As discussed in Section 6.2.2, there are three additional operational concepts for which replacement media costs will be considered, they are as follows:

The first concept applies to the activated alumina example method with spent media replacement and pH adjustment. As pointed out, four spent treatment beds will be replaced per year.

Therefore, the media replacement cost for this treatment mode is:

$$4/year\ (380\ ft^3)\ (45\ lb/ft^3) \times \$0.70/lb = \$47{,}880/year$$

The replacement treatment media cost/1,000 gal =

$$\frac{\$47{,}880/year}{149{,}800\ (1{,}000\ gal)} = \$0.32/1{,}000\ gal$$

The second concept applies to the activated alumina example method with spent media replacement without pH adjustment. This operational concept entails very low media arsenic capacity. The spent media replacement frequency increases from 4/year to 30/year. Therefore, the media replacement cost for this treatment mode is:

$$30/year\ (380\ ft^3)\ (45\ lb/ft^3) \times \$0.70/lb = \$359{,}100/year$$

The replacement treatment media cost/1,000 gal is

$$\frac{\$359{,}100/\text{year}}{149{,}800\ (1{,}000\ \text{gal})} = \$2.40/1{,}000\ \text{gal}$$

The third concept applies to the other adsorptive media that can be applied to arsenic removal water treatment systems with spent media replacement without pH adjustment. Furthermore, the arsenic removal capacity may be so much greater than activate alumina that the spent media need only be replaced once per year. These media have been reported to cost from $1 to $4/lb.

Therefore, if that arsenic removal capacity is verifiable, then the media replacement cost using $1/lb for this treatment mode is:

$$1/\text{year}\ (380\ \text{ft}^3)\ (45\ \text{lb/ft}^3) \times \$1.00/\text{lb} = \$17{,}100/\text{year}$$

The replacement treatment media cost/1,000 gal is:

$$\frac{\$17{,}100/\text{year}}{149{,}800\ (1{,}000\ \text{gal})} = 0.11¢/1{,}000\ \text{gal}$$

6.2.5 Replacement Parts and Miscellaneous Material Costs

This is a very small operational cost item. Replacement parts (e.g., chemical, pump diaphragms, seals and replacement pump heads) should be kept in stock in the treatment plant, to prevent extended plant shutdown in the event a part is required. Also included are consumables such as laboratory reagents (and glassware), and recordkeeping supplies. An operating cost allowance of $0.01/1,000 gal of treated water is conservative.

6.3 Operating Cost Summary

The range of adsorptive media arsenic removal water treatment plant operating costs discussed above are summarized in Table 6-2. As has been pointed out, the range of costs is very broad.

For adsorptive media arsenic removal water treatment plants in which flowrates, raw water arsenic concentration, raw water analyses (pH, alkalinity, silica, sulfate, etc.), adsorptive media, labor rates, and utility rates vary from the values used in the example in Appendix B, the operating costs will deviate from those indicated in Table 6-2. The information included in this subsection provides a method for the determination of an operating cost estimate for any adsorptive media arsenic removal water treatment plant.

Table 6-2. Operating Cost Tabulation for an Activated Alumina Plant[(a)]

Operating Cost Items Flowrate: 570 gpm Manual Operation	Dollars/1,000 Gal Treated Water			
	Activated Alumina with Spent Media Replacement without pH Adjustment	Activated Alumina with Spent Media Replacement with pH Adjustment	Activated Alumina with Spent Media Regeneration with pH Adjustment	Other Adsorptive Media with Spent Media Replacement without pH Adjustment[(c)]
Treatment Chemicals – acid	0.00	0.08	0.09	0.00
– caustic	0.00	0.22	0.25	0.00
Operating Labor	0.10	0.08	0.07[(b)]	0.06
Utility	0.01	0.02	0.02	0.01
Replacement Treatment Media	2.40	0.32	0.03	0.11
Replacement Part and Misc. Material	0.01	0.01	0.01	0.01
Total	2.52	0.73	0.47	0.19

(a) Wastewater and waste solids, processing and disposal not included.
(b) Applicable to automatic operation.
(c) Cost to oxidize As(III) to As(V) not included.

7.0 References

American Public Health Association–American Water Works Association–Water Environment Federation. *Standard Methods for the Examination of Water and Wastewaters*, 19th ed. A.E. Greenberg (Ed.), American Public Health Association, Washington, DC.

Battelle. 2002. *Cost Estimating Program for Arsenic Removal by Small Drinking Water Facilities*. Developed for the United States Environmental Protection Agency, National Risk Management Laboratory, Cincinnati, OH. December.

Clifford, D., L. Ceber, and S. Chow. 1983. "Arsenic(III)/Arsenic(V) Separation by Chloride-Form Ion-Exchange Resins." Proceedings of the XI AWWA WQTC.

Edwards, M., S. Patel, L. McNeill, H. Chen, M. Frey, A.D. Eaton, R.C. Antweiler, and H.E. Taylor. 1998. "Considerations in As Analysis and Speciation." *J. AWWA* (March): 103-113.

Ficklin, W.H. 1982. "Separation of Arsenic (III) and Arsenic (V) in Groundwaters by Ion Exchange." *Talanta, 30*(5): 371-373.

Ghurye, G., and D. Clifford. 2001. *Laboratory Study on the Oxidation of Arsenic III to Arsenic V*. EPA/600/R-01/021. United States Environmental Protection Agency, National Risk Management Laboratory, Cincinnati, OH.

Lowry, J.D., and S.B. Lowry. 2002. *Oxidaton of As(III) by Aeration and Storage*. EPA/600/R-01/102. United States Environmental Protection Agency, National Risk Management Laboratory, Cincinnati, OH.

Rubel, F. 1981. *Report on Investigation of Alcoa F-1 Activated Alumina for Removal of Excess Arsenic from Potable Water*. Aluminum Company of America, P.O. No. TC331114TC. December 11.

Rubel, F. 1984. *Concept Design Report of Arsenic Removal Water Treatment Plants at Fallon, Nevada*. Department of the Navy, Contract No. N62474-81-C-8532. May 14.

Rubel, F., and F. Williams. 1980. *Pilot Study of Fluoride and Arsenic Removal from Potable Water*. EPA-600/2-80-100. August.

Wang, L., A. Chen, T. Sorg, and K. Fields. 2002. "Field Evaluation of Arsenic Removal by IX and AA." *J. AWWA, 94*:4: 161.

Appendix A

Summary of Subsystems Including Components

The items that are designated as “optional” are not mandatory requirements. Some of those items may already be included in systems other than treatment and therefore, would be redundant. Other items, though desirable, are not mandatory. Automatic and semiautomatic operation is optional. Therefore, for each instrument and control item, though not indicated for clarity, there is an automatic option.

For Schematic Flow Diagram, see Figure A-1.

1. Raw Water Influent Main
   a. Flow control
   b. Flowrate measurement, flow total
   c. Acid injection for pH adjustment
   d. In-line static mixer
   e. pH measurement, indicator, alarm, and fail-safe control
   f. Pressure indicator
   g. Pressure control (optional)
   h. Backflow preventer
   i. Sample before pH adjustment piped to sample panel (optional)
   j. Sample after pH adjustment piped to sample panel (optional)
   k. Isolation valve
   l. Temperature indicator (optional)

2. Intervessel Pipe Manifold
   a. Process control valves
   b. Pressure indicators
   c. Sample piped to sample panel (optional)

3. Treated Water Effluent Main
   a. Caustic injection for pH adjustment
   b. In-line static mixer
   c. pH measurement, indicator, alarm and fail-safe control
   d. Sample after pH adjustment piped to sample panel (optional)
   e. Pressure indicator
   f. Aeration subsystem(optional)
      i. Air blower (optional)
      ii. Clearwell (optional)
   g. Booster or repressurization pump (optional)
   h. Disinfection injection (optional)
   i. Isolation valve

4. Raw Water Bypass Main
   a. Flow control
   b. Flowrate measurement, flow total
   c. Backflow preventer
   d. Isolation valve

5. Backwash/Regeneration Feed Main (optional)
   a. Flow control
   b. Flowrate measurement, flow total
   c. Caustic injection for pH adjustment
   d. Acid injection for pH adjustment
   e. In-line static mixer
   f. pH measurement
   g. Sample after pH adjustment piped to sample panel (optional)
   h. Backflow preventer
   i. Isolation valve

6. Wastewater Main (optional)
   a. Backflow preventer
   b. Process isolation valves
   c. Acid injection for pH adjustment
   d. Coagulation chemical injection
   e. In-line static mixer
   f. Sample after chemical injection piped to sample panel (optional)

7. Treatment Unit
   a. Pressure vessel
   b. Treatment media
   c. Internal distribution and collection piping
   d. Pressure relief valve
   e. Air/vacuum valve
   f. Operating platform and/or ladder (optional)

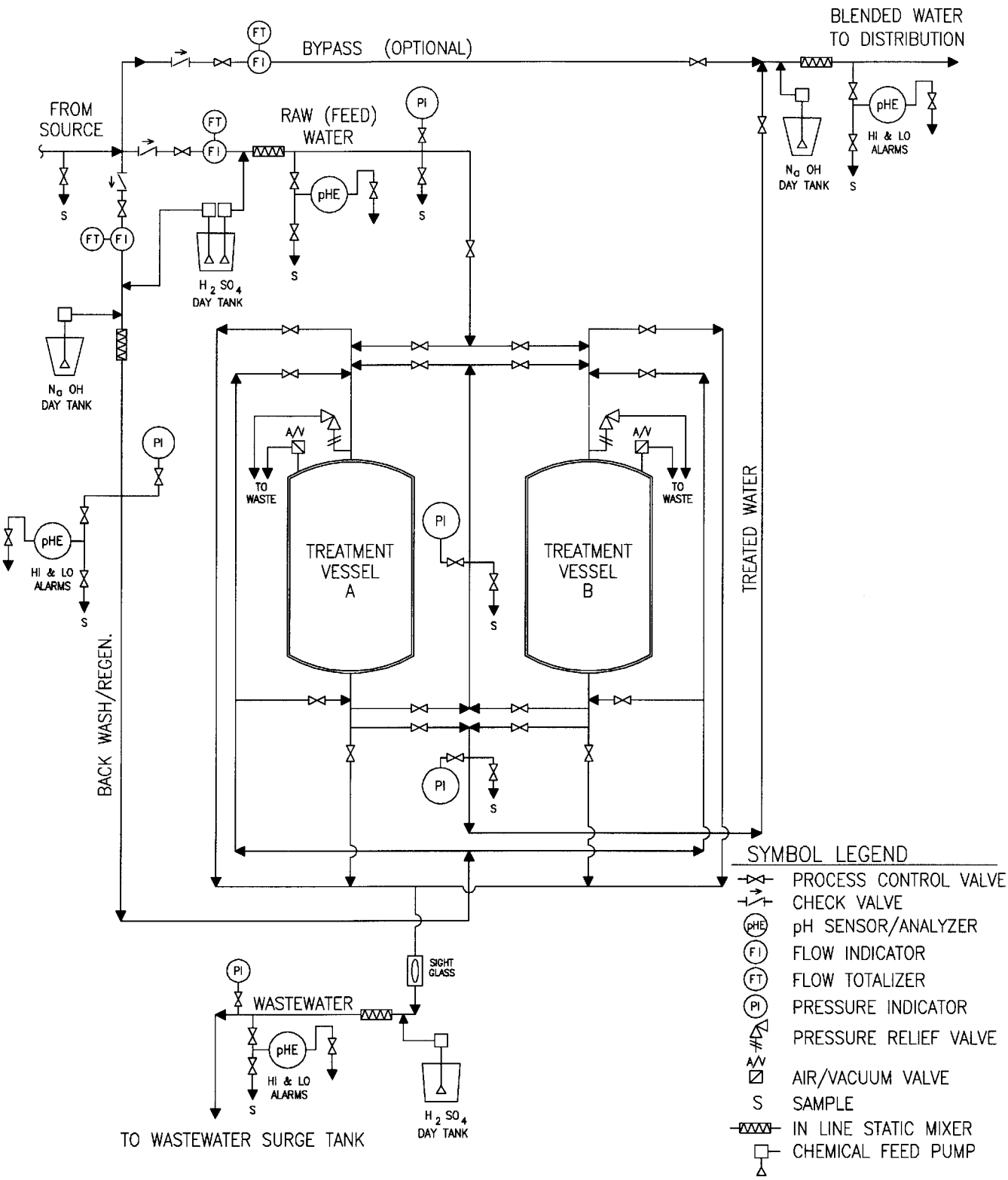

Figure A-1. Flow Diagram for Dual Vessel Series Downflow Treatment System with pH adjustment with Regeneration of Spent Media

8. Sample Panel (optional)
    a. Manifolds
        i. Influent manifold (influent main sample and raw water samples from each treatment vessel after pH adjustment)
        ii. Effluent manifold (effluent main sample after pH adjustment, treated water samples from each treatment vessel and wastewater manifold sample after pH adjustment and chemical injection)
        iii. pH indicator (influent sample manifold and effluent sample manifold)
        iv. Sample collection spigots with drain
    b. Wet chemistry laboratory bench with equipment, glassware, reagents, etc.

9. Acid Storage and Feed Subsystem
    a. Emergency shower and eyewash, signage
    b. Acid storage tank (outside treatment building)
        i. Fill, discharge, drain, vent, and overflow piping
        ii. Liquid level sensor (optional)
        iii. Desiccant air dryer in vent (optional)
        iv. Weather protection
        v. Containment basin
    c. Acid day tank (inside treatment building)
        i. Fill pipe float valve
        ii. Drain valve
        iii. Containment basin
    d. Acid pumps
        i. Treatment unit pH adjustment
        ii. Neutralization pH adjustment
        iii. Wastewater pH adjustment (optional)
    e. Acid piping (interconnecting piping)
        i. Between storage tank and day tank
        ii. Between feed pumps and raw water injection point
        iii. Between feed pumps and regeneration feed and wastewater mains injection points (optional)
        iv. Backflow prevention

10. Caustic Storage and Feed Subsystem
    a. Emergency shower and eye wash, signage
    b. Caustic storage tank (outside treatment building)
        i. Fill, discharge, drain, vent, and overflow piping
        ii. Liquid level sensor (optional)
        iii. Immersion heater with temperature control
        iv. Weather protection
        v. Containment basin (optional)
    c. Caustic day tank (inside treatment building)
        i. Fill line float valve
        ii. Drain valve
        iii. Containment basin (optional)
    d. Caustic piping (interconnecting piping)
        i. Between storage tank and day tank
        ii. Between feed pump and, regeneration feed main injection point (optional)
        iii. Between feed pump and treated effluent main injection point (optional)
        iv. Backflow prevention

11. Backwash Water Disposal System (optional)
    a. Surge tank (optional)
    b. Unlined evaporation pond (optional)
    c. Sewer (optional)
    d. Drainage ditch (optional)
    e. Other discharge method (optional)

12. Toxic Regeneration Wastewater Disposal System
    a. Surge tank (optional)
    b. Wastewater reclamation system (optional)
    c. Other discharge method (optional)

Appendix B

Treatment System Design Example

This design example is applicable to a specific manually operated activated alumina arsenic removal water treatment system employing treatment process pH adjustment and regeneration of spent treatment media. This design example is adaptable to any other arsenic removal adsorptive media treatment system by deletion of equipment and/or adjustment of equipment size as described in Chapter 3.0. This example is applicable to any of the following combinations of options:

1. Replacement of spent media in place of regeneration
2. Deletion of treatment process pH adjustment
3. Application of other adsorptive media in place of activated alumina
4. Adjustment of EBCT
5. Adjustment of flowrate
6. Adjustment of arsenic concentration
7. Adjustment of raw water chemical analysis
8. Automatic operation in place of manual operation.

Given:
q (flowrate) = 570 gpm
N (number of treatment trains) = 1
n (number of treatment vessels/train) = 2
Raw water arsenic concentration = 0.100 mg/L
Arsenic MCL = 0.010 mg/L
Treated water arsenic design concentration = 0.008 mg/L (max)
Activated alumina arsenic removal capacity = 1,376 g/m^3 (600 grains/ft^3)
(Note: Indicated capacity applies only to system with raw water 0.100 mg/L arsenic concentration and treatment process pH adjusted to 5.5)
M_d (media density) = 45 lb/ft^3
EBCT = 5 min
Pipe material–Type I Schedule 80 PVC,
v (pipe velocity) = 5 ft/second (max.)
p (system pressure): 50 psig (max.)
T (ambient temperature): 95°F (max.)
T_w (water temperature): 85°F (max.)

1. Vessel and Treatment Bed Design (reference: Figure 3-5)

Solve for: h (treatment bed depth)
d (treatment bed diameter)
A (treatment bed horizontal surface area)
V (treatment bed volume)
M_w (total weight of treatment media)
D (vessel outside diameter)
H (vessel overall height)

When EBCT = 5 min, then flowrate = 1½ gpm/ft^3 media.

Then, q = 570 gpm; therefore

$$V = \frac{570 \text{ gpm}}{1.5 \text{ gpm/ft}^3} = 380 \text{ ft}^3$$

Then, when h = 5 ft,

$$A = \frac{V}{h} = \frac{380 \text{ ft}^3}{5 \text{ ft}} = 76 \text{ ft}^2$$

Then, $d^2 = \frac{4A}{\pi} = \frac{4 \times 76 \text{ ft}^2}{\pi} = 96.76 \text{ ft}^2$

Then, d = 9.83 ft = 9• 10•

Then, D = d + 1• = 9• 11•, therefore use D = 10• 0• (then, A = 77.2 ft^2)

Then, $V = \frac{(9.92)^2 \times 5\pi}{4} = 386 \text{ ft}^3$

Then, M_w = 2 vessels × 386 ft^3 × 45 lb/ft^3 = 34,800 lb

Because the media quantity is almost a 40,000 lb truckload, it is prudent to procure a truckload quantity.

Then the treatment vessel dimensions (see Figure 3-5) are as follows:

$$H = h + h/2 + 6• + (2)D/4 + 1• =$$

$$60• + 30• + 6• + 2\ (120•/4) + 1• = 157• = 13•\ 1•$$

D = 10•0•

2. Pipe Sizing

Solve for: Sizes for all water pipe mains

Mains: q = 570 gpm (max)
Try 6•, v = 6.5• / sec. > 5• / sec., therefore NG
Try 8•, v = 3.6• / sec. < 5• / sec., therefore OK
<u>Use 8• Schedule 80 PVC</u>

Backwash rate is not to exceed rate required for 50% treatment bed expansion.

Then, backwash rate = A × 7 gpm/ft^2 = 77.2 ft^2 × 7 gpm/ft^2 = 540 gpm <570 gpm, therefore OK. (Note: The backwash rate is sensitive to water temperature.)

3. Acid Subsystem Design
(Note: This subsystem is not applicable for systems that do not include treatment process pH adjustment.)

a. Storage Tank Size

Storage tank size is based upon logistical requirements which are a function of treatment plant acid consumption rate and bulk tank truck deliveries of acid. The tank truck can deliver up to 48,000 lb of 66°B• H_2SO_4. The density of this liquid is 15.5 lb/gal. Therefore, a delivery contains 3,100 gal.

In this example the peak treatment flow is 570 gpm, and it is assumed that the acid consumption (determined by titration) is 0.05 gal/1,000 gal treated water. Then the acid consumption is 1.71 gal/hr. Then, a tank truckload would supply a minimum of 1,800 hr of treatment operation. Acid consumption for raw water pH reduction, which is a function of total alkalinity and free CO_2, is discussed in Appendix C.

A 5,000-gal acid storage tank provides capacity for more than 1½ bulk tank truckloads of 66°B• H_2SO_4. Therefore, when half a truckload has been consumed (providing capacity for the next truckload delivery), there is a minimum of a 900-hr (37 days) acid supply available in storage before the acid supply is exhausted.

b. Day Tank Size

The storage tank supplies a polypropylene day tank located inside of the treatment building. A 100-gal day tank will satisfy more than 200% of the maximum treatment process pH adjustment acid requirements (41 gal/day) for maximum treatment flow of 820,800 gal for one day.

c. Acid Pump Size

The acid feedrate required for the treatment process pH adjustment function is: 570 gpm × 60 min/hr × 0.05 gal acid/1,000 gal water = 1.71 gph

The acid feedrate required for the treatment process pH adjustment function (1.71 gph) is satisfied by a positive displacement diaphragm pump that has a maximum flowrate of 2.5 gph @ 50 psig with a 1,000:1 turndown capability (materials of construction to be recommended for 66°B• H_2SO_4 service).

For neutralization of the treatment bed after completion of regeneration and the regeneration wastewater flowing from the treatment vessel to the regeneration wastewater surge tank two additional acid feed pumps are required (Note: For systems that replace spent media in place of regeneration, this equipment is not applicable.) The rule of thumb relating to the volume of acid required to be applied to accomplish both functions is 1 gal/ft^3 (activated alumina), or 386 gal/regeneration. The acid feed for these two functions will take place over a period of 4 to 6 hr. The first pump feeds acid into the regeneration feedwater main to adjust the pH initially to 2.5, then to 4.0, and finally at completion of the neutralization to 5.5. The second pump feeds acid into the wastewater main at a rate required to adjust the pH of the entire wastewater batch to a range of 6.0 to 6.5. This latter acid feed requirement can take place at a constant rate that will provide the necessary wastewater pH for the volume of the entire wastewater batch (thoroughly mixed in the wastewater surge tank) at the conclusion of the regeneration process. The two acid feed pumps required for the two functions can be identical air-operated diaphragm pumps with maximum flowrate of 2 gpm at 50 psig with a 100:1 turndown capacity (materials of construction to be recommended for 66°B• H_2SO_4 service).
A 5-hp air compressor with a 60-gal receiver capable of supplying 14.7 cfm at 175 psig compressed air. The air compressor will supply compressed air for both air-operated diaphragm acid

feed pumps, the air-operated diaphragm caustic soda feed pump, and (for automatic operation) the pneumatic-operated process control butterfly valves. If there is a wastewater sludge dewatering system, the air compressor will be available to operate the air-operated diaphragm pump (for sludge transfer) and the plate and frame filter press.

4. Caustic Subsystem Design
(Note: This subsystem is not applicable for systems that do not include treatment process pH adjustment)

a. Storage Tank Size

Storage tank size is based upon logistical requirements which are a function of treatment plant caustic consumption rate and bulk tank truck deliveries of caustic. The tank truck can deliver up to 48,000 lb of 50% NaOH. The density of this liquid is 12.9 lb/gal. Therefore, a delivery contains 3,700 gal.

In this example the peak treatment flow is 570 gpm, and it is assumed that the caustic consumption (determined by titration) is 0.135 gal/1,000 gal treated water. Then the caustic consumption is 4.6 gal/hr. Then, a tank truckload would supply a minimum of 800 hr of treatment operation.

A 5,000-gal caustic storage tank provides capacity for more than 1¼ bulk tank truckloads of 50% NaOH. Therefore, when 75% of a truckload has been consumed (providing capacity for the next truckload delivery), a minimum of 900 gal remains, which provides a 200-hr (8-day) caustic supply available in storage before the caustic supply is exhausted. Note: When the supply remaining in the storage tank provides capacity for a bulk tank truck delivery, spent media regeneration (if applicable) will be deferred until after caustic delivery.

b. Day Tank Size

The storage tank supplies a polypropylene day tank located inside of the treatment building. A 500-gal day tank will satisfy more than 200% of the maximum treatment process pH adjustment caustic requirements (110 gal/day) for maximum treatment flow of 820,800 gal for one day as well as the requirement for one step of the two-step spent media regeneration.

c. Caustic Pump Size

The caustic feedrate required for the treatment process pH adjustment function is: 570 gpm × 60 min/hr × 0.135 gal caustic/1,000 gal water = 4.6 gph.

The caustic feedrate required for the treatment process pH adjustment function (4.6 gph) is satisfied by a positive displacement diaphragm pump that has a maximum flowrate of 5 gph @ 50 psig with a 1,000:1 turndown capability (materials of construction to be recommended for 50% NaOH service).

For regeneration of the activated alumina treatment bed two regeneration steps are required utilizing 15 gal of 5% NaOH/ft^3 per step. (Note: For systems that replace spent media in place of regeneration this equipment is not applicable.)

The following calculations provide the volume and flowrate of 50% NaOH required per regeneration.

<u>Given</u>:
d_1 = density 5% NaOH = 8.8 lb/gal
d_2 = density 50% NaOH = 12.9 lb/gal
v_1 = volume 5% NaOH/regeneration step-ft^3 = 15 gal/step-ft^3
n = number of steps = 2 (upflow and downflow)
V = 386 ft^3 (activated alumina)

<u>Find</u>:
w_1 = weight of 5% NaOH/step-ft^3
v_2 = volume 50% NaOH required/regeneration step

Then: $w_1 = v_1(d_1)$ = 15 gal/ft^3 × 8.8 lb/gal = 132 lb/step-ft^3

Then: 100% NaOH = 132 lb/step-ft^3 × .05 = 6.6 lb/step-ft^3

Then: 50% NaOH =

$$100\%\ \text{NaOH} \times 2 = 13.2\ \text{lb/step - ft}^3 =$$

$$\frac{13.2\ \text{lb/step - ft}^3}{12.9\ \text{lb/gal}} = 1\ \text{gal/step - ft}^3$$

Then: v_2 = 1 gal/step-ft^3 × 386 ft^3 = 386 gal/step

Then: If, step duration is 60 min,

$$50\%\ \text{NaOH flowrate} = \frac{386\ \text{gal}}{60\ \text{minutes}} = 6.4\ \text{gpm}$$

Then: Total 50% NaOH required per regeneration = $v_2 \times n$ = 386 gal/step × 2 steps = 772 gal.

The caustic feed pump required for this function will be an air-operated diaphragm pump with maximum flowrate of 15 gpm at 50 psig with 100:1 turndown capability (materials of construction to be recommended for 50% NaOH service. The recommended air compressor for the acid air-operated diaphragm pumps also will provide the compressed air for this function.

5. Regeneration Wastewater Surge Tank Design

Given:
Maximum volume of regeneration wastewater per cubic foot media = 400 gal/ft^3
Number of cubic feet of media per regeneration = 386 ft^3
Tank construction – epoxy interior lined carbon steel

Find:
Volume of wastewater per regeneration = 400 gal/ft^3 × 386 ft^3 = 155,000 gal = 20,600 ft^3

Dimensions of surge tank (use height = 20 ft)

$$\text{Then, (diameter)}^2 = \frac{4 \times 20{,}600\ \text{ft}^3}{\pi \times 20\ \text{ft}} = 1{,}310\ \text{ft}^2$$

Then, diameter = 36 ft

Then tank dimensions = 36• ϕ × 20• h

Suggested Containment Basin Dimensions: length 80 ft, width 72 ft, height 4 ft; volume = 22,430 ft^3 = 168,200 gal >155,000 gal.

Appendix C

Discussion of Acid Consumption Requirements for pH Adjustment of Raw Water

This manual discusses acid titration as the practical method used to determine the acid feed requirement for lowering the raw water pH to 5.5. However, this also can be accomplished theoretically when a raw water analysis is available and raw water samples are not. This method requires the pH, the total alkalinity (M as mg/L $CaCO_3$), and/or the free carbon dioxide (CO_2 as mg/L) from the raw water analysis in addition to the graph illustrated in Figure C-1. If only two of the three raw water analysis items are available, the third is determined by the graph. The pH curves illustrated in Figure C-1 were developed from theoretical chemical formulae which integrate the relationship between pH, alkalinity and free CO_2.

Trial-and-error usage of these curves rapidly leads the user to the acid feed requirement for the desired pH adjustment. The objective is to determine the amount of alkalinity reduction that is required to lower the pH to the desired amount, and then to convert the alkalinity reduction to acid addition. The user should be aware of the fact that the reduction in alkalinity coincides with the corresponding increase in free CO_2. The following examples best illustrate this method:

Example 1:

<u>Given</u>:
Raw water pH = 8.0
Raw water M = 220 mg/L as $CaCO_3$
Raw water CO_2 = 4 mg/L

<u>Find</u>:
1. M and free CO_2 for pH adjusted to 5.5
2. 66°B• H_2SO_4 required feedrate to adjust pH to 5.5

1. Try reducing M by 200 mg/L (as $CaCO_3$) to 20 mg/L (as Ca CO_3)

   Then, increase in free CO_2 (M multiplied by 0.88), 200 × 0.88 = 176 mg/L

   Then, total free CO_2 = 176 + 4 = 180 mg/L

   Then, using graph we find that the pH is 5.4 when:

   a. M = 20 mg/L (as $CaCO_3$)
   b. CO_2 = 180 mg/L. Therefore, NG.

   Therefore, too much alkalinity was removed. Try reducing M by 196 mg/L (as $CaCO_3$) to 24 mg/L (as $CaCO_3$).

   Then, increase in free CO_2 = 196 mg/L × 0.88 = 172.5 mg/L

   Then, total free CO_2 = 172.5 + 4 = 176.5 mg/L.

   Then, using graph we find that the <u>adjusted raw water pH is 5.5</u> when:

   a. M = 24 mg/L $CaCO_3$
   b. CO_2 = 176.5 mg/L. Therefore, OK.

2. For each 100 mg/L (as $CaCO_3$) reduction of total alkalinity, 105 mg/L 66°B• H_2SO_4 will be added. Therefore, reduce M by 196 mg/L (as $CaCO_3$) by feeding 1.96 mg/L ($CaCO_3$) × 105 mg/L H_2SO_4/mg/L $CaCO_3$ = <u>205.8 mg/L H_2SO_4 to adjust raw water pH to 5.5.</u> If we desire to find what acid feedrate would be required per 1,000 gal of treated water, we find that:

$$\text{Feedrate} = (205.8 \times 10^{-6}\ \text{mg/L}) \times (1{,}000\ \text{gal} \times 8.34\ \text{lb/gal}) / (15.5\ \text{lb/gal}) = 0.11\ \text{gal}\ H_2SO_4 / 1{,}000\ \text{gal water}$$

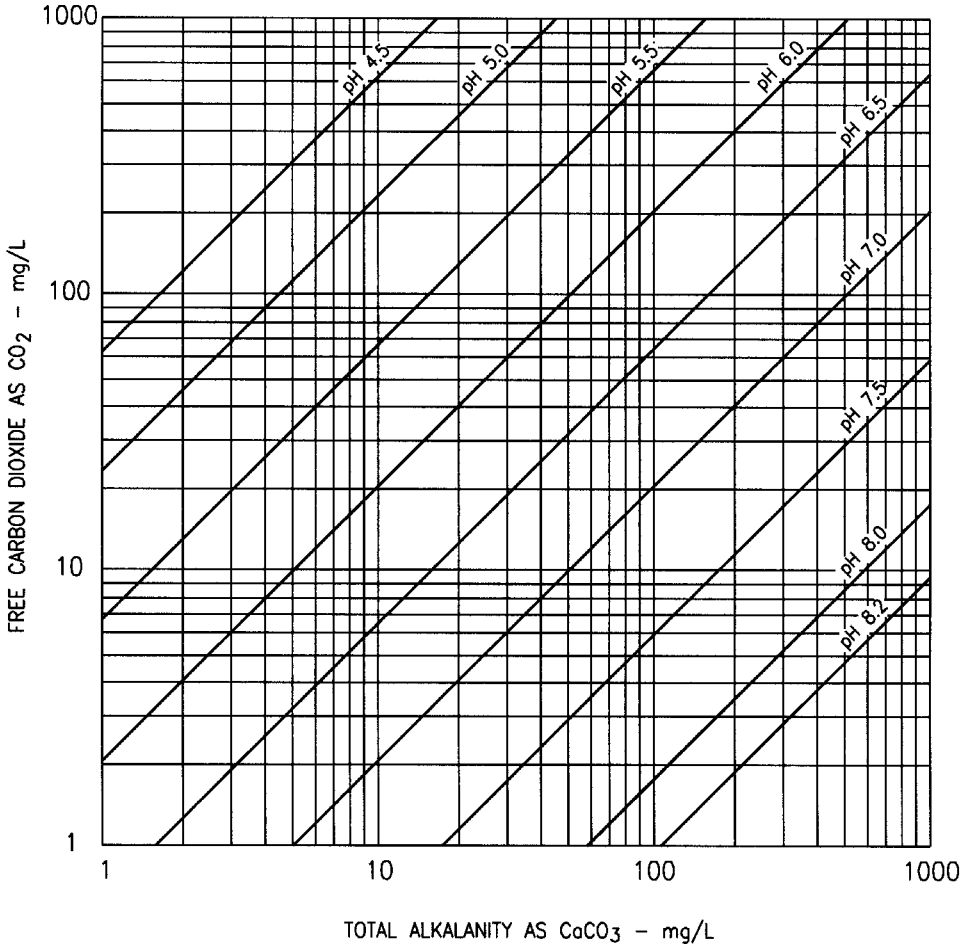

Figure C-1. Graph of pH as a Function of Total Alkalinity and Free Carbon Dioxide

Example 2:

Given:
Raw water M = 100 mg/L (as $CaCO_3$)
Free CO_2 = 6 mg/L

Find:
1. Raw water pH
2. M and free CO_2 for pH adjusted to 5.5
3. 66°B• H_2SO_4 required feedrate to adjust pH to 5.5

1. From graph we find raw water pH to be 7.5

2. Try reducing M by 80 mg/L (as $CaCO_3$) to 20 mg/L (as $CaCO_3$)

   Then, increase in free CO_2 = 80 × 0.88 = 70.4 mg/L

   Then, total free CO_2 = 70.4 + 6 = 76.4 mg/L

   Then, using the graph we find the adjusted pH to be 5.75 when:

   a. M = 20 mg/L (as $CaCO_3$)
   b. CO_2 = 76.4 mg/L. Therefore, NG.

   Therefore, too little alkalinity was removed, try reducing M by 87 mg/L (as $CaCO_3$) to 13 mg/L $CaCO_3$).

   Then, increase in free CO_2 = 76.5 + 6 = 82.5 mg/L

   Then, using the graph we find the adjusted pH to be 5.55 when:

   a. M = 13 mg/L (as $CaCO_3$)
   b. CO_2 = 82.5 mg/L. Therefore, NG.

   Therefore, too little alkalinity was removed; try reducing M by 88 mg/L (as $CaCO_3$) to 12 mg/L $CaCO_3$).

   Then, increase in free CO_2 = 88 × 0.88 = 77.5 mg/L

Then, total free CO_2 = 77.5 + 6 = 83.5 mg/L

Then, using the graph we find the adjusted raw water pH to be 5.5 when:

a. M = 12 mg/L (as $CaCO_3$)
b. CO_2 = 83.5 mg/L. Therefore, OK.

3. Therefore, reduce M by 88 mg/L (as $CaCO_3$) by feeding 0.88 × 105 mg/L H_2SO_4/100 mg/L $CaCO_3$ = 92.4 mg/L 66°B• H_2SO_4 to adjust raw water pH to 5.5

$$\text{Acid feedrate} = (92.4 \times 10^{-6}\ \text{mg/L}) \times (1{,}000\ \text{gal} \times 8.34\ \text{lb/gal}) / (15.5\ \text{lb/gal}) = 0.05\ \text{gal}\ H_2SO_4 / 1{,}000\ \text{gal water}$$

Appendix D

Tabulations of Estimated Capital Cost Breakdowns for Arsenic Removal Water Treatment Plants by Means of the Activated Alumina Process at Typical and Ideal Locations

Contents

D-1 Typical Locations with Manual Operation, Replacement of Spent Media, and Without Process Water pH Adjustment

D-2 Typical Locations with Manual Operation, Replacement of Spent Media, and with Process Water pH Adjustment

D-3 Typical Locations with Manual Operation, Spent Media Regeneration, and with Process Water pH Adjustment

D-4 Typical Locations with Automatic Operation, Spent Media Regeneration, and Process pH Adjustment

D-5 Ideal Locations with Manual Operation, Replacement of Spent Media, and Without Process Water pH Adjustment

D-6 Ideal Locations with Manual Operation, Replacement of Spent Media, and with Process Water pH Adjustment

D-7 Ideal Locations with Manual Operation, Spent Media Regeneration, and with Process Water pH Adjustment

D-8 Ideal Locations with Automatic Operation, Spent Media Regeneration, and Process pH Adjustment

Table D-1. Estimated Capital Cost[(a)] Breakdowns for Central Arsenic Removal Water Treatment Plants at Typical Locations by Means of the Activated Alumina Process With Manual Operation, Replacement of Spent Media, and Without Process Water pH Adjustment (Multiply by $1,000)

Treatment Flowrate (gpm)		50	100	200	300	400	500	600	700
Process Equipment									
Treatment Vessels		26	31	38	55	62	71	76	80
Treatment Media		3	7	13	20	25	30	32	32
Process Piping, etc.		7	9	13	21	21	32	32	32
Instrument and Controls		4	4	5	6	6	7	7	7
Chemical Storage Tanks		N/A	N/A	N/A	N/A	N/A	N/A	N/A	N/A
Chemical Pumps, Piping, etc.		N/A	N/A	N/A	N/A	N/A	N/A	N/A	N/A
	Subtotal	40	51	69	102	114	140	147	151
Process Equipment Installation									
Mechanical		19	24	25	29	29	31	31	31
Electrical		6	6	7	8	9	10	10	10
Painting and Miscellaneous		5	6	8	9	9	10	10	10
	Subtotal	30	36	40	46	47	51	51	51
Misc. Installed Items									
Wastewater Surge Tank		N/A	N/A	N/A	N/A	N/A	N/A	N/A	N/A
Building and Concrete		26	29	35	35	35	40	40	40
Site Work and Miscellaneous		8	9	11	12	13	14	14	14
	Subtotal	34	38	46	47	48	54	54	54
Contingency 10%		11	13	16	20	21	25	26	26
	Total	115	138	171	215	230	270	278	282

(a) August 2001 prices.
Note: Engineering, exterior utility pipe and conduit, wastewater and waste solids processing system, finance charges, real estate cost and taxes not included.

Table D-2. Estimated Capital Cost[(a)] Breakdowns for Central Arsenic Removal Water Treatment Plants at Typical Locations by Means of the Activated Alumina Process With Manual Operation, Replacement of Spent Media, and With Process Water pH Adjustment (Multiply by $1,000)

Treatment Flowrate (gpm)		50	100	200	300	400	500	600	700
Process Equipment									
Treatment Vessels		26	31	38	55	62	71	76	80
Treatment Media		3	7	13	20	25	30	32	32
Process Piping, etc.		8	10	15	24	24	36	36	36
Instrument and Controls		8	8	9	10	10	11	11	11
Chemical Storage Tanks		N/A	N/A	40	40	40	40	40	40
Chemical Pumps, Piping, etc.		3	4	4	5	6	6	6	6
	Subtotal	48	60	119	154	167	194	201	205
Process Equipment Installation									
Mechanical		21	27	29	35	35	43	43	43
Electrical		8	8	10	13	15	17	17	17
Painting and Miscellaneous		6	6	7	11	11	13	13	13
	Subtotal	35	41	46	59	61	73	73	73
Misc. Installed Items									
Wastewater Surge Tank		N/A	N/A	N/A	N/A	N/A	N/A	N/A	N/A
Building and Concrete		34	37	48	58	58	62	62	62
Site Work and Miscellaneous		9	10	12	13	14	15	15	15
	Subtotal	43	47	60	71	72	77	77	77
Contingency 10%		13	15	23	29	30	35	36	36
	Total	139	163	248	313	330	379	387	391

(a) August 2001 prices.
Note: Engineering, exterior utility pipe and conduit, wastewater and waste solids processing system, finance charges, real estate cost and taxes not included.

Table D-3. Estimated Capital Cost[(a)] Breakdowns for Central Arsenic Removal Water Treatment Plants at Typical Locations by Means of the Activated Alumina Process With Manual Operation, Spent Media Regeneration, and With Process Water pH Adjustment (Multiply by $1,000)

Treatment Flowrate (gpm)	50	100	200	300	400	500	600	700
Process Equipment								
Treatment Vessels	26	31	38	55	62	71	76	80
Treatment Media	3	7	13	20	25	30	32	32
Process Piping, etc.	11	18	21	32	32	49	49	49
Instrument and Controls	13	13	14	15	15	16	16	16
Chemical Storage Tanks	N/A	N/A	40	40	40	40	40	40
Chemical Pumps, Piping, etc.	6	7	8	10	11	12	13	13
Subtotal	59	76	134	172	185	218	226	230
Process Equipment Installation								
Mechanical	24	30	32	38	38	46	46	46
Electrical	8	8	10	13	15	17	17	17
Painting and Miscellaneous	6	6	7	11	11	13	13	13
Subtotal	38	44	49	62	64	76	76	76
Misc. Installed Items								
Wastewater Surge Tank	20	35	50	75	95	110	130	140
Building and Concrete	34	37	48	58	58	62	62	62
Site Work and Miscellaneous	14	15	18	20	21	23	23	23
Subtotal	68	87	116	153	174	195	215	225
Contingency 10%	17	21	30	39	43	49	52	54
Total	182	228	329	426	466	538	569	585

(a) August 2001 prices.

Note: Engineering, exterior utility pipe and conduit, wastewater and waste solids processing system, finance charges, real estate cost and taxes not included.

Table D-4. Estimated Capital Cost[(a)] Breakdowns for Central Arsenic Removal Water Treatment Plants at Typical Locations by Means of the Activated Alumina Process With Automatic Operation, Spent Media Regeneration, and Process pH Adjustment (Multiply by $1,000)

Treatment Flowrate (gpm)	50	100	200	300	400	500	600	700
Process Equipment								
Treatment Vessels	26	31	38	55	62	71	76	80
Treatment Media	3	7	13	20	25	30	32	32
Process Piping, etc.	17	25	29	42	42	64	64	64
Instrument and Controls	58	60	61	63	63	66	66	66
Chemical Storage Tanks	N/A	N/A	40	40	40	40	40	40
Chemical Pumps, Piping, etc.	7	8	9	11	12	13	14	14
Subtotal	111	131	190	231	244	284	292	296
Process Equipment Installation								
Mechanical	29	35	37	44	44	51	51	51
Electrical	28	28	30	33	35	41	41	41
Painting and Miscellaneous	6	6	7	11	11	13	13	13
Subtotal	63	69	74	88	90	105	105	105
Misc. Installed Items								
Wastewater Surge Tank	20	35	50	75	95	110	130	140
Building and Concrete	34	37	48	58	58	62	62	62
Site Work and Miscellaneous	14	15	18	20	21	23	23	23
Subtotal	68	87	116	153	174	195	215	225
Contingency 10%	25	29	38	48	51	59	62	63
Total	267	316	418	520	569	643	674	689

(a) August 2001 prices.

Note: Engineering, exterior utility pipe and conduit, wastewater and waste solids processing system, finance charges, real estate cost and taxes not included.

Table D-5. Estimated Capital Cost[(a)] Breakdowns for Central Arsenic Removal Water Treatment Plants at Ideal Locations by Means of the Activated Alumina Process With Manual Operation, Replacement of Spent Media, and Without Process Water pH Adjustment (Multiply by $1,000)

Treatment Flowrate (gpm)	50	100	200	300	400	500	600	700
Process Equipment								
Treatment Vessels	26	31	38	55	62	71	76	80
Treatment Media	3	7	13	20	25	30	32	32
Process Piping, etc.	7	9	13	21	21	32	32	32
Instrument and Controls	4	4	5	6	6	7	7	7
Chemical Storage Tanks	N/A	N/A	N/A	N/A	N/A	N/A	N/A	N/A
Chemical Pumps, Piping, etc.	N/A	N/A	N/A	N/A	N/A	N/A	N/A	N/A
Subtotal	40	51	69	102	114	140	147	151
Process Equipment Installation								
Mechanical	17	22	23	27	27	29	29	29
Electrical	3	3	4	5	6	7	7	7
Painting and Miscellaneous	0	5	7	7	7	8	8	8
Subtotal	24	30	34	39	40	44	44	44
Misc. Installed Items								
Wastewater Surge Tank	N/A	N/A	N/A	N/A	N/A	N/A	N/A	N/A
Building and Concrete	3	3	3	4	4	5	5	5
Site Work and Miscellaneous	0	0	0	0	0	0	0	0
Subtotal	3	3	3	4	4	5	5	5
Contingency 10%	7	9	11	15	16	19	20	20
Total	74	93	117	160	174	208	216	220

(a) August 2001 prices.
Note: Engineering, exterior utility pipe and conduit, wastewater and waste solids processing system, finance charges, real estate cost and taxes not included.

Table D-6. Estimated Capital Cost[(a)] Breakdowns for Central Arsenic Removal Water Treatment Plants at Ideal Locations by Means of the Activated Alumina Process With Manual Operation, Replacement of Spent Media, and With Process Water pH Adjustment (Multiply by $1,000)

Treatment Flowrate (gpm)	50	100	200	300	400	500	600	700
Process Equipment								
Treatment Vessels	26	31	38	55	62	71	76	80
Treatment Media	3	7	13	20	25	30	32	32
Process Piping, etc.	8	10	15	24	24	36	36	36
Instrument and Controls	8	8	9	10	10	11	11	11
Chemical Storage Tanks	N/A	N/A	0	0	0	0	0	0
Chemical Pumps, Piping, etc.	3	4	4	5	6	6	6	6
Subtotal	48	60	79	114	127	154	161	165
Process Equipment Installation								
Mechanical	19	25	27	33	33	40	40	40
Electrical	5	5	7	10	12	14	14	14
Painting and Miscellaneous	4	4	5	9	9	11	11	11
Subtotal	28	34	39	52	54	65	65	65
Misc. Installed Items								
Wastewater Surge Tank	N/A	N/A	N/A	N/A	N/A	N/A	N/A	N/A
Building and Concrete	3	3	3	4	4	5	5	5
Site Work and Miscellaneous	0	0	0	0	0	0	0	0
Subtotal	3	3	3	4	4	5	5	5
Contingency 10%	8	10	12	17	19	22	24	24
Total	87	107	128	187	204	236	255	259

(a) August 2001 prices.
Note: Engineering, exterior utility pipe and conduit, wastewater and waste solids processing system, finance charges, real estate cost and taxes not included.

Table D-7. Estimated Capital Cost[(a)] Breakdowns for Central Arsenic Removal Water Treatment Plants at Ideal Locations by Means of the Activated Alumina Process With Manual Operation, Spent Media Regeneration, and With Process Water pH Adjustment (Multiply by $1,000)

Treatment Flowrate (gpm)		50	100	200	300	400	500	600	700
Process Equipment									
Treatment Vessels		26	31	38	55	62	71	76	80
Treatment Media		3	7	13	20	25	30	32	32
Process Piping, etc.		11	18	21	32	32	49	49	49
Instrument and Controls		13	13	14	15	15	16	16	16
Chemical Storage Tanks		N/A	N/A	0	0	0	0	0	0
Chemical Pumps, Piping, etc.		6	7	8	10	11	12	13	13
	Subtotal	59	76	94	132	145	178	186	190
Process Equipment Installation									
Mechanical		21	27	29	35	35	43	43	43
Electrical		4	4	6	9	11	13	13	13
Painting and Miscellaneous		4	4	5	9	9	11	11	11
	Subtotal	29	35	40	53	55	67	67	67
Misc. Installed Items									
Wastewater Surge Tank		0	0	0	0	0	0	0	0
Building and Concrete		3	3	3	4	4	5	5	5
Site Work and Miscellaneous		0	0	0	0	0	0	0	0
	Subtotal	3	3	3	4	4	5	5	5
Contingency 10%		10	12	14	19	21	25	26	27
	Total	101	126	151	208	225	274	284	289

(a) August 2001 prices.
Note: Engineering, exterior utility pipe and conduit, wastewater and waste solids processing system, finance charges, real estate cost and taxes not included.

Table D-8. Estimated Capital Cost[(a)] Breakdowns for Central Arsenic Removal Water Treatment Plants at Ideal Locations by Means of the Activated Alumina Process With Automatic Operation, Spent Media Regeneration, and Process pH Adjustment (Multiply by $1,000)

Treatment Flowrate (gpm)		50	100	200	300	400	500	600	700
Process Equipment									
Treatment Vessels		26	31	38	55	62	71	76	80
Treatment Media		3	7	13	20	25	30	32	32
Process Piping, etc.		17	25	29	42	42	64	64	64
Instrument and Controls		58	60	61	63	63	66	66	66
Chemical Storage Tanks		N/A	N/A	0	0	0	0	0	0
Chemical Pumps, Piping, etc.		7	8	9	11	12	13	14	14
	Subtotal	111	131	150	191	204	244	252	256
Process Equipment Installation									
Mechanical		26	32	34	41	41	48	48	48
Electrical		23	23	25	28	30	36	36	36
Painting and Miscellaneous		4	4	5	9	9	11	11	11
	Subtotal	53	59	64	78	80	95	95	95
Misc. Installed Items									
Wastewater Surge Tank		0	0	0	0	0	0	0	0
Building and Concrete		4	4	4	5	5	6	6	6
Site Work and Miscellaneous		0	0	0	0	0	0	0	0
	Subtotal	4	4	4	5	5	6	6	6
Contingency 10%		17	20	22	28	29	35	36	36
	Total	185	214	240	302	318	380	389	393

(a) August 2001 prices.
Note: Engineering, exterior utility pipe and conduit, wastewater and waste solids processing system, finance charges, real estate cost and taxes not included.

Appendix E

Alternative Methods for Removing Media from Very Small System Tanks

1. Pressurized Canister

Fabricate a special cap for the top of the adsorptive media tank. Drill two holes in the cap approximately 1 inch in diameter. Screw the cap onto the top of the tank. Attach a hose to each hole. Force raw water into the tank through the first hose. Slowly lower the second flexible plastic hose down through the other opening in the cap to the top of the media level. Turn on the water pressure so as to force media out of the second hose. Pipe the water/media mixture to disposal barrels.

The depth of the escape pipe should be adjustable; probably using a friction fitting through a rubber cap or rubber washer. Movement capability ("wiggle") in the vertical alignment of the escape pipe will allow media to be removed from the lower sides of the media bed.

2. Industrial Wet/Dry Vacuum

Drain the water from the media. Hang a vacuum hose from a support above the tank opening with the open suction end hanging into the media. Vacuum out the media. Remove media from vacuum compartment. For this method, a high-powered motor/fan from an industrial vacuum cleaner has been used, by mounting it on a large barrel. When the first barrel was filled with media, the motor/fan was remounted on the second barrel while the first barrel was capped and made ready for pickup/disposal.

3. Inverter

Drain the water from the media. Construct a piece of equipment out of 2-inch steel angles that is approximately one-half the height of the media tank. The media tank should be strapped to the device and then inverted. The media in the tank will partially fall out into a wide, low-rise, pan. Use a hose stream to flush the inside of the tank clean. Strain out the larger support gravel from the flat pan and return it to the tank, along with new adsorptive media, once the tank is replaced in an upright orientation.

4. Gravity Discharge from a Sidewall Flange

With this process, a gate valve or bolted flange connection should be specified when the pressure tank was being fabricated. The position of this fitting will be approximately at the interface of the support media and adsorptive media. When rebedding, the valve or flange is opened and the media then falls, or is flushed, into a low-rise decant tub, where the water and media are separated. The media then is shoveled into the disposal barrels. The media tanks must be elevated to allow the decant tub to be placed below the outlet gate valve or flange. A process water line should be mounted near the top of the pressure tank to provide the wash water to flush out the media. A small pump will be needed to address the decant water.

Appendix F

English to Metric Conversion Table

English	Multiply by	Metric
Inch	0.0254	meter (m)
Inch^2	0.000645	m^2
inch^3	0.000016	m^3
feet (ft)	0.3048	m
ft^2	0.0929	m^2
ft^3	0.0283	m^3
gallon (gal)	0.2642	liter (L)
gal	0.0038	m^3
gal	0.0038	kiloliter (kL)
grains (gr)	0.0649	gram (g)
gr/ft^3	2.2919	g/m^3
pounds (lb)	0.4545	kilogram (kg)
lb/inches^2 (psi)	0.00689	megapascals (MP)
lb/ft^2 (psf)	4.8922	kg/m^2
c/1,000 (gal)	0.2642	c/1,000 L