## LEGEND

- GRANITE BND
- GRANITE BND W/DH
- MARBLE BND W/DH
- MARBLE BND
- CONC H BND
- CONC BND W/DH
- IP FOUND
- IP W/CAP
- GUN BARREL FND
- DRILL HOLE–SURVEY CONTROL PT.
- PTS STAKE
- MAG NAIL
- PK NAIL
- WIRE FENCE
- EDGE OF TREELINE
- WOOD FENCE
- CHAINLINK FENCE
- TREES
- SHRUBERY
- CARWASH VACUUM STATION
- GUY ANCHOR
- MONITORING WELL
- EXISTING CONTOURS
- LIMIT OF REMEDIATION

- CATCH BASIN
- DRAIN MANHOLE
- SEWER MANHOLE
- TELEPHONE MANHOLE
- ELECTRIC MANHOLE
- LUMINAIRE
- PROPERTY LINE
- APPROX. EASEMENT BOUNDARY
- EDGE OF PAVEMENT
- EDGE OF GRAVEL
- S — SANITARY SEWER
- D — STORM SEWER
- W — WATER
- G — GAS
- OH — OVERHEAD LINES
- T — TELEPHONE
- E — ELECTRIC
- GUARDRAIL
- RETAINING WALL
- ROCK/BOULDER
- POST
- WATER SHUTOFF VALVE
- GV — GATE VALVE OR GAS VALVE
- HYDRANT
- SIGNPOST
- PARKING BUMPER
- UTILITY POLE

- 1 / 02 19 — DETAIL NUMBER; SHEET WHERE DETAIL IS SHOWN; SHEET WHERE DETAIL IS REFERENCED
- A / 02 12 — SECTION IDENTIFIER; SHEET WHERE SECTION IS SHOWN; SHEET WHERE SECTION IS REFERENCED
- CELL BOUNDARY
- PRECAST CONCRETE WALL PANELS
- STAGING AREA
- 975 — FINAL GRADE CONTOURS
- PRECAST CONCRETE WALL PANELS
- 2:1 MAX — RESTORED BANK SLOPE ABOVE WALL PANEL
- ℄ RIVER
- FLOW DIRECTION
- 22 O 2' — CONTROL ANGLE POINT FOR CENTERLINE OF STRUCTURAL STEEL H–PILE (HP) WITH DEFLECTION ANGLE NOTED
- BH000576 — BORING WITH NUMBER
- SHEET PILE
- GRAVEL
- + 967.0 — FINAL GRADE SPOT ELEV.
- 2 — COORDINATE POINT AND REFERENCE NUMBER

## GENERAL NOTES:

1. EXISTING SURVEYS PROVIDED BY: APPLEWOOD SURVEY CO., 21 GREEN ST., HOLLISTON MA 01746, TERRENCE M. RYAN R.L.S. 37057; COL–EAST, INC., HARRIMAN & WEST AIRPORT, P.O. BOX 347, NORTH ADAMS MA 01247; HILL ENGINEERS, ARCHITECTS, PLANNERS, INC., 50 DEPOT ST., DALTON MA 01226.
2. TOPOGRAPHIC FIELD SURVEY AND PLANS WERE PREPARED IN ACCORDANCE WITH THE PROCEDURAL AND TECHNICAL STANDARDS FOR THE PRACTICE OF LAND SURVEYING IN THE COMMONWEALTH OF MASSACHUSETTS BETWEEN SEPTEMBER 19, 2000 AND DECEMBER 1, 2000.
3. HORIZONTAL DATUM BASED ON MASSACHUSETTS STATE PLANE COORDINATES NAD 1983.
4. VERTICAL DATUM BASED ON NAVD 1988.
5. "EXCAVATION SUBCONTRACTOR" SHALL BE RESPONSIBLE FOR LOCATING ALL UTILITIES PRIOR TO EXCAVATING, TRENCHING, OR GRADING.
6. "EXCAVATION SUBCONTRACTOR" SHALL VERIFY AND COORDINATE THE DIMENSIONS AMONG ALL DRAWINGS PRIOR TO PROCEEDING WITH ANY WORK.
7. DISCREPANCIES IDENTIFIED BY THE "EXCAVATION SUBCONTRACTOR" BETWEEN THE SPECIFICATIONS, DRAWINGS, AND SITE CONDITIONS SHALL BE REPORTED TO THE GENERAL CONTRACTOR. WORK PERFORMED BY THE "EXCAVATION SUBCONTRACTOR" PRIOR TO RESOLUTION OF SUCH DISCREPANCY BY THE GENERAL CONTRACTOR SHALL BE DONE AT THE "EXCAVATION SUBCONTRACTOR'S" RISK.
8. THE "EXCAVATION SUBCONTRACTOR" IS RESPONSIBLE FOR INFORMATION CONTAINED IN THE FOLLOWING REFERENCES:

8.1 DRAFT BASIS OF DESIGN FOR PHASE 2 OF THE 1.5–MILE REMOVAL ACTION, DCN GE–121902–ABJE, DECEMBER–2002.

8.2 PRE–DESIGN SUMMARY, 1.5 MILE REMOVAL ACTION PHASE 2, DCN: GE–050202–AAZL, JULY, 2002.

8.3 PRE–DESIGN GEOTECHNICAL DATA SUMMARY FOR HOUSATONIC RIVER PROJECT FROM LYMAN STREET BRIDGE TO ELM STREET BRIDGE, PREPARED BY HART CROWSER, INC., DATED 9/25/2000.

8.4 SUMMARY OF STRUCTURAL CONDITIONS AND UTILITY SURVEY FROM LYMAN ST. BRIDGE TO ELM ST. BRIDGE ALONG HOUSATONIC RIVER, PITTSFIELD, MASSACHUSETTS, PREPARED BY HART CROWSER, INC., DATED 9/28/2000.

9. LIMITS OF REMEDIATION ARE BASED ON:

9.1 EAST (LEFT BANK) – TOP OF BANK, STATION 514+00 TO APPROXIMATELY STATION 518+00; AND ELEVATION 980, STATION 518+00 TO ELM ST.
WEST (RIGHT BANK) – ELEVATION 980

9.2 NORMAL WATER FLOW ELEVATION OF 971 FEET AS INDICATED IN THE JULY 14, 2000, VERSION OF THE EE/CA DOCUMENT. ELEVATION OF 971 IS USED TO DISTINGUISH BETWEEN RIVER SEDIMENTS AND BANK SOILS.

9.3 LIMITS OF IN–RIVER EXCAVATION ARE BASED ON TSCA/NON–TSCA DESIGNATIONS. LIMITS OF IN–RIVER EXCAVATION SHOWN HEREIN ARE FOR IN–RIVER CONSTRUCTION CONTRACT AND DO NOT INCLUDE UPLAND WORK BY THE GENERAL CONTRACTOR.

## DRAWING SCHEDULE

| SHEET | SHEET REFERENCE NUMBER | TITLE | SHEET | SHEET REFERENCE NUMBER | TITLE |
|---|---|---|---|---|---|
| 1 | 1000 | GENERAL NOTES AND LEGEND | 16 | 2102 | REVEGETATION RESTORATION |
| 2 | 1001 | PLAN OF EXISTING CONDITIONS | 17 | 2103 | REVEGETATION RESTORATION DETAILS |
| 3 | 1002 | REMOVAL AREAS | | | |
| 4 | 1003 | ACCESS ROADS AND STAGING AREAS | | | |
| 5 | 1004 | MISCELLANEOUS CIVIL DETAILS | | | |
| 6 | 2000 | TRANSITION AREA DAM & RETAINING WALL LAYOUT | | | |
| 7 | 2001 | TRANSITION AREA RETAINING WALL SECTIONS AND ARMOR DETAILS | | | |
| 8 | 2002 | DIVERSION DAM SITE PLAN | | | |
| 9 | 2003 | DIVERSION DAM ELEVATION | | | |
| 10 | 2004 | DIVERSION DAM DETAILS | | | |
| 11 | 2005 | DIVERSION DAM WALKWAY PLAN & DETAILS SHEET 1 OF 2 | | | |
| 12 | 2006 | DIVERSION DAM WALKWAY PLAN & DETAILS SHEET 2 OF 2 | | | |
| 13 | 2007 | EXISTING AND PROPOSED RIVERBANK CROSS–SECTIONS SHEET 1 OF 2 | | | |
| 14 | 2008 | EXISTING AND PROPOSED RIVERBANK CROSS–SECTIONS SHEET 2 OF 2 | | | |
| 15 | 2101 | RIVERBED AND RIVERBANK RESTORATION | | | |

FINAL DESIGN SUBMITTAL

US Army Corps of Engineers
New England District

| Symbol | Description | Date | Appr. | Symbol | Description | Date | Appr. |
|---|---|---|---|---|---|---|---|
| B | ISSUED FOR FINAL DESIGN | 4/14/03 | | | | | |
| A | ISSUED FOR DRAFT DESIGN | 02/28/03 | | | | | |

Designed by:
Dwn by: BEG
Ckd by:
Reviewed by:
Submitted by:
Chief, Arch. Section
Date:
Rev. B
Design file no:
SPEC. No.:
File name: SHEET-1000
Plot date: 4-14-03
Plot scale: AS SHOWN

DEPARTMENT OF THE ARMY
CORPS OF ENGINEERS
CONCORD, MASSACHUSETTS

WESTON SOLUTIONS
INGERSOLL-RAND ENVIRONMENTAL

1.5 MILE REMOVAL ACTION – PHASE 1/2 TRANSITION
ENVIRONMENTAL REMEDIATION CONTRACT (SSERC)
GE/HOUSATONIC RIVER SITE
PITTSFIELD, MASSACHUSETTS

GENERAL NOTES AND LEGEND

Sheet reference number:
1000
1 OF 17

M:\Design\UNPO\ACOE\SSERC\Proj_0.5m\TRANSITION DESIGN DRAWINGS\SHEET-1000.dwg, Layout1, 04/14/2003 10:50:29 AM, gmorden, 1:1

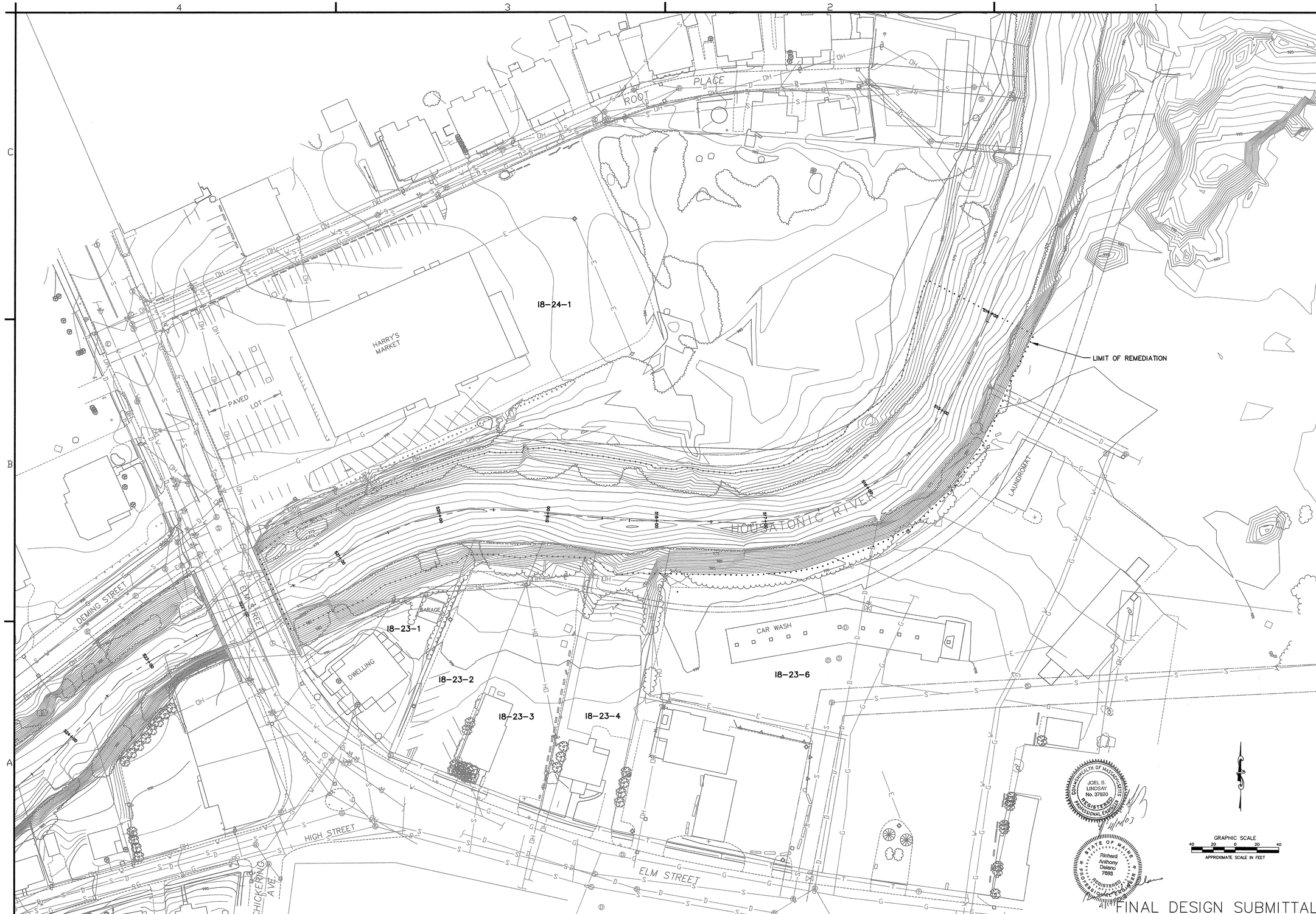


FINAL DESIGN SUBMITTAL

US Army Corps of Engineers
New England District

| Symbol | Description | Date | Appr |
|---|---|---|---|
| B | ISSUED FOR FINAL DESIGN | 4/14/03 | |
| A | ISSUED FOR DRAFT DESIGN | 12/28/02 | |

Designed by:
Dwn by: BEG
Ckd by:
Reviewed by:
Submitted by:
Chief, Arch. Section
Date:
Rev. B
Design file no:
SPEC. No.:
File name: SHEET-1001
Plot date: 4-14-03
Plot scale: AS SHOWN

DEPARTMENT OF THE ARMY
CORPS OF ENGINEERS
CONCORD, MASSACHUSETTS

WESTON SOLUTIONS
WOODLOT ALTERNATIVES, INC.

1.5 MILE REMOVAL ACTION – PHASE 1/2 TRANSITION
ENVIRONMENTAL REMEDIATION CONTRACT (SSERC)
GE/HOUSATONIC RIVER SITE
PITTSFIELD, MASSACHUSETTS

PLAN OF EXISTING CONDITIONS

Sheet reference number:
1001
2 OF 17

| EXCAVATION CONTROL POINTS | | |
|---|---|---|
| EX-1 2992346.12 186112.38 | EX-34 2992152.94 185886.50 | EX-60 2992167.43 185785.22 |
| EX-2 2992332.56 186138.68 | EX-35 2992149.88 185933.74 | EX-61 2992171.90 185731.39 |
| EX-3 2992277.07 186110.08 | EX-36 2992149.14 185935.15 | EX-62 2992163.29 185680.00 |
| EX-4 2992284.53 186101.31 | EX-37 2992151.66 185965.81 | EX-63 2992172.85 185678.65 |
| EX-5 2992288.48 186091.94 | EX-38 2992220.40 186044.10 | EX-64 2992183.46 185730.96 |
| EX-6 2992303.16 186195.73 | EX-39 2992214.69 186049.55 | EX-65 2992179.83 185784.30 |
| EX-7 2992298.45 186204.53 | EX-40 2992204.43 186059.28 | EX-66 2992176.19 185837.65 |
| EX-8 2992264.95 186187.50 | EX-41 2992210.70 186031.82 | EX-67 2992103.58 185653.91 |
| EX-9 2992234.57 186174.86 | EX-42 2992207.63 186030.12 | EX-68 2992085.62 185659.52 |
| EX-10 2992239.13 186163.91 | EX-43 2992200.03 186018.31 | EX-69 2992083.38 185651.32 |
| EX-11 2992213.34 186072.10 | EX-44 2992194.41 186011.19 | EX-70 2992079.54 185640.45 |
| EX-12 2992172.93 186113.75 | EX-45 2992185.92 186016.20 | EX-71 2992076.87 185633.57 |
| EX-13 2992153.52 186096.87 | EX-46 2992173.98 186021.78 | EX-72 2992072.14 185620.12 |
| EX-14 2992141.32 186078.85 | EX-47 2992187.65 185991.07 | EX-73 2992088.94 185613.62 |
| EX-15 2992186.18 186043.39 | EX-48 2992180.60 185980.84 | EX-74 2992097.31 185633.63 |
| EX-16 2992201.12 186060.76 | EX-49 2992178.63 185974.95 | EX-75 2992101.39 185644.62 |
| EX-18 2992149.71 186100.70 | EX-50 2992174.13 185976.94 | EX-76 2992100.12 185640.33 |
| EX-19 2992121.82 186053.81 | EX-51 2992158.94 185978.08 | EX-77 2992106.17 185988.61 |
| EX-20 2992101.65 185994.46 | EX-52 2992165.04 185977.62 | |
| EX-21 2992105.79 185993.64 | EX-53 2992162.34 185937.67 | |
| EX-22 2992125.18 186051.17 | EX-54 2992164.90 185887.95 | |
| EX-23 2992089.57 186001.69 | EX-55 2992172.67 185886.79 | |
| EX-24 2992084.00 186003.15 | EX-56 2992169.14 185935.94 | |
| EX-25 2992080.21 185981.96 | EX-57 2992156.81 185886.80 | |
| EX-26 2992077.40 185944.20 | EX-58 2992162.96 185839.04 | |
| EX-27 2992078.46 185890.10 | EX-59 2992171.28 185785.32 | |
| EX-28 2992080.45 185890.09 | | |
| EX-29 2992081.13 185940.68 | | |
| EX-30 2992155.51 185979.10 | | |
| EX-31 2992107.72 185993.26 | | |
| EX-32 2992101.83 185939.19 | | |
| EX-33 2992103.69 185882.75 | | |

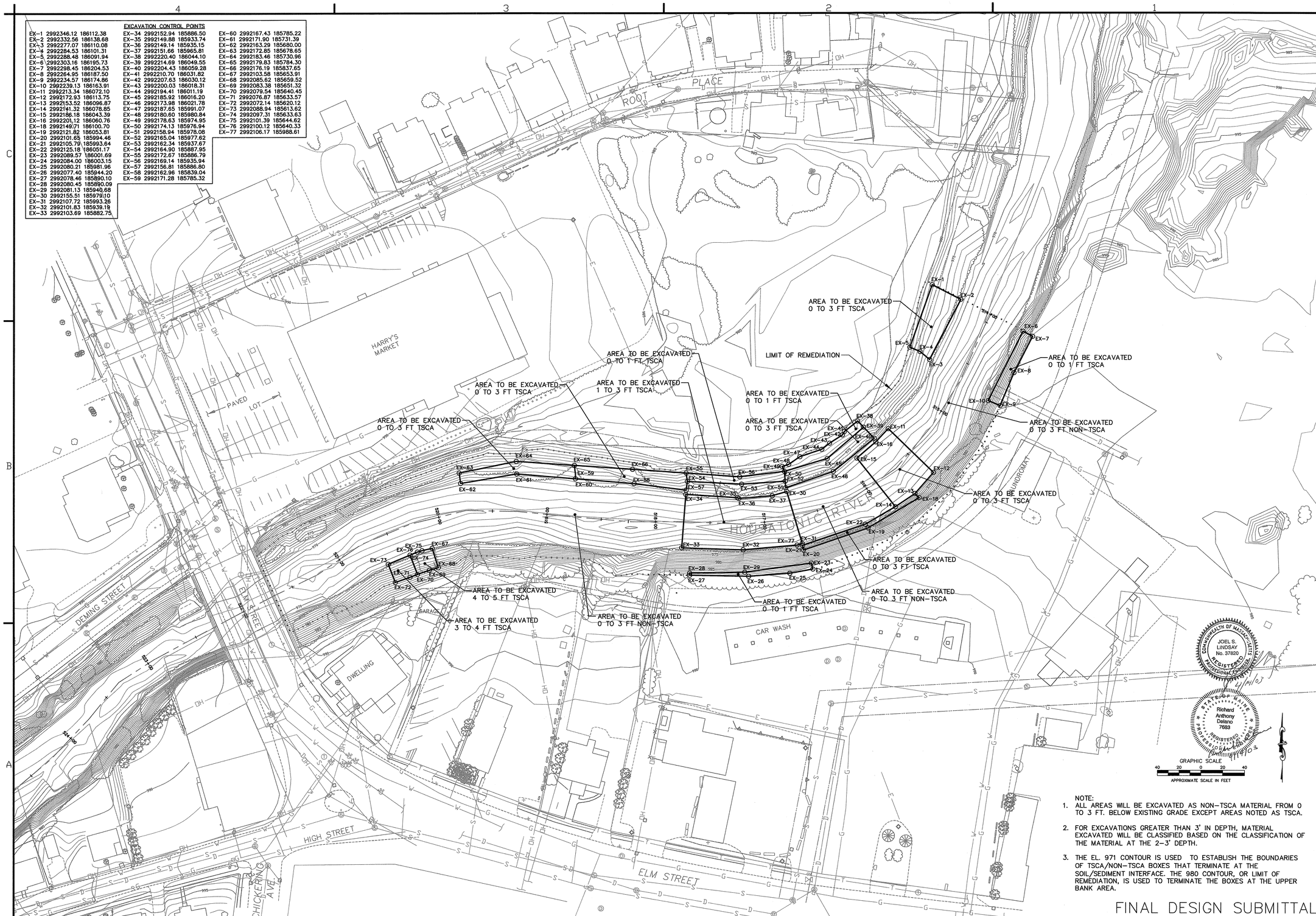


NOTE:
1. ALL AREAS WILL BE EXCAVATED AS NON-TSCA MATERIAL FROM 0 TO 3 FT. BELOW EXISTING GRADE EXCEPT AREAS NOTED AS TSCA.
2. FOR EXCAVATIONS GREATER THAN 3' IN DEPTH, MATERIAL EXCAVATED WILL BE CLASSIFIED BASED ON THE CLASSIFICATION OF THE MATERIAL AT THE 2-3' DEPTH.
3. THE EL. 971 CONTOUR IS USED TO ESTABLISH THE BOUNDARIES OF TSCA/NON-TSCA BOXES THAT TERMINATE AT THE SOIL/SEDIMENT INTERFACE. THE 980 CONTOUR, OR LIMIT OF REMEDIATION, IS USED TO TERMINATE THE BOXES AT THE UPPER BANK AREA.

FINAL DESIGN SUBMITTAL

US Army Corps of Engineers
New England District

| Symbol | Description | Date | Appr. |
|---|---|---|---|
| B | ISSUED FOR FINAL DESIGN | 4/14/03 | |
| A | ISSUED FOR DRAFT DESIGN | 12/20/02 | |

Designed by: Date: Rev. B
Dwn by: BEG Ckd by: Design file no:
Reviewed by: SPEC. No.:
Submitted by: Chief, Arch. Section
File name: SHEET-1002
Plot date: 4-14-2003
Plot scale: AS SHOWN

DEPARTMENT OF THE ARMY
CORPS OF ENGINEERS
CONCORD, MASSACHUSETTS

WESTON SOLUTIONS
WOODLOT ENVIRONMENTAL

1.5 MILE REMOVAL ACTION – PHASE 1/2 TRANSITION
ENVIRONMENTAL REMEDIATION CONTRACT (SSERC)
GE/HOUSATONIC RIVER SITE
PITTSFIELD, MASSACHUSETTS

REMOVAL AREAS

Sheet reference number:
1002
3 OF 17

COMMONWEALTH OF MASSACHUSETTS
JOEL S. LINDSAY
No. 37820
REGISTERED PROFESSIONAL ENGINEER
4/14/03

STATE OF MAINE
Richard Anthony Delano
7683
REGISTERED PROFESSIONAL ENGINEER
4/14/03

W:\Design\DWG\ACOE\SSERC\Ind_0.5m\TRANSITION DESIGN DRAWINGS\SHEET-1002.dwg, layout1, 04/14/2003 11:05:05 AM, gbarnes, 1:1

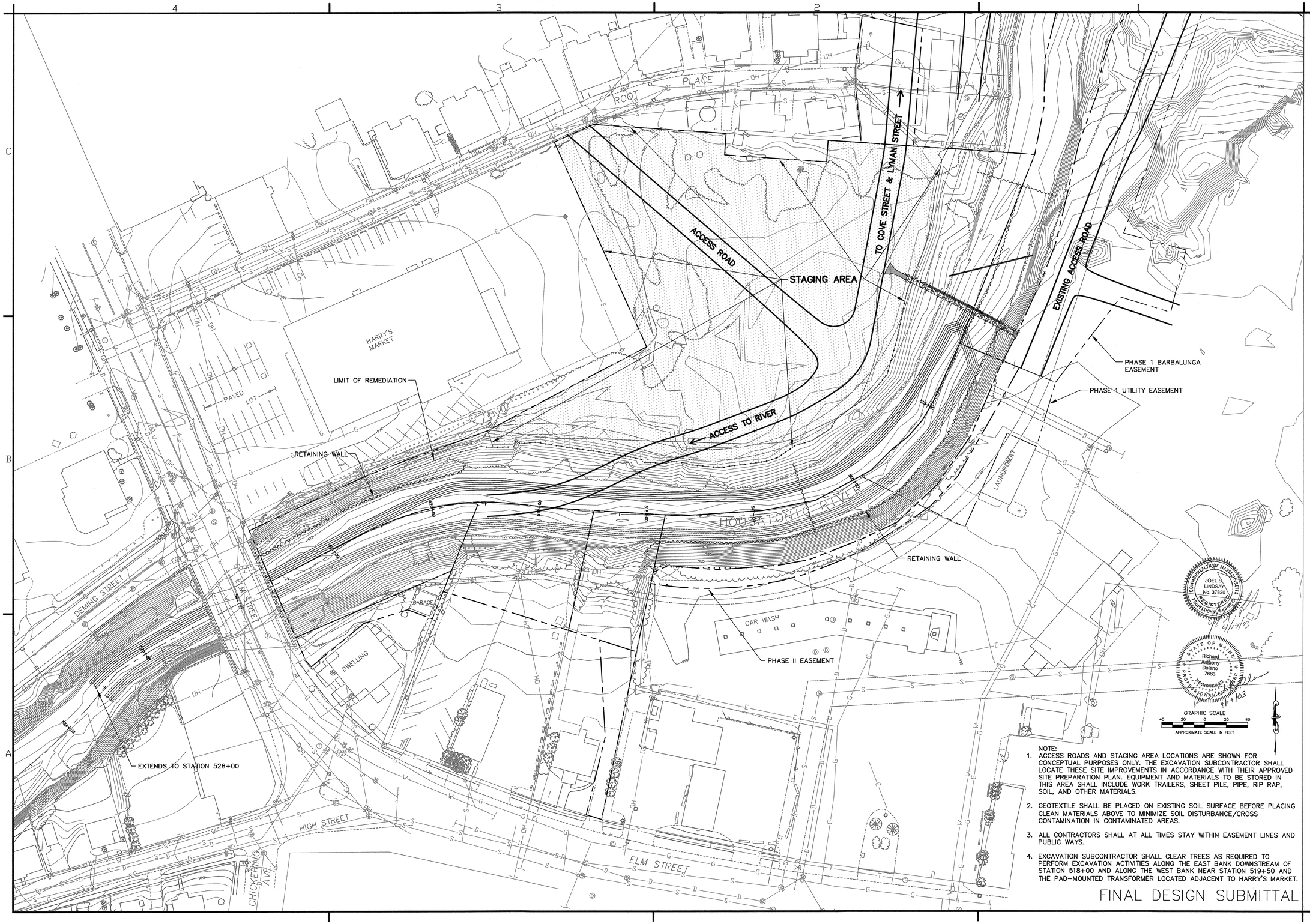


NOTE:

1. ACCESS ROADS AND STAGING AREA LOCATIONS ARE SHOWN FOR CONCEPTUAL PURPOSES ONLY. THE EXCAVATION SUBCONTRACTOR SHALL LOCATE THESE SITE IMPROVEMENTS IN ACCORDANCE WITH THEIR APPROVED SITE PREPARATION PLAN. EQUIPMENT AND MATERIALS TO BE STORED IN THIS AREA SHALL INCLUDE WORK TRAILERS, SHEET PILE, PIPE, RIP RAP, SOIL, AND OTHER MATERIALS.
2. GEOTEXTILE SHALL BE PLACED ON EXISTING SOIL SURFACE BEFORE PLACING CLEAN MATERIALS ABOVE TO MINIMIZE SOIL DISTURBANCE/CROSS CONTAMINATION IN CONTAMINATED AREAS.
3. ALL CONTRACTORS SHALL AT ALL TIMES STAY WITHIN EASEMENT LINES AND PUBLIC WAYS.
4. EXCAVATION SUBCONTRACTOR SHALL CLEAR TREES AS REQUIRED TO PERFORM EXCAVATION ACTIVITIES ALONG THE EAST BANK DOWNSTREAM OF STATION 518+00 AND ALONG THE WEST BANK NEAR STATION 519+50 AND THE PAD-MOUNTED TRANSFORMER LOCATED ADJACENT TO HARRY'S MARKET.

FINAL DESIGN SUBMITTAL

US Army Corps of Engineers
New England District

| Symbol | Description | Date | Appr |
|---|---|---|---|
| B | ISSUED FOR FINAL DESIGN | 4/14/03 | |
| A | ISSUED FOR DRAFT DESIGN | 12/20/02 | |

Designed by:
Dwn by: BEG
Ckd by:
Reviewed by:
Submitted by:
Chief, Arch. Section
Date:
Design file no:
SPEC. No.:
File name: SHEET-1003
Plot date: 4-14-03
Plot scale: AS SHOWN
Rev. B

DEPARTMENT OF THE ARMY
CORPS OF ENGINEERS
CONCORD, MASSACHUSETTS

WESTON SOLUTIONS
WOODLOT ALTERNATIVES, INC.

1.5 MILE REMOVAL ACTION – PHASE 1/2 TRANSITION
ENVIRONMENTAL REMEDIATION CONTRACT (SSERC)
GE/HOUSATONIC RIVER SITE
PITTSFIELD, MASSACHUSETTS

ACCESS ROADS AND STAGING AREAS

Sheet reference number:
1003
4 OF 17

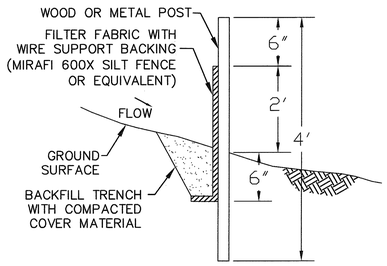


## DETAIL – SILT FENCE (TYP.) 1

NOT TO SCALE

NOTES:

1. WOOD OR METAL POSTS SHALL BE SPACED NO MORE THAN 10 FEET APART.
2. EXCAVATE TRENCH 6" DEEP TO BURY BASE OF FILTER FABRIC. BACKFILL TRENCH WITH COMPACTED NATIVE SOILS.

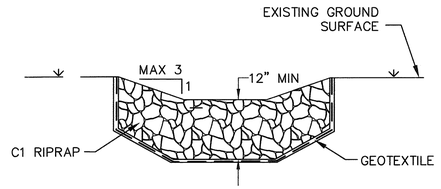


## STORMWATER DIVERSION SWALE (TYP.) 3

NOT TO SCALE

NOTES:

1. PROVIDE C1 RIPRAP AND GEOTEXTILE WHERE SWALE GRADE EXCEED 5%.
2. SWALES FLATTER THAN 5% GRADE SHALL BE LINED WITH APPROVED EROSION CONTROL MAT AND SEEDED WITH GRASS.

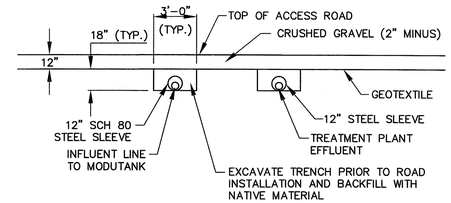


## ACCESS ROAD PIPELINE CROSSING DETAIL

NOT TO SCALE

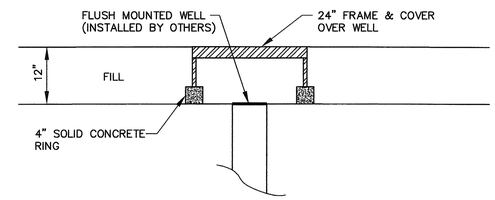


## TYPICAL WELL–HEAD PROTECTION DETAIL

NOT TO SCALE

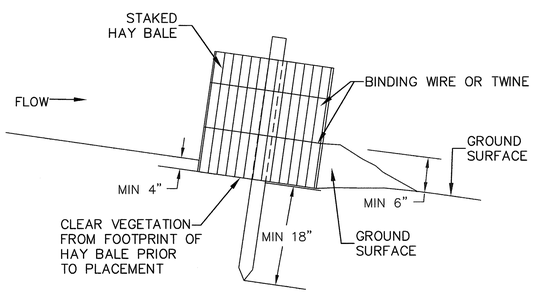


SECTION

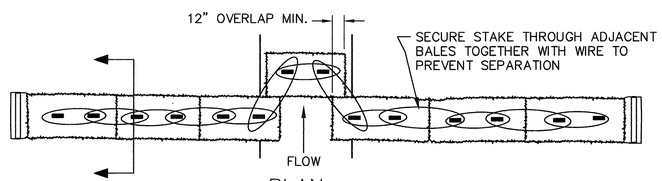


PLAN

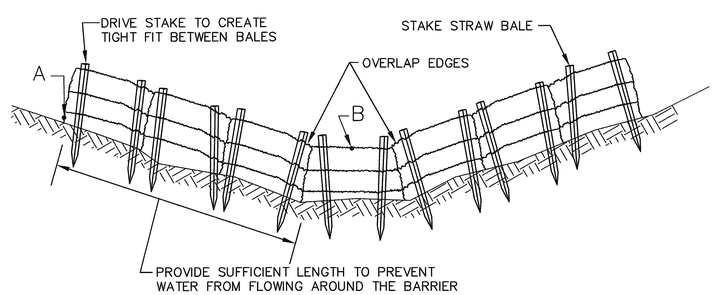


ELEVATION

(LOOKING DOWN STREAM)

NOTES:

1. PLACE SUFFICIENT BALES TO ESTABLISH ELEVATIONS AT "A" AT LEAST 6" ABOVE OVERFLOW AT "B".
2. LOCATE BARRIER AS SHOWN ON PLANS AND AT THESE INTERVALS:
3. 

| DITCH SLOPE | MAX. PLACEMENT INTERVAL ALONG SWALE |
|---|---|
| < 3% | 300' |
| > 3% | 150' |

## TEMPORARY HAY BALE BARRIER 2

NOT TO SCALE

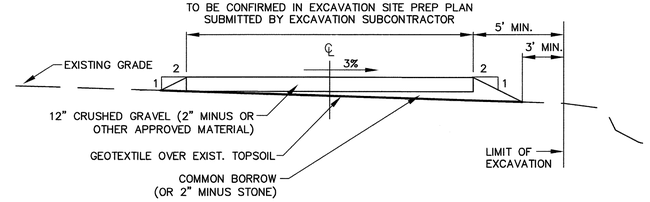


## TYPICAL ACCESS ROAD SECTION

NOT TO SCALE

NOTE:

TOTAL DEPTH OF ACCESS ROAD WILL VARY ACCORDING TO SITE CONDITIONS.

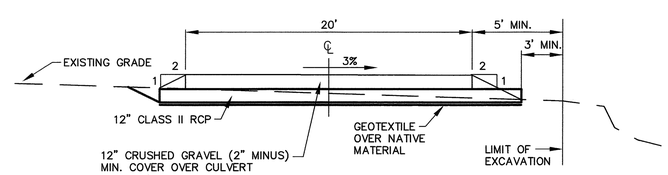


## CULVERT CROSSING DETAIL

NOT TO SCALE

NOTE:
CULVERT CROSSINGS SHALL BE LOCATED IN THE FIELD BY THE EXCAVATION CONTRACTOR.

COMMONWEALTH OF MASSACHUSETTS — JOEL S. LINDSAY No. 37820 — REGISTERED PROFESSIONAL ENGINEER — 4/14/03

STATE OF MAINE — Richard Anthony Delano 7883 — REGISTERED PROFESSIONAL ENGINEER — 4/14/03

FINAL DESIGN SUBMITTAL

US Army Corps of Engineers
New England District

| Symbol | Description | Date | Appr | Symbol | Description | Date | Appr |
|---|---|---|---|---|---|---|---|
| A | ISSUED FOR DRAFT DESIGN | 10/20/02 | | | | | |
| B | ISSUED FOR FINAL DESIGN | 4/14/03 | | | | | |

Designed by:
Dwn by: BEG
Ckd by:
Reviewed by:
Submitted by:
Chief, Arch. Section
Date:
Rev. B
Design file no:
SPEC. No.:
File name: SHEET-1004
Plot date: 4-14-03
Plot scale: AS SHOWN

DEPARTMENT OF THE ARMY
CORPS OF ENGINEERS
CONCORD, MASSACHUSETTS

WESTON SOLUTIONS — WOODLOT ALTERNATIVES, INC.

1.5 MILE REMOVAL ACTION – PHASE 1/2 TRANSITION
ENVIRONMENTAL REMEDIATION CONTRACT (SSERC)
GE/HOUSATONIC RIVER SITE
PITTSFIELD, MASSACHUSETTS

MISCELLANEOUS CIVIL DETAILS

Sheet reference number:
1004
5 OF 17

W:\Design\ARMY\AEDC\SSERC\2no_2.5m\TRANSITION DESIGN DRAWINGS\SHEET-1004.dwg, Layout1, 04/14/2003 11:37:28 AM, gnowak, 1:1

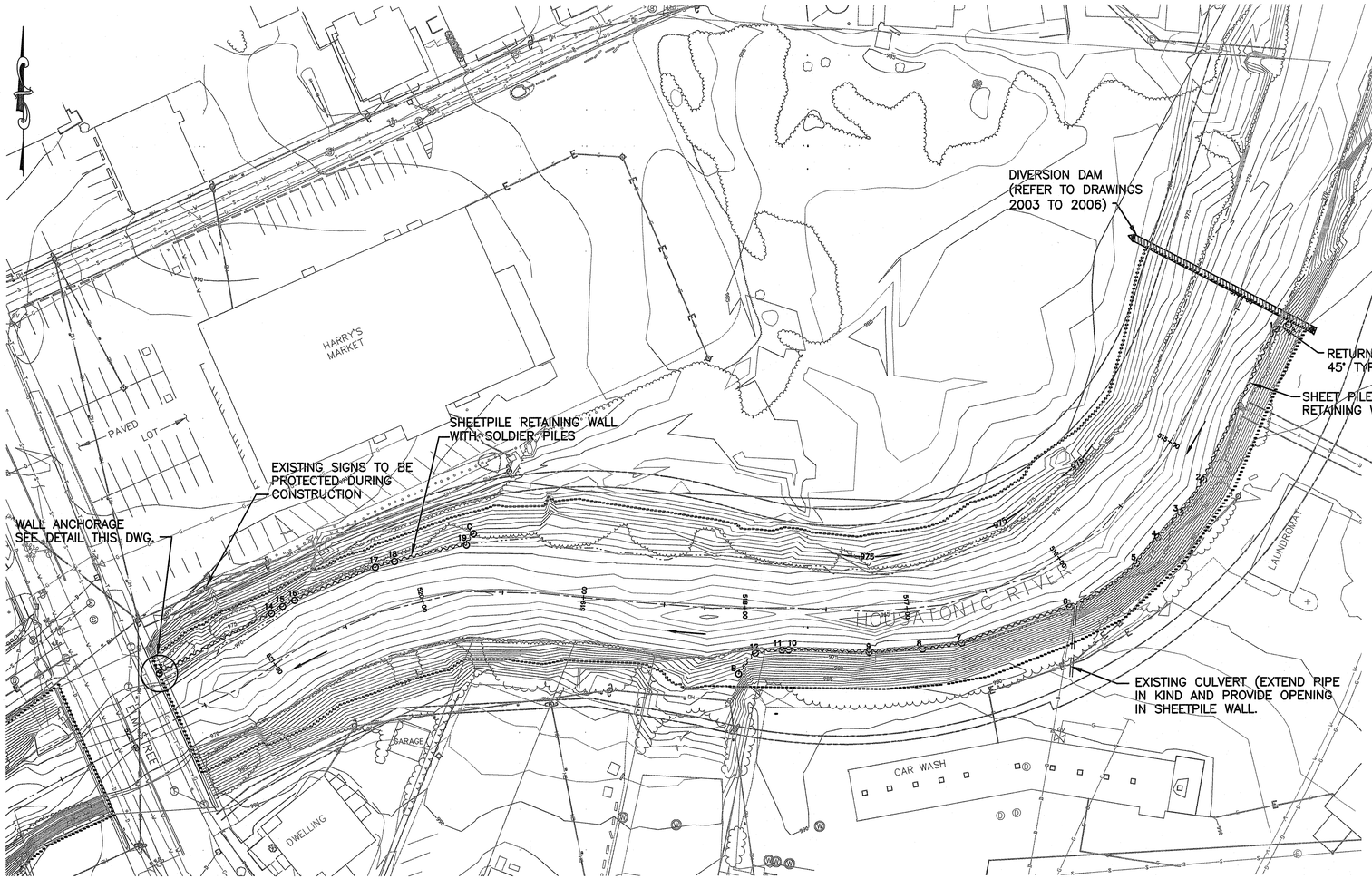


TABLE 1 RETAINING WALL CONTROL POINTS

| | COORDINATES NORTH | COORDINATES EAST | APPROXIMATE DISTANCE BETWEEN CONTROL PTS. | DESCRIPTION | ESTIMATED NO. OF SECTIONS |
|---|---|---|---|---|---|
| A | 2992301.77 | 186194.11 | | | |
| | | | 8.3' | STRAIGHT | 4 |
| 1 | 2992299.03 | 186186.31 | | | |
| | | | 103.3' | STRAIGHT | 50 |
| 2 | 2992205.91 | 186141.53 | | | |
| | | | 24.5' | CURVE | 12 |
| 3 | 2992185.97 | 186127.36 | | | |
| | | | 20.7' | STRAIGHT | 10 |
| 4 | 2992170.74 | 186113.40 | | | |
| | | | 20.7' | STRAIGHT | 10 |
| 5 | 2992154.83 | 186100.21 | | | |
| | | | 49.7' | CURVE | 24 |
| 6 | 2992128.00 | 186059.15 | | | |
| | | | 70.3' | STRAIGHT | 34 |
| 7 | 2992105.83 | 185992.47 | | | |
| | | | 24.5' | CURVE | 12 |
| 8 | 2992102.09 | 185968.31 | | | |
| | | | 33.1' | STRAIGHT | 16 |
| 9 | 2992100.26 | 185935.30 | | | |
| | | | 49.6' | STRAIGHT | 24 |
| 10 | 2992101.83 | 185885.72 | | | |
| | | | 4.1' | STRAIGHT | 2 |
| 11 | 2992101.60 | 185881.60 | | | |
| | | | 16.5' | STRAIGHT | 8 |
| 12 | 2992099.79 | 185865.17 | | | |
| | | | 16.5' | STRAIGHT | 8 |
| B | 2992086.88 | 185854.83 | | | |
| 13 | 2992087.66 | 185497.38 | | | |
| | | | 78.5' | STRAIGHT | 38 |
| 14 | 2992124.87 | 185566.54 | | | |
| | | | 8.3' | STRAIGHT | 4 |
| 15 | 2992129.26 | 185573.54 | | | |
| | | | 8.3' | STRAIGHT | 4 |
| 16 | 2992132.98 | 185580.93 | | | |
| | | | 53.7' | STRAIGHT | 26 |
| 17 | 2992153.29 | 185630.68 | | | |
| | | | 12.4' | STRAIGHT | 6 |
| 18 | 2992156.86 | 185642.55 | | | |
| | | | 45.5' | STRAIGHT | 22 |
| 19 | 2992166.86 | 185686.90 | | | |
| | | | 8.3' | STRAIGHT | 4 |
| C | 2992173.85 | 185691.32 | | | |

ESTIMATED NO. OF SECTIONS BASED ON SKYLINE STEEL AZ-26
SINGLE PILE LENGTH

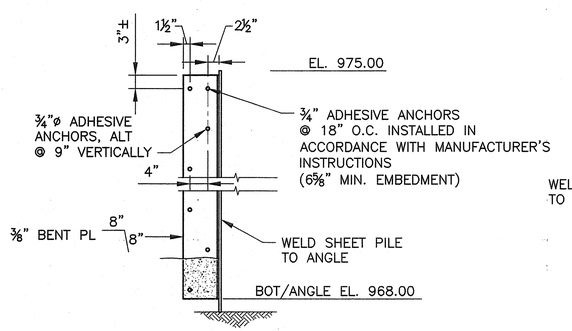


CONNECTION SUBJECT TO APPROVAL OF CITY OF PITTSFIELD AND/OR MASSACHUSETTS HIGHWAY DEPARTMENT. WALE CONNECTION ALSO SUBJECT TO APPROVAL

SECTION A
3/4"=1'-0"

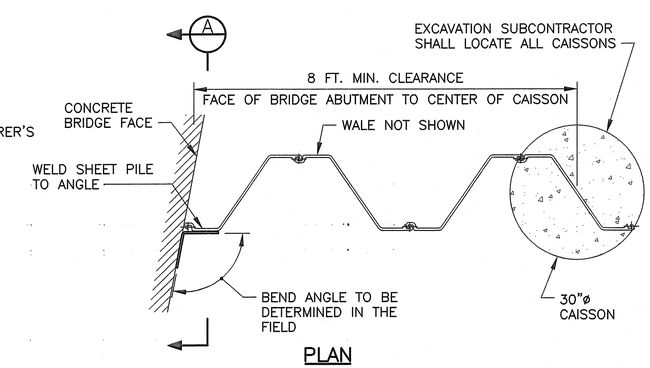


PLAN
WALL ANCHORAGE AT ELM ST. BRIDGE FACE
¾"=1'-0"
(WEST BANK RETAINING WALL)

STATE OF MAINE
Richard Anthony Delano
7663
REGISTERED PROFESSIONAL ENGINEER
4/15/03

COMMONWEALTH OF MASSACHUSETTS
REGISTERED PROFESSIONAL
WILLIAM A. ZAHN
ENGINEER
27113
4/14/03

40 0 40 80 FEET
SCALE 1"=40'

FINAL DESIGN SUBMITTAL

US Army Corps of Engineers
New England District

| Symbol | Description | Date | Appr. | Symbol | Description | Date | Appr. |
|---|---|---|---|---|---|---|---|
| B | ISSUED FOR FINAL DESIGN | 4/14/03 | | | | | |
| A | ISSUED FOR DRAFT DESIGN | 12/19/02 | | | | | |

Designed by: W.HOFFMAN/A.HARPUR
Dwn by: E.DIFATTA
Ckd by: W.ZAHN
Reviewed by: W.ZAHN
Submitted by:
Chief, Arch. Section
Date: DEC. 2002
Design file no:
SPEC. No.:
File name:
Plot date:
Plot scale:
Rev.

DEPARTMENT OF THE ARMY
CORPS OF ENGINEERS
CONCORD, MASSACHUSETTS

WESTON SOLUTIONS
WOODLOT ENVIRONMENTAL

1.5 MILE REMOVAL ACTION - PHASE 1/2 TRANSITION
ENVIRONMENTAL REMEDIATION CONTRACT (SSERC)
GE/HOUSATONIC RIVER SITE
PITTSFIELD, MASSACHUSETTS
TRANSITION AREA
DAM & RETAINING WALL LAYOUT

Sheet reference number:
2000
6 OF 17

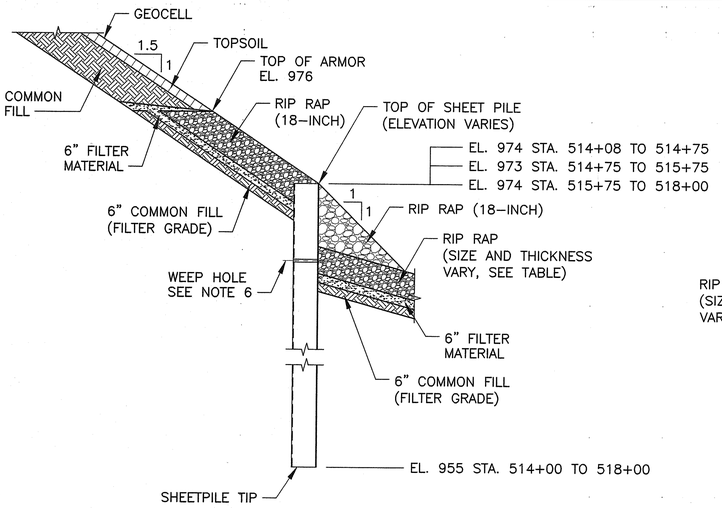


## TYPICAL CROSS SECTION EAST BANK STA. 514+00 TO 518+00

N.T.S.

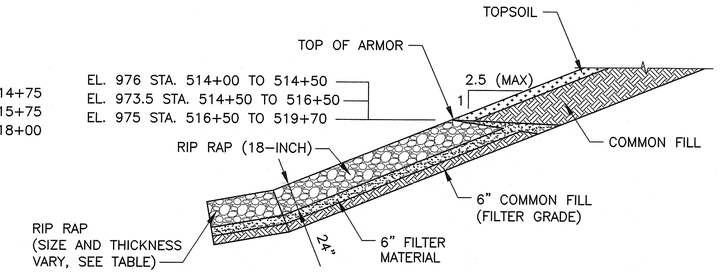


## TYPICAL CROSS SECTION WEST BANK STA. 514+00 TO 519+70

N.T.S.

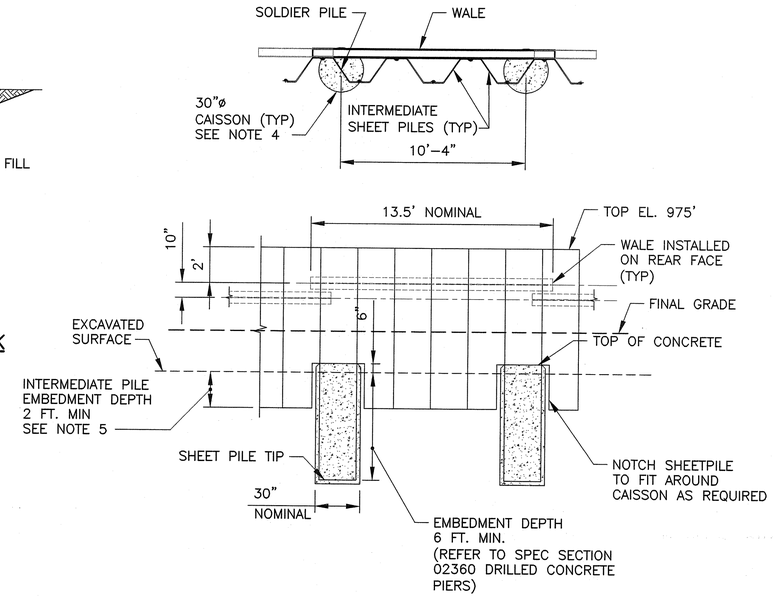


## PLAN AND ELEVATION VIEWS OF WEST BANK RETAINING WALL

N.T.S.

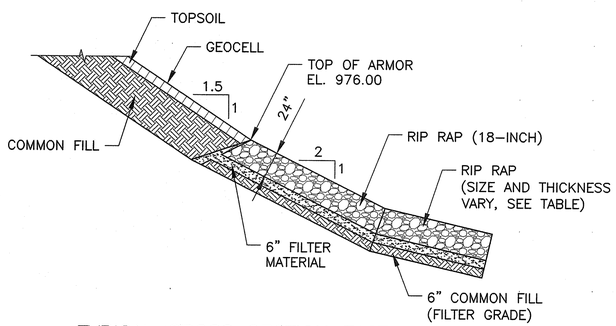


## TYPICAL CROSS SECTION EAST BANK STA. 518+00 TO 521+65

N.T.S.

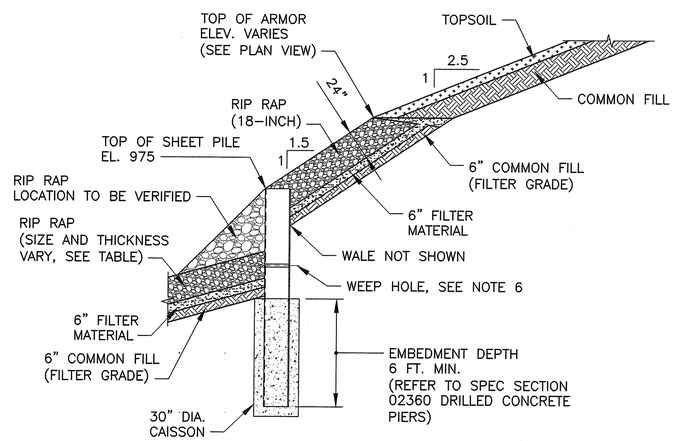


## TYPICAL CROSS SECTION WEST BANK STA. 519+70 TO 521+68

N.T.S.

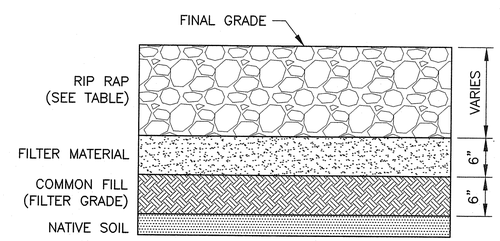


## TYPICAL RIVERBED BACKFILL SEQUENCE

N.T.S.

SUMMARY OF BACKFILL REQUIREMENTS FOR RIVERBED

| STATION | RIP RAP SIZE | RIP RAP THICKNESS | UNDERFILL THICKNESS |
|---|---|---|---|
| 514+00 TO 514+50 | 12" | 20" | 4" |
| 514+50 TO 519+00 | 9" | 15" | 9" |
| 519+00 TO 519+70 | 12" | 20" | 4" |
| 519+70 TO 521+68 (ELM ST. BRIDGE) | 18" | 24" | 0 |

NOTE: "UNDERFILL THICKNESS" REPRESENTS THE DIFFERENCE BETWEEN THE EXCAVATION DEPTH AND THE BACKFILL DEPTH. UNDERFILLS ONLY OCCUR WITHIN THE RIVERBED AREA.

NOTES:

1. FINAL GRADES ARE HORIZONTAL TO VERTICAL (H:V).
2. SEE SPECIFICATION 02300 FOR RIP RAP AND FILTER LAYER MATERIAL REQUIREMENTS.
3. EXCAVATION SUBCONTRACTOR MAY PROPOSE ALTERNATE RETAINING WALL FOR WEST BANK RESTORATION.
4. EXCAVATION SUBCONTRACTOR SHALL LOCATE CAISSONS. NO CAISSON SHALL BE INSTALLED WITHIN 8 FEET OF THE UPSTREAM FACE OF THE ELM STREET BRIDGE IN ORDER TO AVOID POTENTIAL CONFLICT WITH BRIDGE ABUTMENT FOUNDATION.
5. IF EMBEDMENT CANNOT BE ACHIEVED PROVIDE CAST–IN–PLACE, REINFORCED CONCRETE TOE BLOCK ANCHORED TO RIVERBED ALONG FRONT FACE OR SECOND WALE ALONG BACK FACE.
6. PROVIDE 2–INCH DIAMETER WEEP HOLES AT 10 FT ON CENTER. WEEP HOLE INVERT SHOULD BE SET AT CENTER OF RIP RAP LAYER. PROVIDE GEOTEXTILE WRAPPED GRAVEL (FILTER MATERIAL) PACK BEHIND WALL, APPROX. 2' x 2' x 2'.

STATE OF MAINE — Richard Anthony Delano 7688 — REGISTERED PROFESSIONAL ENGINEER — 4/15/03

COMMONWEALTH OF MASSACHUSETTS — REGISTERED PROFESSIONAL ENGINEER — WILLIAM A. ZAHN — ENGINEER — 27113-E — 4/14/03

4 0 4 8 FEET
VERTICAL SCALE 1"=4'
20 0 20 40 FEET
HORIZONTAL SCALE 1"=20'

FINAL DESIGN SUBMITTAL

US Army Corps of Engineers New England District

| Symbol | Description | Date | Appr. |
|---|---|---|---|
| B | ISSUED FOR FINAL DESIGN | 4/14/03 | |
| A | ISSUED FOR DRAFT DESIGN | 12/19/02 | |

| Symbol | Description | Date | Appr. |
|---|---|---|---|

Designed by: W.HOFFMAN/A.HARPUR
Dwn by: E.DIFATTA
Ckd by: W.ZAHN
Reviewed by: W.ZAHN
Submitted by: Chief, Arch. Section
Date: DEC. 2002
Design file no:
SPEC. No.:
File name:
Plot date:
Plot scale:
Rev.

DEPARTMENT OF THE ARMY
CORPS OF ENGINEERS
CONCORD, MASSACHUSETTS

WESTON SOLUTIONS — WOODLOT ENVIRONMENTAL

1.5 MILE REMOVAL ACTION – PHASE I/2 TRANSITION
ENVIRONMENTAL REMEDIATION CONTRACT (SSERC)
GE/HOUSATONIC RIVER SITE
PITTSFIELD, MASSACHUSETTS

TRANSITION AREA
RETAINING WALL SECTIONS
AND ARMOR DETAILS

Sheet reference number:
2001
7 OF 17

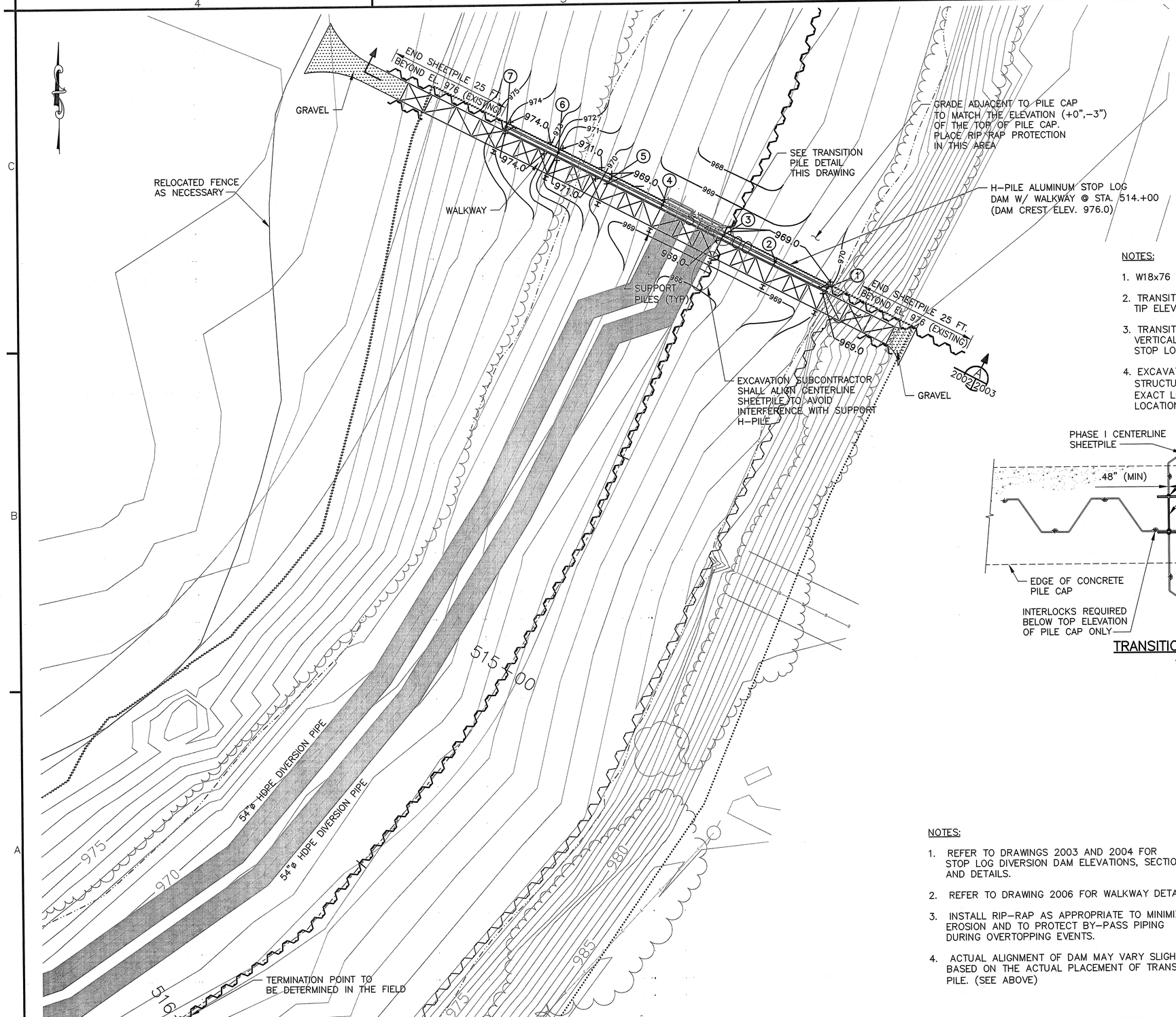


NOTES:

1. W18x76 TRANSITION PILE SHALL BE FULL DEPTH.
2. TRANSITION PILE SHALL BE DRIVEN TO A MINIMUM TIP ELEVATION OF 948. ±1FT.
3. TRANSITION PILE SHALL BE DRIVEN PLUMB AND VERTICAL TO ALLOW INSTALLATION AND REMOVAL OF STOP LOGS.
4. EXCAVATION SUBCONTRACTOR SHALL DETERMINE STRUCTURAL REQUIREMENTS (THICKNESS, WELD, EXACT LOCATION, BRACING) FOR INTERLOCKS. LOCATION MUST BE APPROVED BY ENGINEER.

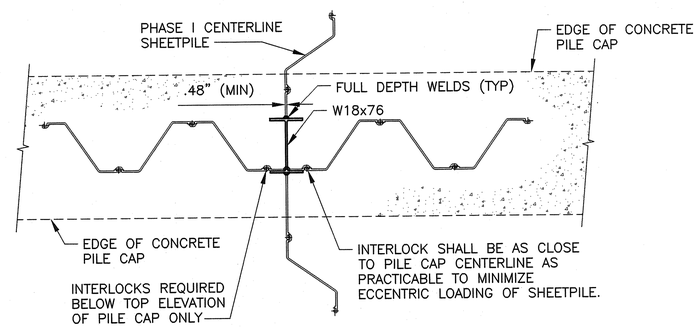


## TRANSITION PILE DETAIL

1"=2'-0"

**DIVERSION DAM H-PILE LOCATION TABLE**

| PT | N | E |
|---|---|---|
| 1 | 2992307.47 | 186187.36 |
| 2 | 2992312.97 | 186176.69 |
| 3 | 2992318.47 | 186166.02 |
| 4 | 2992324.89 | 186153.58 |
| 5 | 2992330.38 | 186142.91 |
| 6 | 2992335.88 | 186132.25 |
| 7 | 2992341.38 | 186121.58 |

SEE NOTE 4

NOTES:

1. REFER TO DRAWINGS 2003 AND 2004 FOR STOP LOG DIVERSION DAM ELEVATIONS, SECTIONS AND DETAILS.
2. REFER TO DRAWING 2006 FOR WALKWAY DETAILS.
3. INSTALL RIP-RAP AS APPROPRIATE TO MINIMIZE EROSION AND TO PROTECT BY-PASS PIPING DURING OVERTOPPING EVENTS.
4. ACTUAL ALIGNMENT OF DAM MAY VARY SLIGHTLY BASED ON THE ACTUAL PLACEMENT OF TRANSITION PILE. (SEE ABOVE)

COMMONWEALTH OF PENNSYLVANIA REGISTERED PROFESSIONAL WILLIAM A. ZAHN ENGINEER 27113-E
4/14/03

2 0 2 40 FEET
SCALE 1"=2'

10 0 10 20 FEET
SCALE 1"=10'

FINAL DESIGN SUBMITTAL

US Army Corps of Engineers
New England District

| Symbol | Description | Date | Appr |
|---|---|---|---|
| B | ISSUED FOR FINAL DESIGN | 4/14/03 | |
| A | ISSUED FOR DRAFT DESIGN | 12/9/02 | |

Designed by: W.HOFFMAN/A.HARPUR
Dwn by: E.DIFATTA
Ckd by: W.ZAHN
Reviewed by: W.ZAHN
Submitted by:
Chief, Arch. Section
Date: DEC. 2002
Rev.
Design file no:
SPEC. No.:
File name:
Plot date:
Plot scale:

DEPARTMENT OF THE ARMY
CORPS OF ENGINEERS
CONCORD, MASSACHUSETTS

WESTON SOLUTIONS
WOODLOT ENVIRONMENTAL

1.5 MILE REMOVAL ACTION - PHASE 1/2 TRANSITION
ENVIRONMENTAL REMEDIATION CONTRACT (SSERC)
GE/HOUSATONIC RIVER SITE
PITTSFIELD, MASSACHUSETTS

DIVERSION DAM
SITE PLAN

Sheet reference number:
2002
8 OF 17

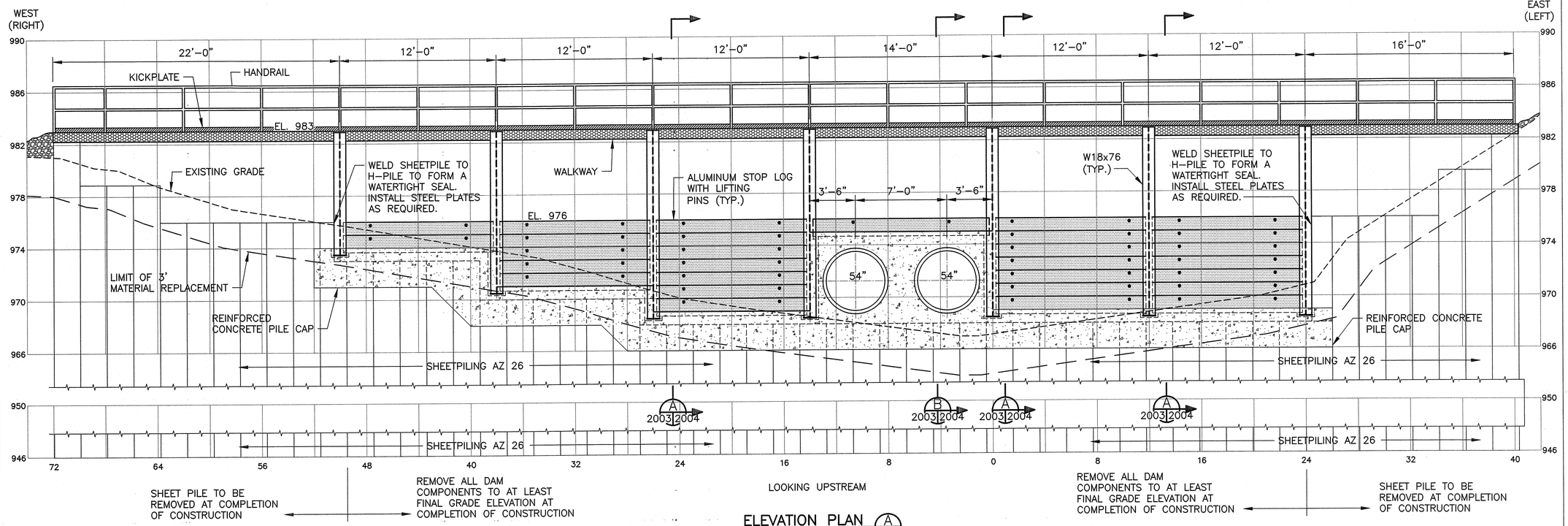


## ELEVATION PLAN (A) 2002 2003

1"=4'-0"

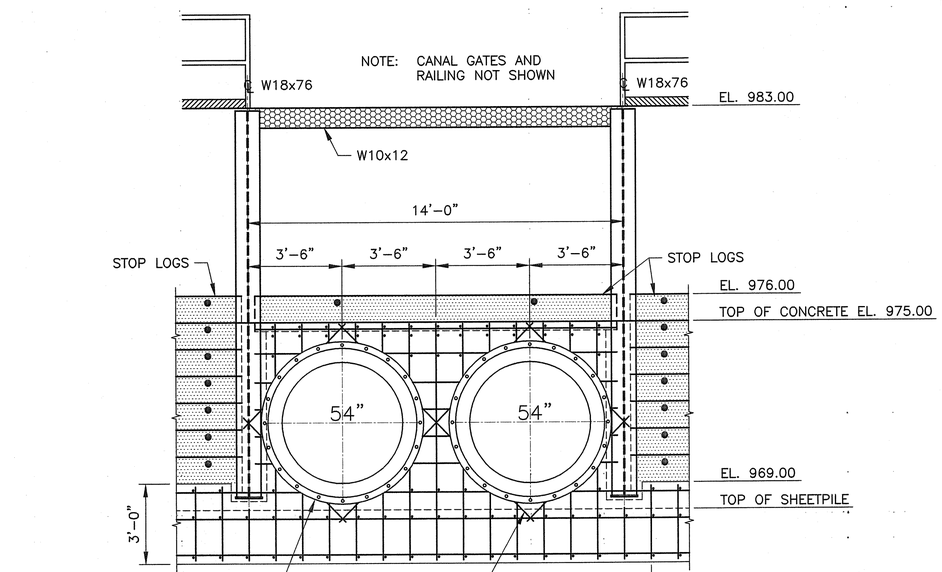


## WALL PIPE REINFORCING

(LOOKING DOWNSTREAM)

⅜"=1'-0"

NOTES:

1. UPON COMPLETION OF PHASE 2, EXCAVATION SUBCONTRACTOR TO PERMANENTLY REMOVE AND DISPOSE OF ALL DAM STRUCTURAL ELEMENTS, INCLUDING BUT NOT LIMITED TO STOP LOGS, CATWALK, H-PILES, CONCRETE HEADWALL, AND ALL PIPING. REMOVAL TO BE ACCOMPLISHED IN THE DRY BY PULLING UP ORIGINAL CELL SHEETPILES (OR REINSTALLING) AND DEWATERING CELL (BOTH SIDES OF RIVER).

2. ALUMINUM STOP LOGS SHALL BE RODNEY HUNT STANDARD, OR APPROVED EQUAL, FABRICATED TO MEET FIELD CONDITIONS, AS WELL AS MANUFACTURER'S STANDARDS FOR SLIDE GATES AND SEALS. SUBMIT FABRICATION DETAILS TO ENGINEER FOR REVIEW AND APPROVAL.

3. 54" DIAM. FAB. WALL PIPE THROUGH DAM WITH 3" RADIUS FLARED END X FLANGE END, 4'-6" LONG. FLARED END SET FLUSH WITH FACE OF CONCRETE ON THE UPSTREAM END. WALL PIPE SHALL HAVE 3" HIGH x 1" WIDE STEEL LUG WELDED TO CIRCUMFERENCE AT THE DAM CENTERLINE AS SHOWN ON DWG 2004. STEEL LUG WELDED WITH TWO ¼" CONTINUOUS WELDS EACH SIDE OF LUG. WALL PIPE SHALL EXTEND 2'-6" BEYOND FACE OF CONCRETE ON DOWNSTREAM SIDE TO ALLOW CONNECTION TO HDPE PIPE FLANGE AT THAT POINT. (SEE SECTION B ON DWG 2004)

COMMONWEALTH OF MASSACHUSETTS
REGISTERED PROFESSIONAL ENGINEER
WILLIAM A. ZAHN
27113-E
4/14/03

2 0 2 4 FEET
SCALE 3/8"=1'

4 0 4 8 FEET
SCALE 1"=4'

FINAL DESIGN SUBMITTAL

US Army Corps of Engineers
New England District

| Symbol | Description | Date | Appr. | Symbol | Description | Date | Appr. |
|---|---|---|---|---|---|---|---|
| B | ISSUED FOR FINAL DESIGN | 4/14/03 | | | | | |
| A | ISSUED FOR DRAFT DESIGN | 10/3/02 | | | | | |

Designed by: W.HOFFMAN/A.HARPUR
Dwn by: E.DIFATTA
Ckd by: W.ZAHN
Reviewed by: W.ZAHN
Submitted by:
Chief, Arch. Section
Date: DEC. 2002
Design file no:
SPEC. No.:
File name:
Plot date:
Plot scale:
Rev.

DEPARTMENT OF THE ARMY
CORPS OF ENGINEERS
CONCORD, MASSACHUSETTS

WESTON
WOODWARD CLYDE CONSULTANTS

1.5 MILE REMOVAL ACTION - PHASE 1/2 TRANSITION
ENVIRONMENTAL REMEDIATION CONTRACT (SSERC)
GE/HOUSATONIC RIVER SITE
PITTSFIELD, MASSACHUSETTS

DIVERSION DAM
ELEVATION

Sheet reference number:
2003
9 OF 17

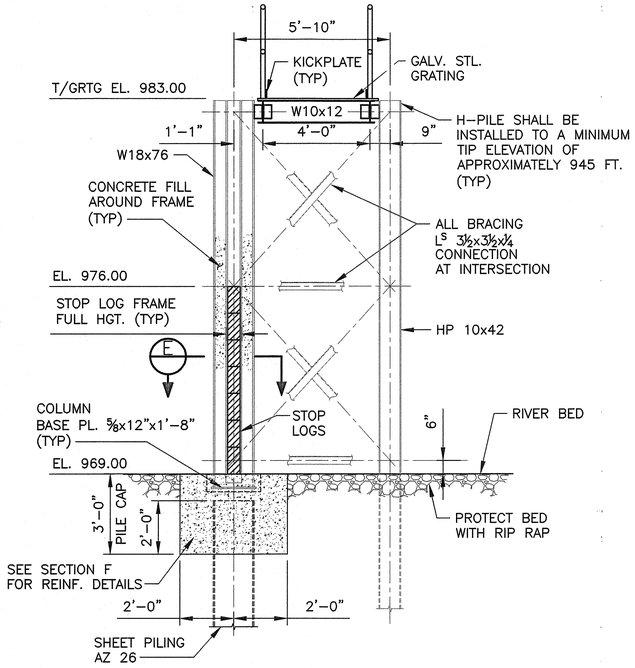


SECTION (A)
⅜"=1'-0" 2003|2004

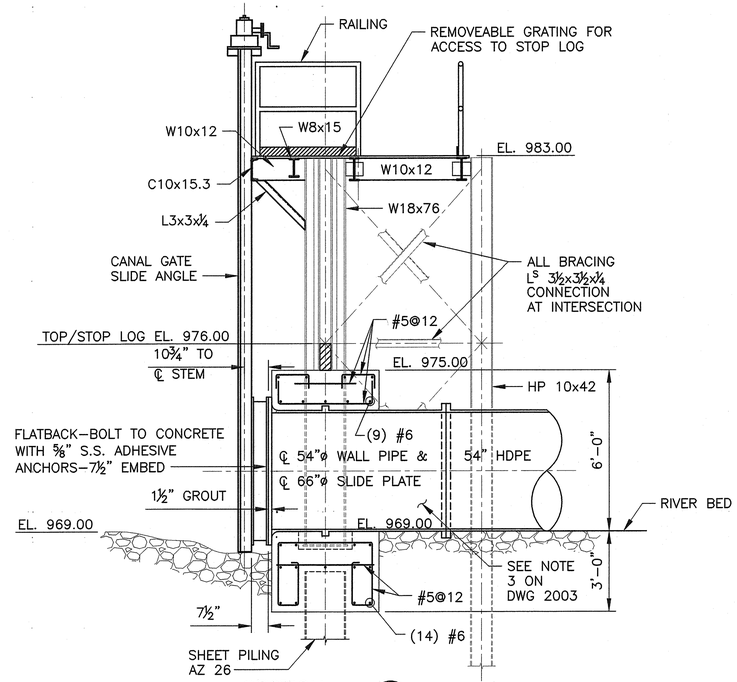


SECTION (B)
⅜"=1'-0" 2003|2004

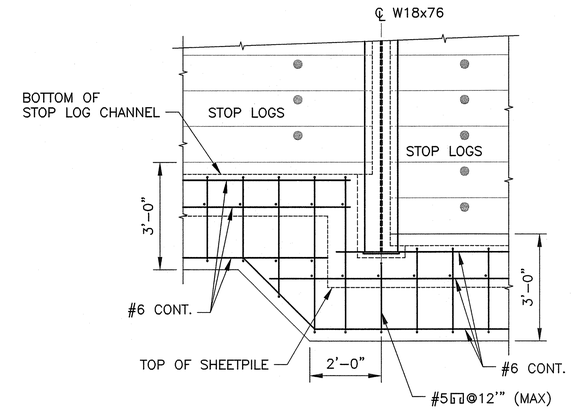


TYPICAL CONCRETE PILE CAP REINFORCEMETNT
½"=1'-0"

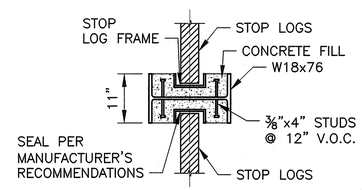


PLAN

SECTION (E)
¾"=1'-0"

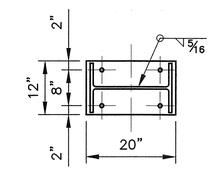


COLUMN BASE PLATE (TYP)
¾" = 1'-0"

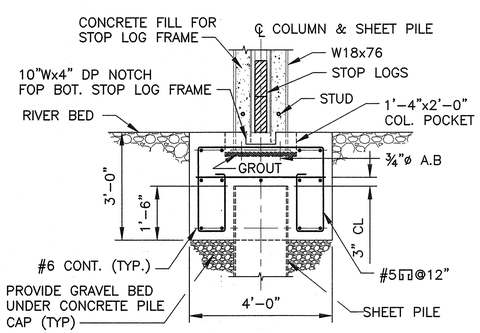


REINFORCED CONCRETE PILE CAP

SECTION (F)
½"=1'-0"

NOTE:
FILL FRAME NOTCH & COL. POCKET WITH CONCRETE AFTER FRAME & COLUMN ARE INSTALLED.

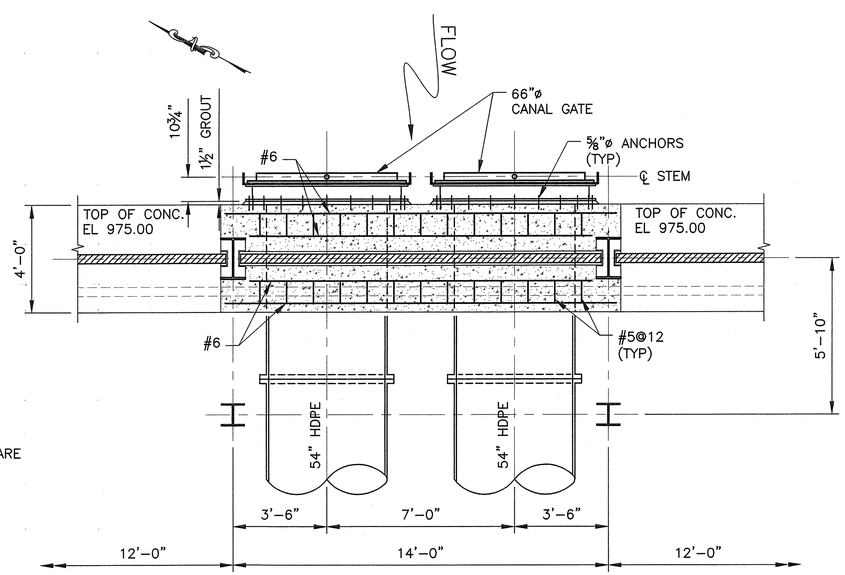


DIVERSION DAM PLAN (OVER PIPES) AT EL. 975.00
⅜"=1'-0"

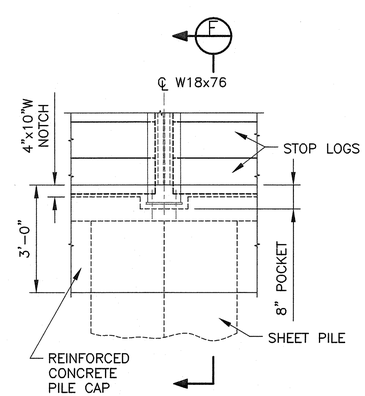


ELEVATION OF STOP LOGS AT W18x76
½"=1'-0"

2 0 2 4 FEET
SCALE 3/8"=1'

2 0 2 4 FEET
SCALE 1/2"=1'

1 0 1 2 FEET
SCALE 3/4"=1'

COMMONWEALTH OF MASSACHUSETTS
REGISTERED PROFESSIONAL ENGINEER
WILLIAM A. ZAHN
27113-E
4/14/03

FINAL DESIGN SUBMITTAL

US Army Corps of Engineers
New England District

| Symbol | Description | Date | Appr. | Symbol | Description | Date | Appr. |
|---|---|---|---|---|---|---|---|
| B | ISSUED FOR FINAL DESIGN | 4/4/03 | | | | | |
| A | ISSUED FOR DRAFT DESIGN | 10/9/02 | | | | | |

Rev.

Designed by: W.HOFFMAN
Date: DEC. 2002
Dwn by: E.DIFATTA
Ckd by: W.ZAHN
Reviewed by: W.ZAHN
Design file no:
SPEC. No.:
Submitted by:
File name:
Plot date:
Plot scale:
Chief, Arch. Section

DEPARTMENT OF THE ARMY
CORPS OF ENGINEERS
CONCORD, MASSACHUSETTS

WESTON SOLUTIONS
WOODLOT ENVIRONMENTAL

1.5 MILE REMOVAL ACTION - PHASE 1/2 TRANSITION
ENVIRONMENTAL REMEDIATION CONTRACT (SSERC)
GE/HOUSATONIC RIVER SITE
PITTSFIELD, MASSACHUSETTS
DIVERSION DAM
DETAILS 1

Sheet reference number:
2004
10 OF 17

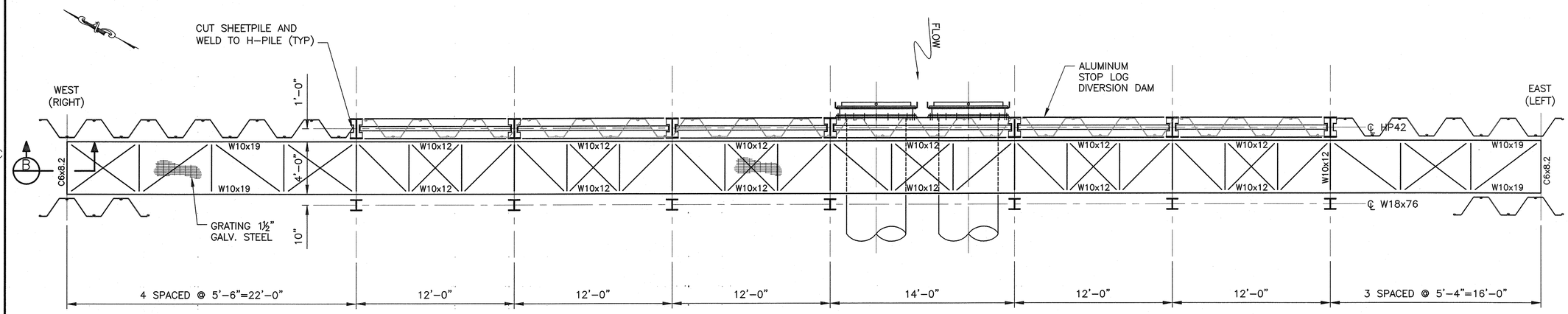


## WALKWAY PLAN
¼"=1'-0"

NOTES:

1. REFER TO DRAWING 2006 FOR ENLARGED WALKWAY PLAN OVER PIPES.
2. ALL X-BRACING L$^S$ 2½x2½x¼

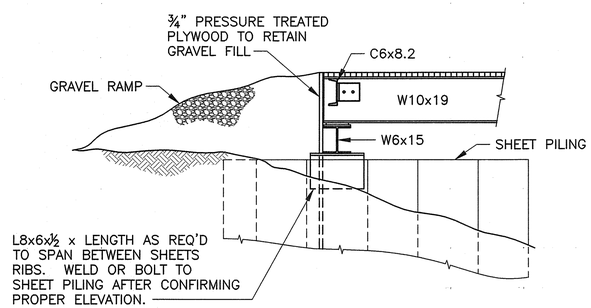


## WALKWAY TERMINUS
(WEST [RIGHT] BANK LOOKING UPSTREAM)

SECTION B
3/4"=1'-0"

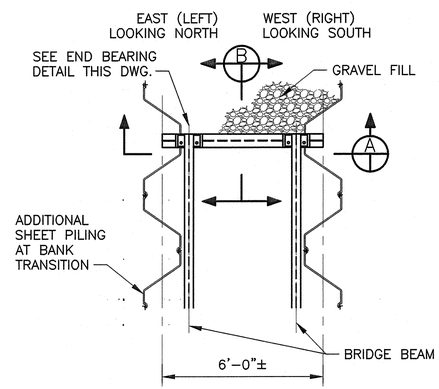


## WALKWAY TERMINUS PLAN (TYP)
⅜"=1'-0"

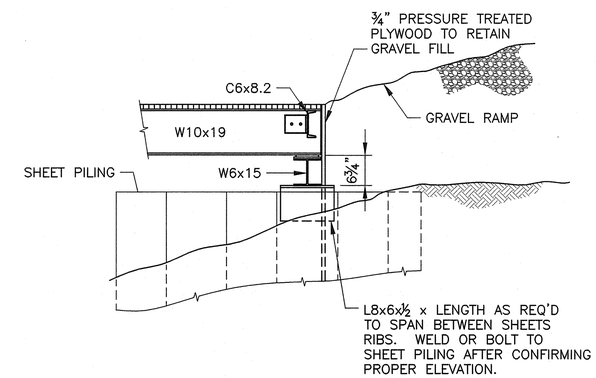


## WALKWAY TERMINUS
(EAST [LEFT] BANK LOOKING UPSTREAM)

SECTION B
3/4"=1'-0"

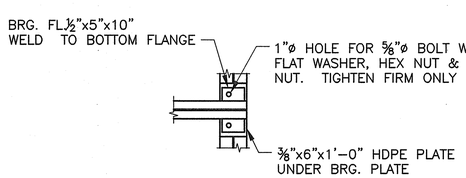


## END BEARING DETAIL
¾"=1'-0"

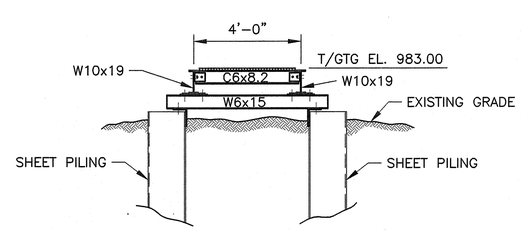


SECTION A
3/8"=1'-0"

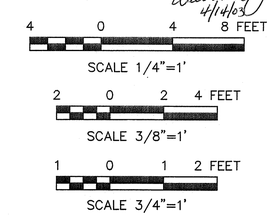


COMMONWEALTH OF PENNSYLVANIA
REGISTERED PROFESSIONAL
WILLIAM A. ZAHN
ENGINEER
27113-E
4/14/03

FINAL DESIGN SUBMITTAL

US Army Corps of Engineers
New England District

| Symbol | Description | Date | Appr |
|---|---|---|---|
| B | ISSUED FOR FINAL DESIGN | 4/14/03 | |
| A | ISSUED FOR DRAFT DESIGN | 12/19/02 | |

Designed by: W.HOFFMAN
Dwn by: E.DIFATTA
Ckd by: W.ZAHN
Reviewed by: W.ZAHN
Submitted by:
Chief, Arch. Section
Date: DEC. 2002
Design file no:
SPEC. No.:
File name:
Plot date:
Plot scale:
Rev.

DEPARTMENT OF THE ARMY
CORPS OF ENGINEERS
CONCORD, MASSACHUSETTS

WESTON SOLUTIONS
WOODLOT ALTERNATIVES, INC.

1.5 MILE REMOVAL ACTION – PHASE I/2 TRANSITION
ENVIRONMENTAL REMEDIATION CONTRACT (SSERC)
GE/HOUSATONIC RIVER SITE
PITTSFIELD, MASSACHUSETTS

DIVERSION DAM
WALKWAY PLAN & DETAILS
SHEET 1 OF 2

Sheet reference number:
2005
11 OF 17

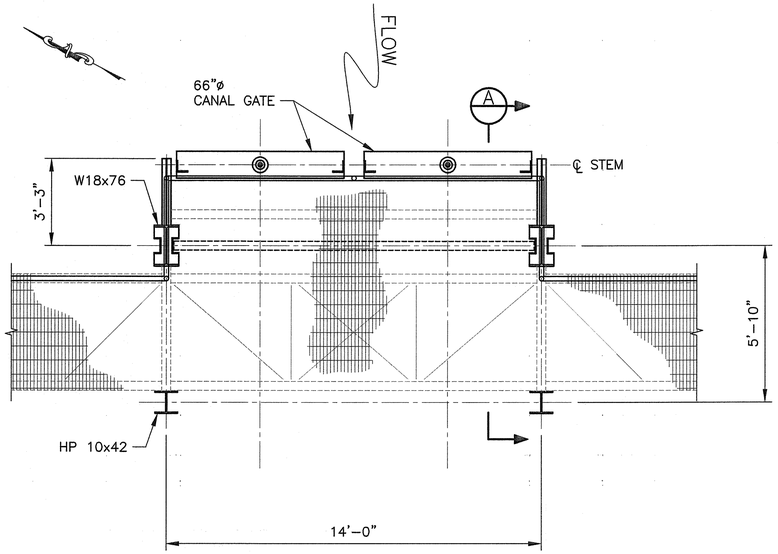


## ENLARGED WALKWAY PLAN OVER PIPES (AT EL. 983.00)

⅜"=1'-0"

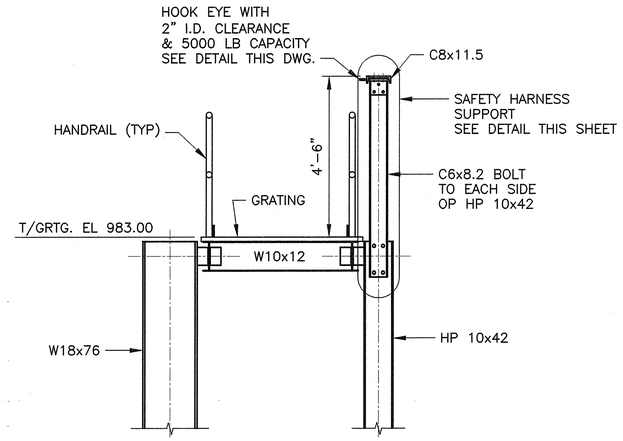


## TYPICAL SAFETY HARNESS SUPPORT SECTION

½"=1'-0"

NOTE: SAFETY HARNESS SUPPORT ASSEMBLY TO EXTEND ALONG SOUTH FACE OF WALKWAY BETWEEN HP 10x42 PILES.

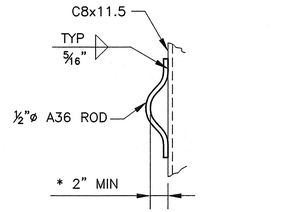


* DIMENSION TO BE VERIFIED WITH SELECTED SAFETY HARNESS

## HOOK EYE DETAIL

1½"=1'-0"

NOTE: LOCATE HOOK EYE AT MIDPOINT BETWEEN SUPPORTS.

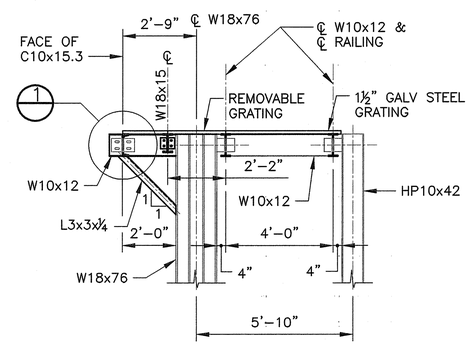


## SECTION A

3/8"=1'-0"

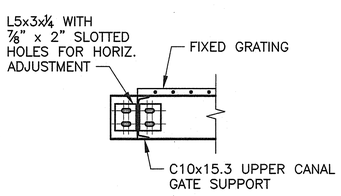


## DETAIL 1

3/4"=1'-0"

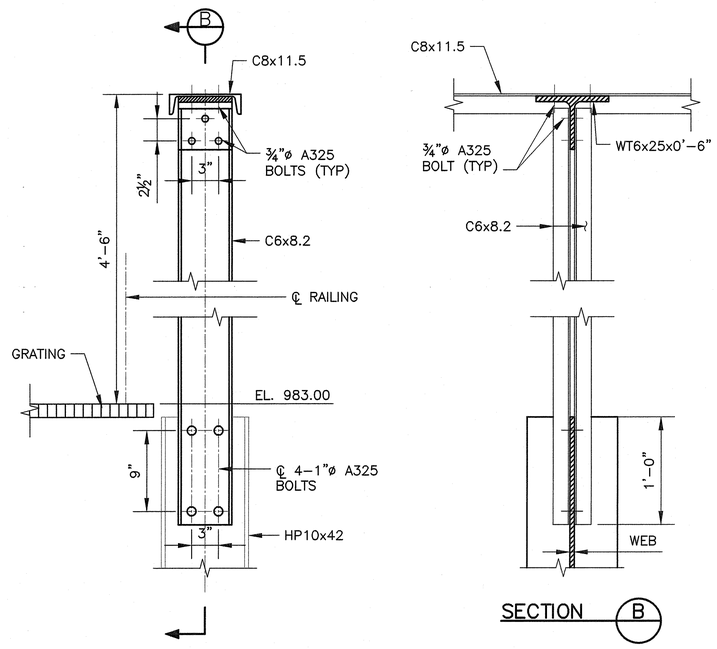


## TYPICAL SAFETY HARNESS SUPPORT DETAILS

1½"=1'-0"

## SECTION B

2 0 2 4 FEET
SCALE 3/8"=1'

2 0 2 4 FEET
SCALE 1/2"=1'

1 0 1 2 FEET
SCALE 3/4"=1'

0 1 FOOT
SCALE 1 1/2"=1'

COMMONWEALTH OF PENNSYLVANIA
REGISTERED PROFESSIONAL ENGINEER
WILLIAM A. ZAHN
27113-E
4/14/03

FINAL DESIGN SUBMITTAL

US Army Corps of Engineers
New England District

| Symbol | Description | Date | Appr. | Symbol | Description | Date | Appr. |
|---|---|---|---|---|---|---|---|
| A | ISSUED FOR DRAFT DESIGN | 12/9/02 | | B | ISSUED FOR FINAL DESIGN | 4/14/03 | |

Designed by: W.HOFFMAN
Dwn by: E.DIFATTA
Ckd by: W.ZAHN
Reviewed by: W.ZAHN
Submitted by:
Chief, Arch. Section
Date: DEC. 2002
Design file no:
SPEC. No.:
File name:
Plot date:
Plot scale:
Rev.

DEPARTMENT OF THE ARMY
CORPS OF ENGINEERS
CONCORD, MASSACHUSETTS

WESTON
WOODPLOT

1.5 MILE REMOVAL ACTION – PHASE I/2 TRANSITION
ENVIRONMENTAL REMEDIATION CONTRACT (SSERC)
GE/HOUSATONIC RIVER SITE
PITTSFIELD, MASSACHUSETTS

DIVERSION DAM
WALKWAY PLAN & DETAILS
SHEET 2 OF 2

Sheet reference number:
2006
12 OF 17

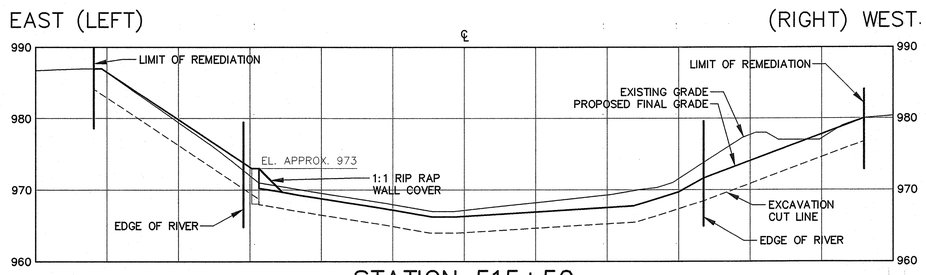


STATION 515+50

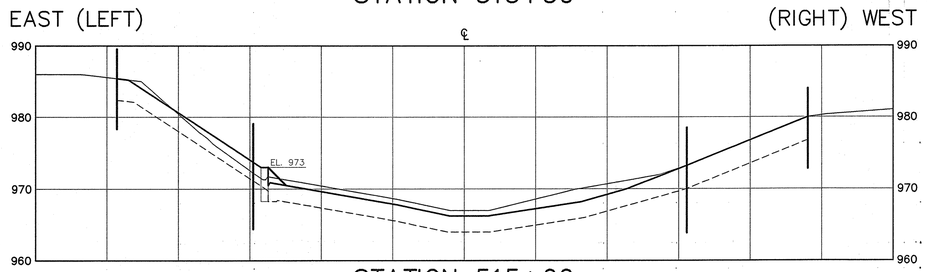


STATION 515+00

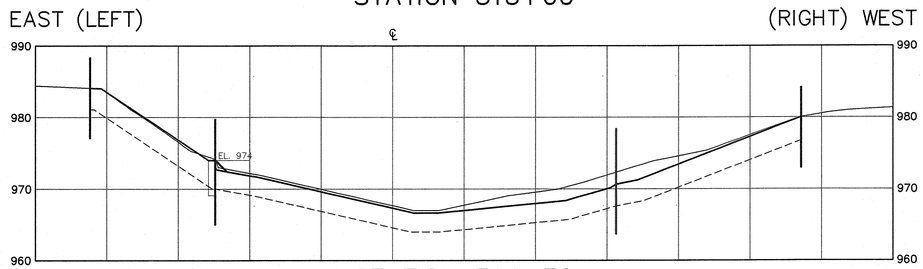


STATION 514+50

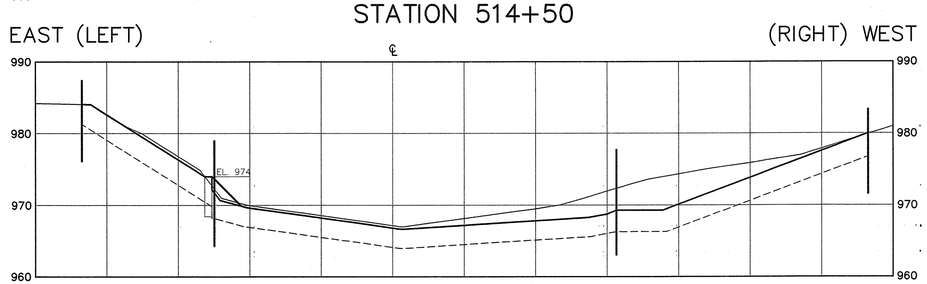


STATION 514+08.22

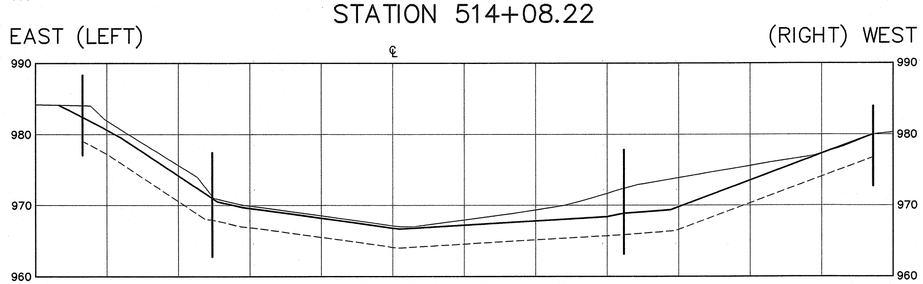


STATION 514+00

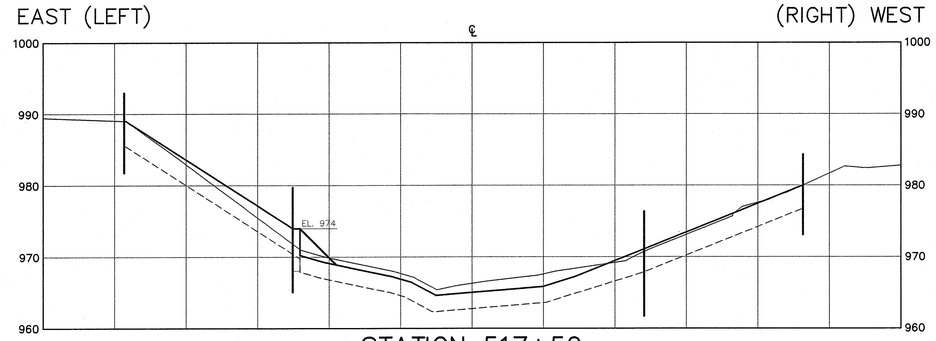


STATION 517+50

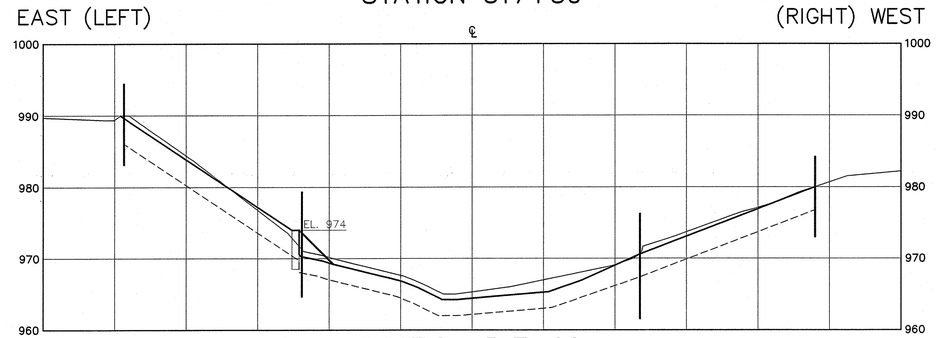


STATION 517+00

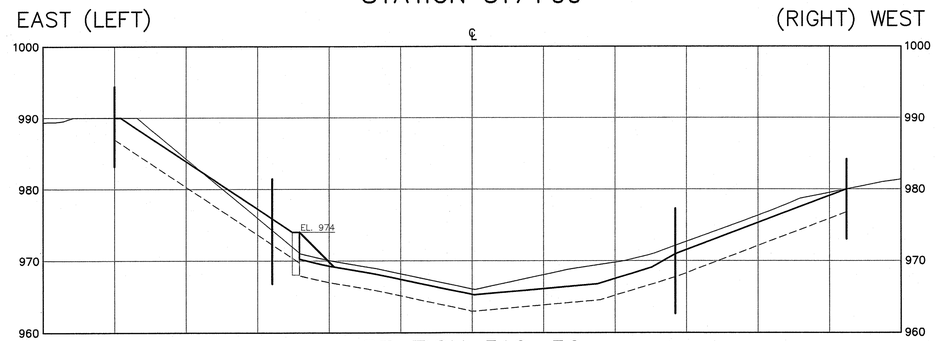


STATION 516+50

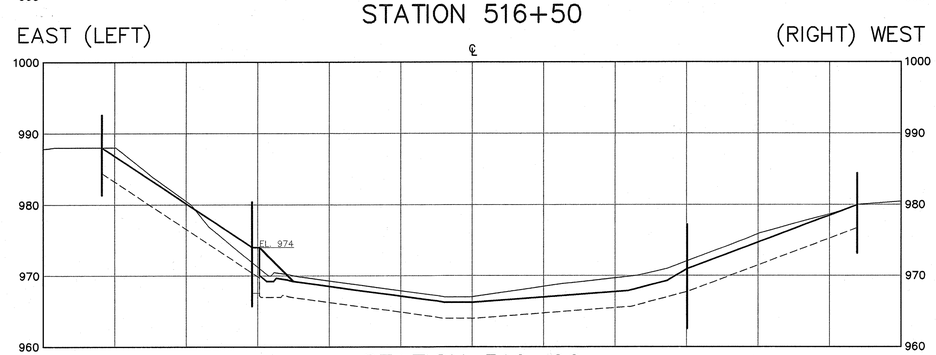


STATION 516+00

STATE OF MAINE
Richard Anthony Delano
7683
REGISTERED PROFESSIONAL ENGINEER
4/15/03

COMMONWEALTH OF MASSACHUSETTS
REGISTERED PROFESSIONAL ENGINEER
WILLIAM A. ZAHN
27113-E
4/14/03

NOTES:

ARMOR ELEVATIONS:

EAST BANK: RIVER BANK ARMOR WILL EXTEND UP TO EL. 976 AT ALL LOCATIONS, INCLUDING WHERE THE RETAINING WALL IS LOCATED.

WEST BANK:
- STA 514+00 TO 514+50 EL. 976
- STA 514+50 TO 516+50 EL. 973.5
- STA 516+50 TO 516+75 TRANSITION FROM 973.5 TO 975
- STA 516+75 TO 519+70 EL. 975
- STA 519+70 TO 521+68 SEE CROSS-SECTIONS AND PLAN VIEW

SLOPES:

EAST BANK:
- STA 514+00 TO 518+00 ABOVE WALL SLOPE IS 1.5:1
- STA 518+00 TO 521+68 RIP RAP SLOPE IS 2:1 UP TO EL. 976; ABOVE EL. 976, SLOPE IS MAX. GRADE OF 1.5:1

WEST BANK:
- STA 514+00 TO 519+70 MAX. SLOPE ALLOWED IS 2.5:1
- STA 519+70 TO 521+50 MAX. RIP RAP SLOPE IS 1.5:1, MAX. SLOPE ABOVE RIP RAP 2.5:1 WITHOUT SLOPE REINFORCING, 1.5:1 WITH SLOPE REINFORCING
- STA 521+50 TO 521+68 SLOPES MAY EXCEED THOSE AS NOTED FOR STA 519+70 TO 521+50, SUBJECT TO FIELD CONDITIONS AND REVIEW AND APPROVAL BY THE ENGINEER

GRAPHIC SCALE
10 5 0 5 10
APPROXIMATE SCALE IN FEET

FINAL DESIGN SUBMITTAL

US Army Corps of Engineers
New England District

| Symbol | Description | Date | Appr. | Symbol | Description | Date | Appr. |
|---|---|---|---|---|---|---|---|
| A | ISSUED FOR FINAL DESIGN | MM/DD | | | | | |

Designed by:
Dwn by: BEG
Ckd by:
Reviewed by:
Submitted by:
Chief, Arch. Section
Date:
Design file no:
SPEC. No.:
File name: SHEET-XSECTIONS
Plot date: 4-14-03
Plot scale: 1:1
Rev. A

DEPARTMENT OF THE ARMY
CORPS OF ENGINEERS
CONCORD, MASSACHUSETTS

WESTON SOLUTIONS
WOODLOT ENVIRONMENTAL

1.5 MILE REMOVAL ACTION – PHASE 1/2 TRANSITION
ENVIRONMENTAL REMEDIATION CONTRACT (SSERC)
GE/HOUSATONIC RIVER SITE
PITTSFIELD, MASSACHUSETTS

EXISTING AND PROPOSED
RIVERBANK CROSS-SECTIONS
SHEET 1 OF 2

Sheet reference number:
2007
13 OF 17

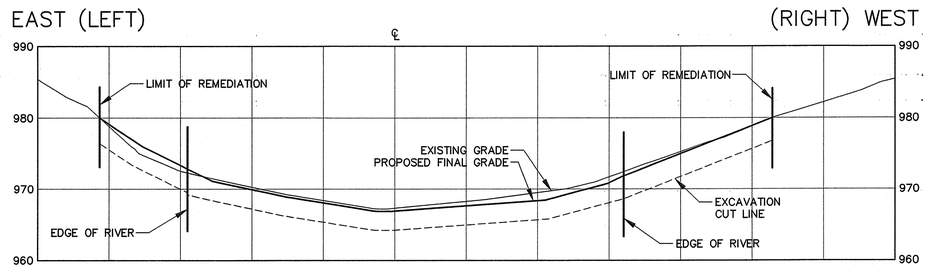


STATION 519+50

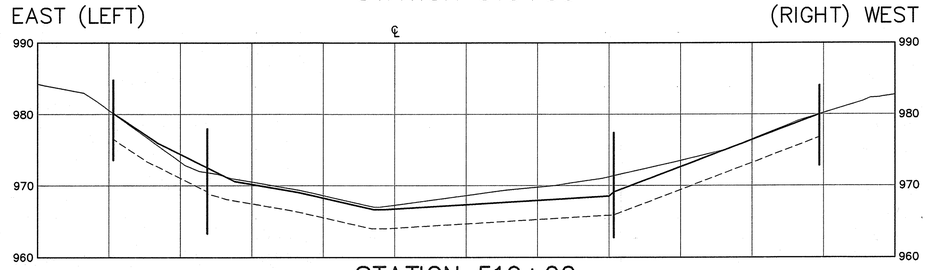


STATION 519+00

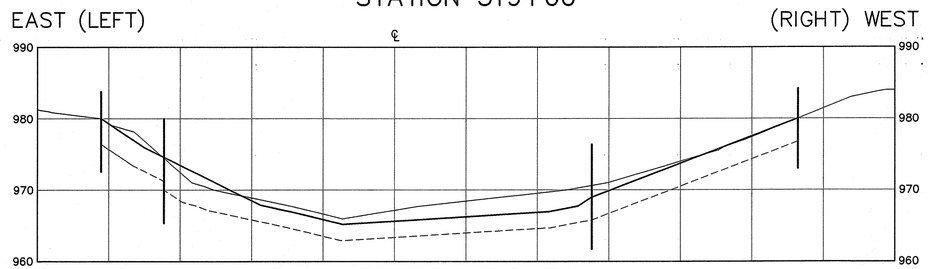


STATION 518+50

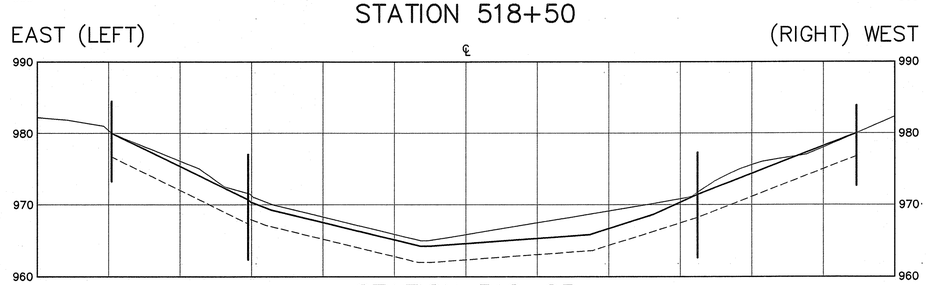


STATION 518+25

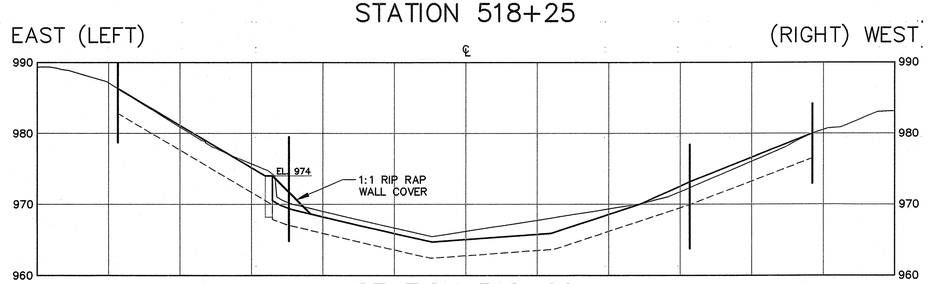


STATION 518+00

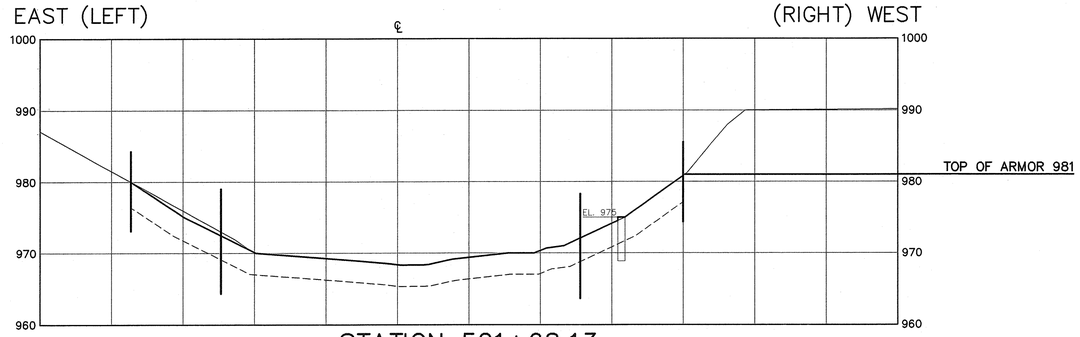


STATION 521+68.13

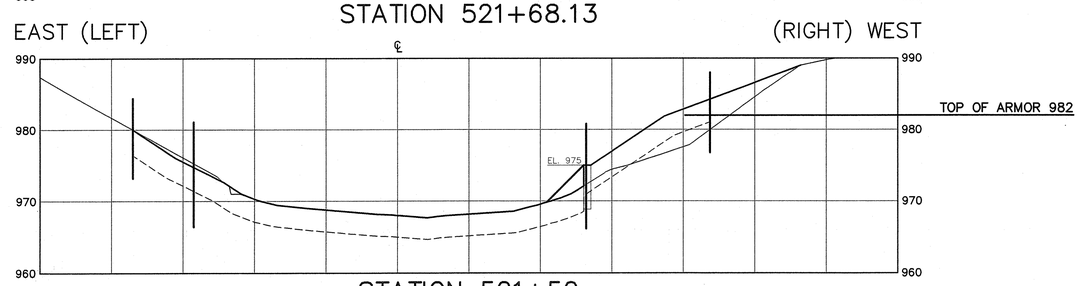


STATION 521+50

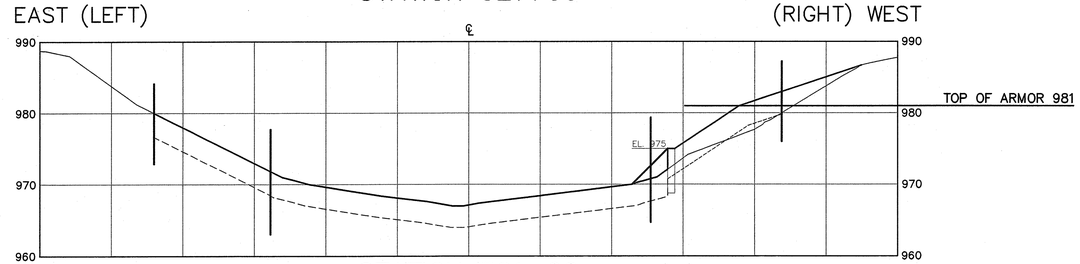


STATION 521+00

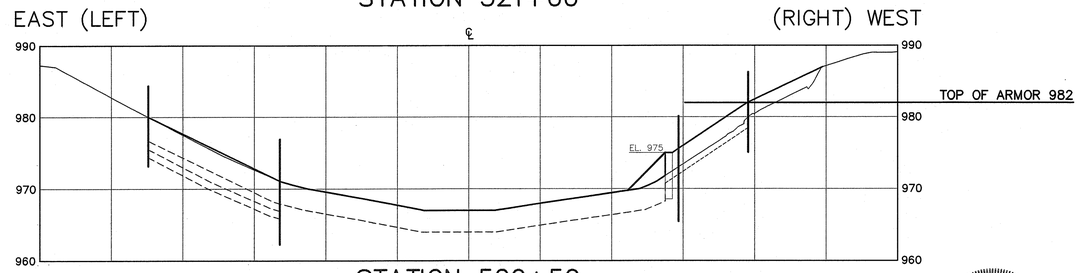


STATION 520+50

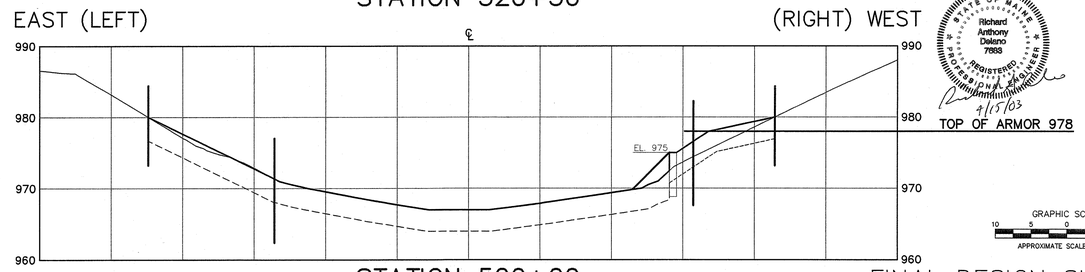


STATION 520+00

STATE OF MAINE
Richard Anthony Deleno
7893
REGISTERED PROFESSIONAL ENGINEER
4/15/03

COMMONWEALTH OF PENNSYLVANIA
REGISTERED PROFESSIONAL
WILLIAM A. ZAHN
ENGINEER
27113-E
4/14/03

GRAPHIC SCALE
10 5 0 5 10
APPROXIMATE SCALE IN FEET

FINAL DESIGN SUBMITTAL

US Army Corps of Engineers
New England District

| Symbol | Description | Date | Appr. |
|---|---|---|---|
| A | ISSUED FOR FINAL DESIGN | 4/14/03 | |

Designed by: Dwn by: BEG Ckd by: Reviewed by: Submitted by: Chief, Arch. Section
Date: Design file no: SPEC. No.:
Rev. A
File name: SHEET-XSECTIONS
Plot date: 4-14-03
Plot scale: 1:1

DEPARTMENT OF THE ARMY
CORPS OF ENGINEERS
CONCORD, MASSACHUSETTS

WESTON
WOODWARD CLYDE

1.5 MILE REMOVAL ACTION – PHASE 1/2 TRANSITION
ENVIRONMENTAL REMEDIATION CONTRACT (SSERC)
GE/HOUSATONIC RIVER SITE
PITTSFIELD, MASSACHUSETTS

EXISTING AND PROPOSED
RIVERBANK CROSS-SECTIONS
SHEET 2 OF 2

Sheet reference number:
2008
14 OF 17

## BOULDER CLUSTER (TYP.)

NOT TO SCALE 2101 2101




PLAN VIEW




SECTION A

NOT TO SCALE

DETAIL NOTES:

1) BOULDER QUANTITIES, LOCATIONS, SPACINGS, AND ORIENTATIONS VARY. SPECIFIC BOULDER PLACEMENT WILL BE DETERMINED DURING CONSTRUCTION UNDER THE DIRECTION OF THE PROJECT ENGINEER.
2) BOULDERS SHALL BE PLACED ON TOP OF BED ARMOR LAYER. DEPENDING ON RIVERBED MORPHOLOGY AND BOULDER SHAPE, SOME BOULDERS MAY EXTEND VERTICALLY ABOVE LOW FLOW ELEVATION (MAX. 1.0').
3) BED AND BANK ARMOR SIZE AND THICKNESS VARIES (SEE SHEET 2001).

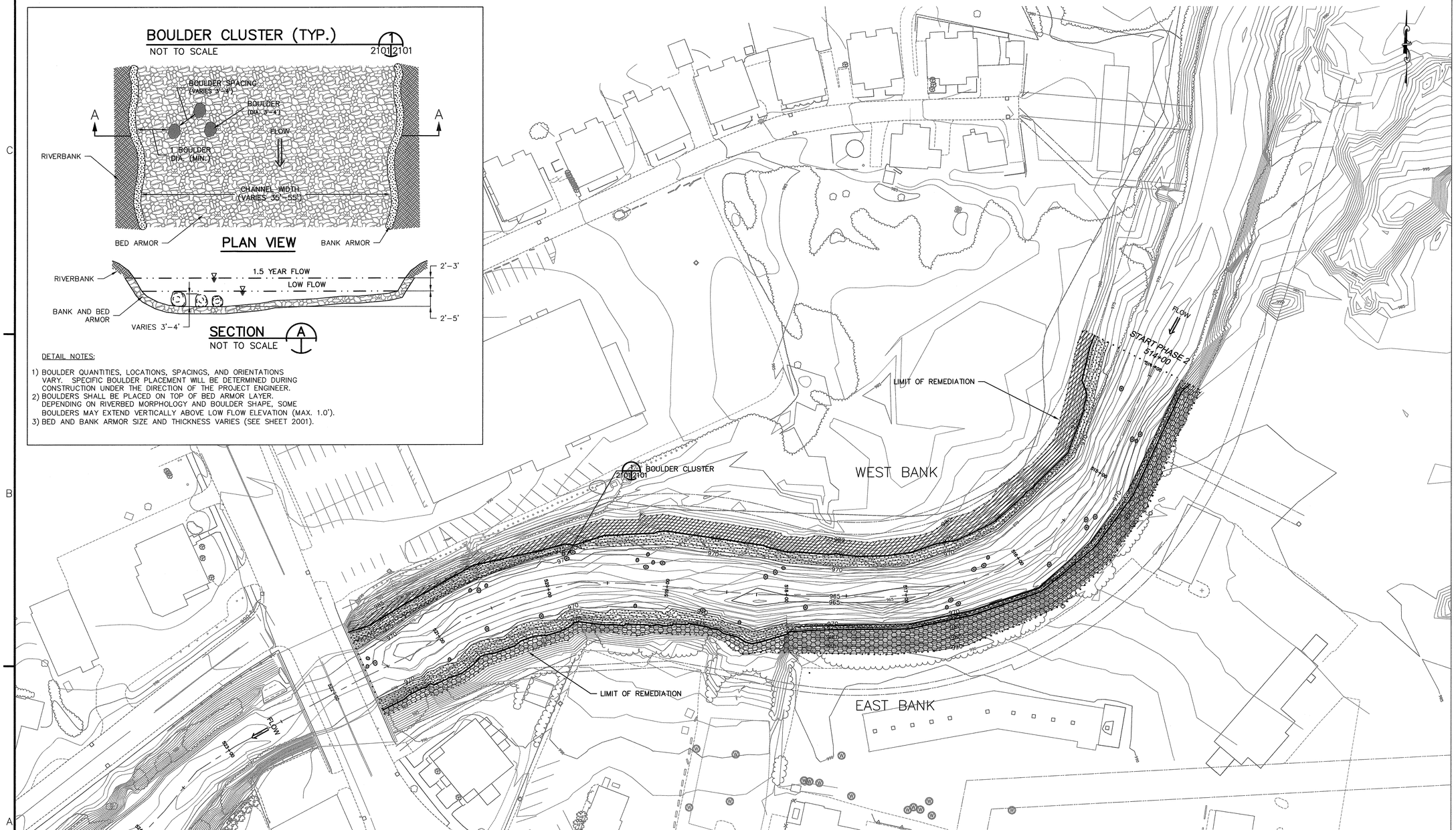
BOULDER CLUSTER
2101 2101
WEST BANK
EAST BANK
LIMIT OF REMEDIATION
LIMIT OF REMEDIATION
START PHASE 2
514+00
FLOW
FLOW
985
970
965
950
945
940
935
930
925
920
915
910
905
900
895
890
885
880
875
870
865
860
855
850
845
840
835
830
825
820
815
810
805
800
795
790
785
780
775
770
765
760
755
750
745
740
735
730
725
720
715
710
705
700
695
690
685
680
675
670
665
660
655
650
645
640
635
630
625
620
615
610
605
600
595
590
585
580
575
570
565
560
555
550
545
540
535
530
525
520
515
510
505
500
495
490
485
480
475
470
465
460
455
450
445
440
435
430
425
420
415
410
405
400
395
390
385
380
375
370
365
360
355
350
345
340
335
330
325
320
315
310
305
300
295
290
285
280
275
270
265
260
255
250
245
240
235
230
225
220
215
210
205
200
195
190
185
180
175
170
165
160
155
150
145
140
135
130
125
120
115
110
105
100
95
90
85
80
75
70
65
60
55
50
45
40
35
30
25
20
15
10
5
0
-5
-10
-15
-20
-25
-30
-35
-40
-45
-50
-55
-60
-65
-70
-75
-80
-85
-90
-95
-100
-105
-110
-115
-120
-125
-130
-135
-140
-145
-150
-155
-160
-165
-170
-175
-180
-185
-190
-195
-200

# PLANTING SCHEDULE

| PLANTING AREA | AREA (SQ. FT.) | TREES* | | | | SHRUBS | | | | | VINES | Totals |
|---|---|---|---|---|---|---|---|---|---|---|---|---|
| | | Black Willow | Box-Elder | Silver Maple | Eastern Cottonwood | Red-Osier Dogwood Band | Silky Dogwood | Northern Arrowwood | Winterberry | Choke Cherry | River Grape | |
| 13 | 8,116 | 22 (14/8) | 88 (82/6) | 22 (14/8) | NA | 66 | 13 | 13 | 13 | 13 | 10 | 260 |
| 14 | 2,977 | 12 (3/9) | NA | 12 (3/9) | 24 (18/6) | 61 | NA | NA | NA | NA | NA | 109 |
| 15 | 7,617 | 35 (6/29) | 27 (17/10) | 35 (6/29) | 27 (17/10) | 95 | 13 | 13 | 13 | 13 | 10 | 281 |
| 16 | 1,133 | 3 (2/1) | 7 (6/1) | 3 (2/1) | 7 (6/1) | 7 | NA | NA | NA | NA | NA | 27 |
| Totals | 19,843 | 72 | 122 | 72 | 58 | 229 | 26 | 26 | 26 | 26 | 20 | 677 |

* PLANT NUMBERS=TOTAL (UPPER BANK/LOWER BANK)

# SEED MIX SPECIFICATIONS

| SPECIES | COMMON NAME | PERCENT BY WEIGHT |
|---|---|---|
| Elymus riparius | stream bank wild rye | 25 |
| Elymus canadensis | Canada wild rye | 15 |
| Panicum clandestinum | deer-tongue | 15 |
| Poa palustris | fowl bluegrass | 10 |
| Agrostis stolonifera | creeping bentgrass | 10 |
| Desmodium canadense | showy tick-trefoil | 5 |
| Polygonum pensylvanicum | Pennsylvania smartweed | 5 |
| Asclepias syriaca | common milkweed | 2 |
| Rubus allegheniensis | common blackberry | 2 |
| Solidago canadensis | Canada goldenrod | 2 |
| Solidago gigantea | smooth goldenrod | 2 |
| Solidago rugosa var. rugosa | wrinkled goldenrod | 2 |
| Aster puniceus | bristly aster | 2 |
| Aster lateriflorus | calico or golden aster | 1 |
| Aster macrophyllus | big-leaved aster | 1 |
| Verbena hastata | blue vervain | 1 |

PLANTING NOTES:

1) TREES SHALL BE CONTAINERIZED NURSERY STOCK 4' TO 6' HIGH. TREES SHALL BE PLANTED AT A DENSITY OF 700 PER ACRE, UNEVENLY SPACED (APPROXIMATELY 8' ON CENTER) IN SINUOUS ROWS ROUGHLY PARALLEL TO RIVER.
   TREE SPECIES TO BE PLANTED:
   BLACK WILLOW (Salix nigra)
   SILVER MAPLE (Acer saccharinum)
   EASTERN COTTONWOOD (Populus deltoides)
   BOX ELDER (Acer negundo)
   TREE SPECIES SHALL BE DISTRIBUTED THROUGHOUT UPPER AND LOWER BANKS AS FOLLOWS:
   LOWER BANK: 75% SILVER MAPLE AND BLACK WILLOW
   25% COTTONWOOD AND BOX ELDER
   UPPER BANK: 75% COTTONWOOD AND BOX ELDER
   25% SILVER MAPLE AND BLACK WILLOW
   [EXCEPT ON EAST RIVERBANK AT STATIONS 514+00 TO 518+00 (ALL COTTONWOOD REPLACE WITH BOX ELDER) AND 518+00 TO 521+70 (ALL BOX ELDER REPLACE WITH COTTONWOOD)]
2) SHRUBS SHALL BE CONTAINERIZED NURSERY STOCK 2' TO 3' HIGH. SHRUBS SHALL BE PLANTED AT A DENSITY OF 730 PER ACRE. SHRUBS ARE DISTRIBUTED IN CLUMPS OR IN SINGLE BANDS AS FOLLOWS:
   A) CLUMPS- SHRUBS SHALL BE SPACED 4' O.C. WITHIN 15'X60' OBLONG CLUMPS. THE CLUMPS SHALL BE SPACED MORE THAN 40' APART AND INCLUDE THE FOLLOWING SPECIES, WHICH ARE EVENLY DISTRIBUTED WITHIN THE CLUMP:
   SILKY DOGWOOD (Cornus amomum)
   NORTHERN ARROWWOOD (Viburnum dentatum)
   WINTERBERRY (Ilex verticillata)
   CHOKE CHERRY (Prunus virginiana)
   B) RED-OSIER DOGWOOD (Cornus sericea) BAND- THE BAND SHALL BE INSTALLED IN THE LOWER BANK WITHIN 2' OF THE TOP OF BANK ARMOR. PLANTS SHALL BE SPACED 6' O.C.
3) VINES SHALL BE CONTAINERIZED NURSERY STOCK, PLANTED AT A DENSITY OF 40 PER ACRE ON 8' O.C. VINES SHALL BE PLANTED 3 YEARS AFTER INITIAL TREE AND SHRUB PLANTING IN 15'X30' OBLONG CLUMPS, WHICH ARE TO BE SPACED MORE THAN 150' APART.
   VINE SPECIES TO BE PLANTED:
   RIVER GRAPE (Vitis riparia)

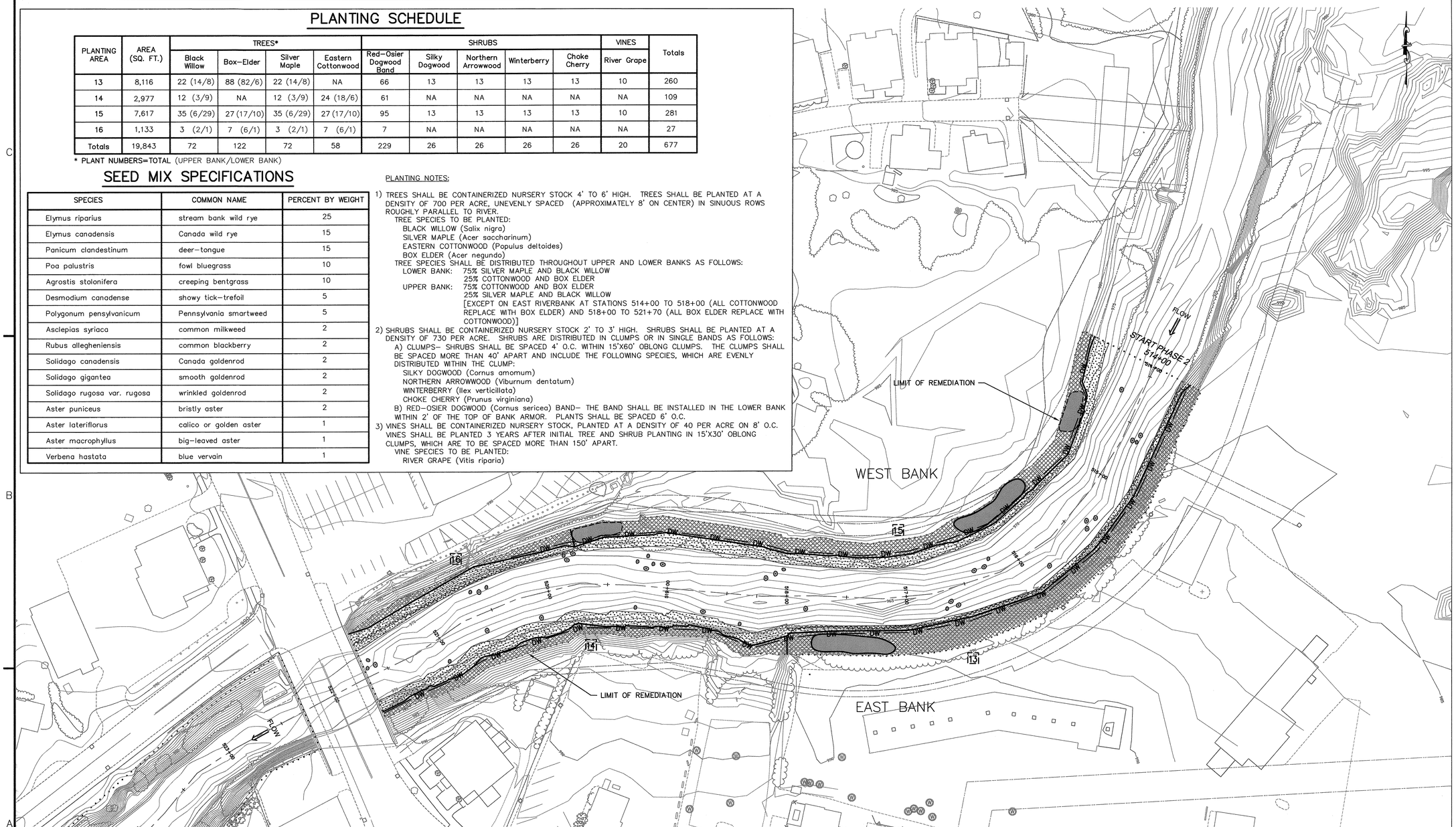


PLAN NOTES:

1) REFER TO SHEET 2101 FOR STABILIZATION METHODS AND SHEET 2103 FOR ADDITIONAL PLANTING DETAILS.
2) BASEMAP INFORMATION INCLUDING ROAD LOCATIONS, RIVERLINE, TOPOGRAPHY, AND LIMIT OF REMEDIATION PROVIDED BY WESTON SOLUTIONS, INC. (04/2003).
3) THE NATIVE HERBACEOUS SEED MIX SPECIFIED ABOVE WILL BE APPLIED ON ALL REVEGETATION AREAS AT A RATE OF 1 lb/1000 S.F.
4) ON EAST RIVERBANK FROM 516+00 TO 517+00, ARBORVITAE, HEMLOCK, OR EQUIVALENT HEDGE TO BE INSTALLED NEAR TOP OF RIVERBANK OUTSIDE OF LIMIT OF REMEDIATION. ACTUAL SPECIES, LOCATION, AND SPACING TO BE DETERMINED BY PROJECT ENGINEER AND PROPERTY OWNER.
5) PROJECT VERTICAL DATUM BASED ON NAVD 88.
6) LOWER BANK REFERS TO PORTIONS OF THE PLANTING AREA BELOW ELEVATION 978'. UPPER BANK REFERS TO PORTIONS OF THE PLANTING AREA ABOVE ELEVATION 978'.

| BANK STABILIZATION TYPE | TOTAL AREA (sq.ft) APPROXIMATE |
|---|---|
| REVEGETATION | 8,617 (770 L.F.) |
| REVEGETATION WITH GEOWEB | 11,093 (770 L.F.) |
| BANK ARMOR | 1,561 L.F. |
| SHEET PILE WALL | 655 L.F. |

LEGEND

- EXISTING CONTOURS
- SHEET PILE WALL WITH ROCK WALL
- LIMIT OF REMEDIATION

PLANTING KEY

- 13 PLANTING AREA
- TREES AND SHRUBS TO BE ADDED
- BANK ARMOR
- SHRUB CLUMP
- VINE CLUMP
- —DW— DOGWOOD BAND

40 0 40 80 FEET
SCALE 1"=40'

FINAL DESIGN SUBMITTAL

US Army Corps of Engineers
New England District

| Symbol | Description | Date | Appr. | Symbol | Description | Date | Appr. |
|---|---|---|---|---|---|---|---|
| B | ISSUED FOR FINAL DESIGN | 4/14/03 | | | | | |
| A | ISSUED FOR DRAFT DESIGN | 10/28/02 | | | | | |

Designed by: WRS
Dwn by: KWH
Ckd by: MRC
Reviewed by:
Submitted by:
Chief, Arch. Section
Date:
Rev. B
Design file no:
SPEC. No.:
File name: 2102
Plot date: 4/14/03
Plot scale: 1:1

DEPARTMENT OF THE ARMY
CORPS OF ENGINEERS
CONCORD, MASSACHUSETTS

WESTON SOLUTIONS
WOODLOT ENVIRONMENTAL

1.5 MILE REMOVAL ACTION – PHASE I/II TRANSITION
ENVIRONMENTAL REMEDIATION CONTRACT (SSERC)
GE/HOUSATONIC RIVER SITE
PITTSFIELD, MASSACHUSETTS
TRANSITION AREA
REVEGETATION RESTORATION

Sheet reference number:
2102
16 OF 17

m:\Design\DMP\ACOE\SSERC\2nd_Ext\TRANSITION DESIGN DRAWINGS\woodlot drawings\Final Drawings\2102.dwg, SHEET 2102, 04/15/2003 11:50:17 AM, glorstad, 1:1

## BANK REVEGETATION (TYP.) 1 2102 2103

NOT TO SCALE (SLOPE GRADE AND LENGTH VARY)

### WALL REVEGETATION

NOTES:

1) PROPOSED GRADES AND BANK ARMOR ELEVATIONS VARY SEE SHEETS 2001, 2007, AND 2008.
2) PROJECT VERTICAL DATUM BASED ON NAVD 88.

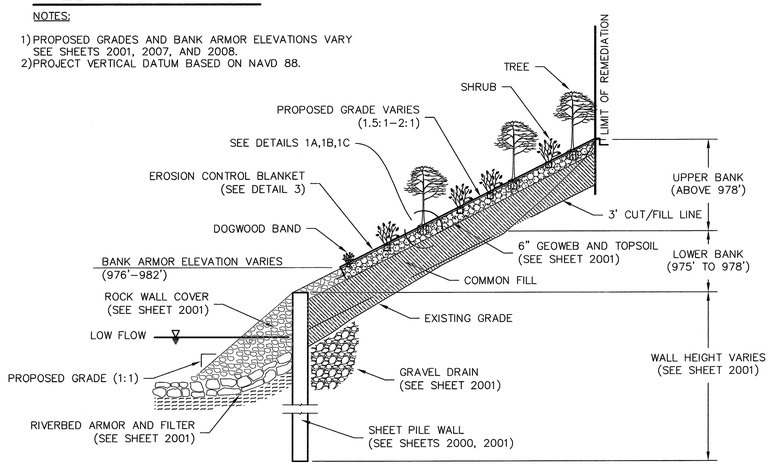


### STRAIGHT REVEGETATION

NOTES:

1) PROPOSED GRADES AND BANK ARMOR ELEVATIONS VARY SEE SHEETS 2001, 2007, AND 2008.
2) PROJECT VERTICAL DATUM BASED ON NAVD 88.

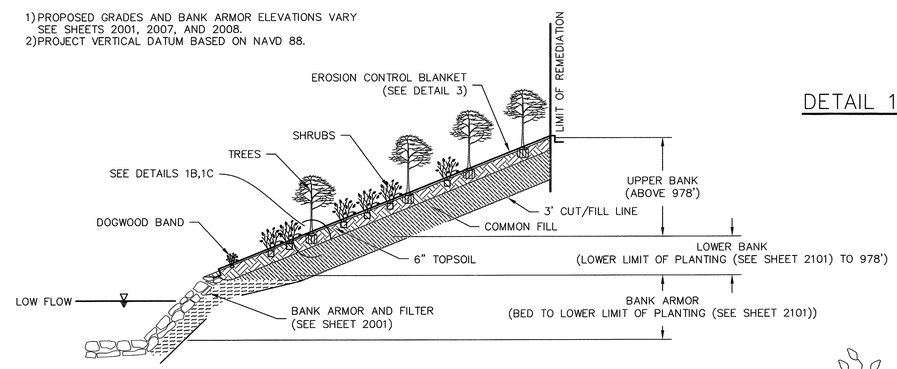


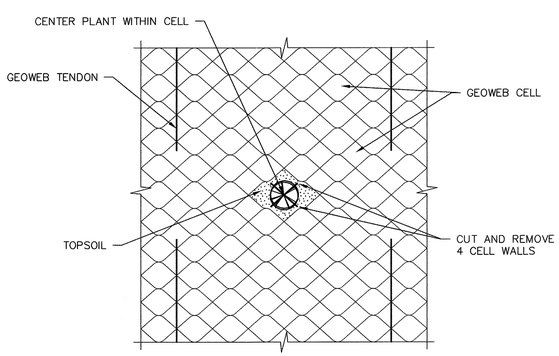


DETAIL 1A–GEOWEB PLANTING

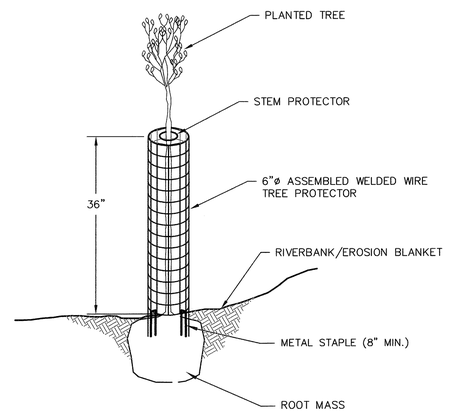


DETAIL 1C–TREE PROTECTOR

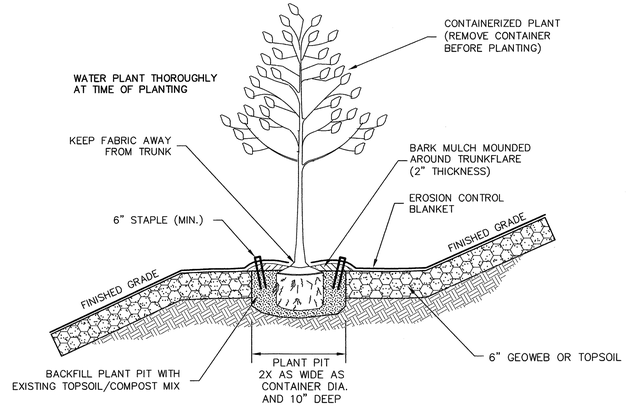


DETAIL 1B–TREE PLANTING

## PLANTING LAYOUT FOR REVEGETATION AREAS (TYP.) 2 2102 2103

NOT TO SCALE

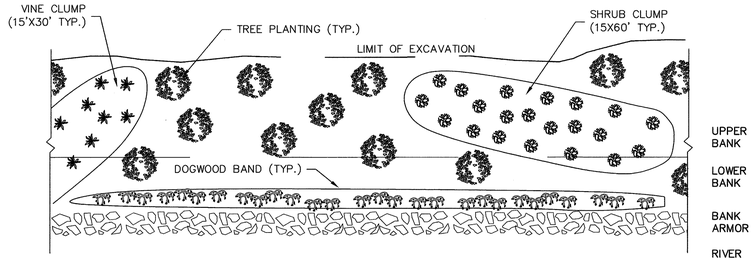


## EROSION CONTROL BLANKET (TYP.) 3 2102 2103

NOT TO SCALE

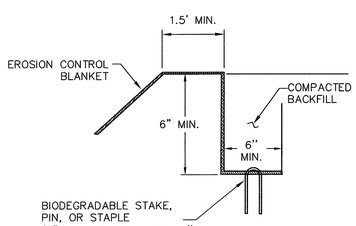


DETAIL 3A

### ISOMETRIC

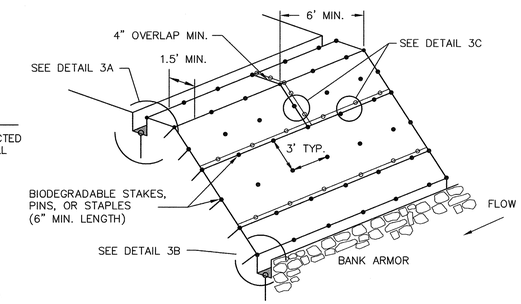


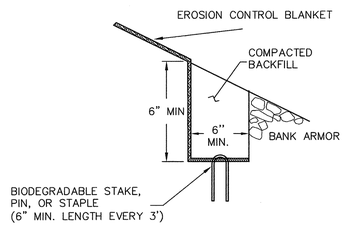


DETAIL 3B

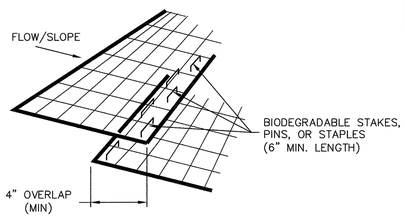


DETAIL 3C

FINAL DESIGN SUBMITTAL

US Army Corps of Engineers
New England District

| Symbol | Description | Date | Appr. |
|---|---|---|---|
| B | ISSUED FOR FINAL DESIGN | 4/14/03 | |
| A | ISSUED FOR DRAFT DESIGN | 10/28/02 | |

Designed by: WRS
Dwn by: KWH/JD
Ckd by: MRC
Reviewed by:
Submitted by:
Chief, Arch. Section
Date:
Rev: B
Design file no:
SPEC. No.:
File name: 2103
Plot date: 4/14/03
Plot scale: 1:1

DEPARTMENT OF THE ARMY
CORPS OF ENGINEERS
CONCORD, MASSACHUSETTS

WESTON SOLUTIONS
WOODLOT ALTERNATIVES, INC.

1.5 MILE REMOVAL ACTION – PHASE I/II TRANSITION
ENVIRONMENTAL REMEDIATION CONTRACT (SSERC)
GE/HOUSATONIC RIVER SITE
PITTSFIELD, MASSACHUSETTS
TRANSITION AREA
REVEGETATION RESTORATION DETAILS

Sheet reference number:
2103
17 OF 17

M:\Design\DWG\ACOE\SSERC\Phase_0.5mi\TRANSITION DESIGN DRAWINGS\vendstr drawings\Final Drawings\2103.dwg, cynurt, 04/15/2003 10:43:15 AM, plotnab, 1:1