St Johns County, Fl Biodiesel Facility

Myths and Challenges

RJ Inman, Biodiesel Department
(904) 209-0291

EPA Biodiesel Workshop – October 14 - 15, 2009

Background

- St Johns County population is 181,000 & covers 609 sq miles
- St Johns County started their biodiesel production facility in 2005
- St Johns County collects waste vegetable oil from restaurants, schools, correctional facilities, and homes
- St Johns County uses biodiesel in emergency vehicles, commuter buses, and other County vehicles
- St Johns County has saved $$ using biodiesel versus purchasing ultra low sulfur diesel

5 Myths Regarding Biodiesel

- The raw feedstock for making biodiesel is hard to find and is expensive to purchase – False
- Biodiesel voids manufacturers vehicle warrantees – False
- Biodiesel is not environmental friendly and pollutes the air and water – False
- Biodiesel is more expensive to produce than to purchase ultra low sulfur diesel at the pump – False
- All biodiesel is the same – False

The raw feedstock for making biodiesel is hard to find and is expensive to purchase – False

St Johns County collects waste vegetable oil (WVO) from:

- 35 restaurants
- Local County Schools
- Residential drop off locations
- Correctional Facilities
- Naval Air Station

St Johns County picks up the WVO for free as a community service

Pretreatment of WVO to reduce free fatty acids and water content is necessary before making biodiesel

WVO Collection Vehicle

Vacuum Distillation System

Acid Esterification System

Biodiesel voids manufacturers vehicle warrantees – False

- Biodiesel has excellent lubricity characteristics and extends the life of the engine
- Manufacturers of vehicles will honor warrantees if B20 is used in vehicles that meet ASTM D 6751 specifications
- Since biodiesel acts as a cleaning agent fuel filters are changed after initial use of biodiesel

Biodiesel is not environmental friendly and pollutes the air and water – False

- Biodiesel is a cleaner burning fuel than ultra low sulfur diesel (reduces green house gasses)
- A County biodiesel facility associated with a Fats, Oils, & Grease (FOG) program at a publicly owned treatment works can reduce water pollution by reducing FOG related Sanitary Sewer Overflows (SSOs)
- According to EPA, 47% of SSOs caused by line blockage are FOG related episodes

Biodiesel is more expensive to produce than to purchase low sulfur diesel at the pump – False

- Biodiesel at St Johns County costs less than $2 per gallon to produce including labor & materials
- Over the past year, St Johns County has enjoyed a significant cost savings in its fuel budget, as a result of producing biodiesel fuel

All biodiesel is the same – False

- Biodiesel should meet ASTM specifications to ensure quality assurance and engine performance
- Biodiesel to meet ASTM D 6751specifications must meet 18 critical tests
- Producing ASTM D 6751 quality biodiesel at St Johns County is aided by the use of an automated touch screen computer system

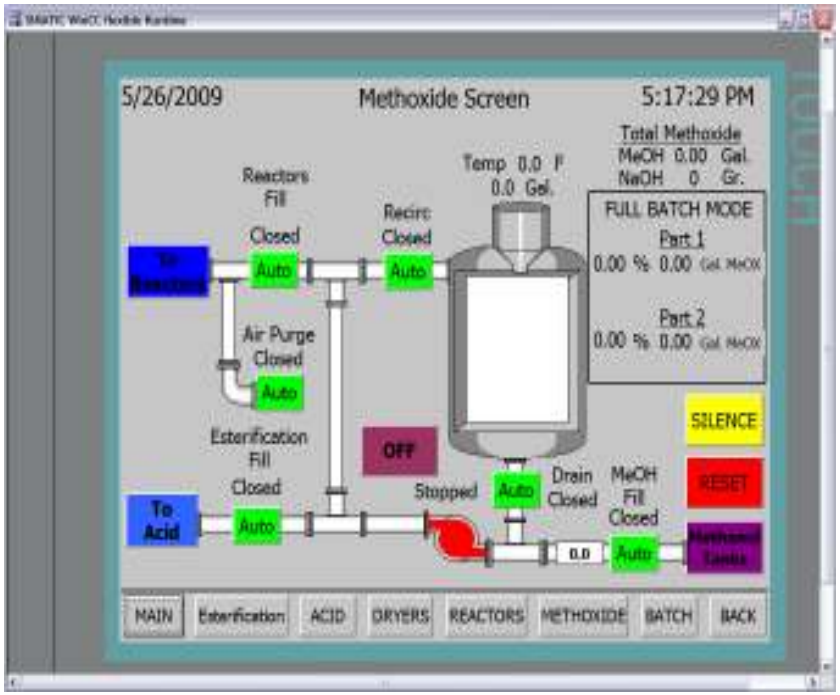

Bently

BTS NV
1711 Orbit Way, Bldg 2
Minden, NV 89423
TEL: 775-783-4660
FAX: 775-783-4648

Profile Code	SAINT-JOHN	Profile ID	5302
Attention Of	Ray Inman		
Company	Saint Johns County Biofuels Dept		
End User			

Taken	11-Sep-2009	Tested	24-Sep-2009	Sample 17269	Unit ID SAINT-JOHN-09-15-09
Entered	15-Sep-2009	Reported	24-Sep-2009	Lab Batch 67	Sample Details
Test Pkg	6751			Fuel Type	BioDiesel Fuel

Sample Note:

Test Name	Test Method	Limit	Result	Status
Free Glycerin (mass %)	ASTM D6584	MAX 0.020	0.002	PASS
Monoglycerides (mass %)	ASTM D6584	N/A	0.033	N/A
Diglycerides (mass %)	ASTM D6584	N/A	0.060	N/A
Triglycerides (mass %)	ASTM D6584	N/A	0.100	N/A
Total Glycerin (mass %)	ASTM D 6584	MAX 0.240	0.195	PASS
Flash Point, Closed Cup (°C)	ASTM D93	MIN 130	121.5	PASS
Methanol Content (wt %)	EN 14110	MAX 0.20	0.022	PASS
Phosphorous (ppm)	ASTM D4951	MAX 10	0	PASS
Calcium + Magnesium (ppm)	EN 14538	MAX 5	CA-0+MG-0=0	PASS
Sodium + Potassium (ppm)	EN 14538	MAX 5	NA-0+K-2=2	PASS
Water & Sediment (vol %)	ASTM D2709	MAX 0.050	0	PASS
Sulfur, by UV (ppm)	ASTM D5453	MAX 15	7.76	PASS
TAN (mg KOH/g)	ASTM D664	MAX 0.50	0.24	PASS
Viscosity @ 40° C (cSt)	ASTM D445	1.9 - 6.0	4.92	PASS
Oxidation Stability by Rancimat (hrs)	EN14112	MIN 3.00	3.18	PASS
Dist. Temp., 90% Recovery (°C)	ASTM D1160	MAX 360	356	PASS
Cetane Number	ASTM D613	MIN 47	56	PASS
Cloud Point (°C)	ASTM D2500	N/A	0	N/A
Cold Soak Filterability, Time (sec)	ASTM D6751 Annex A1	MAX 360	44	PASS
Sulfated Ash (wt %)	ASTM D874	MAX 0.020	<0.005	PASS
Carbon Residue, MicroMethod 100% (wt %)	ASTM D4530	MAX 0.050	< 0.05	PASS
Copper Corrosion, 3h @ 50°C (rating)	ASTM D130	MAX 3A	1a	PASS

* If Flash Point is between 93 °C and 129 °C, Methanol Content (MC) must be tested. MC result must be lower than 0.20 (wt%) to PASS.

CERTIFICATE OF ANALYSIS
Analysis Meets Testing Requirements of ASTM D 6751.

Waste Vegetable Oil

Finished B100 Biodiesel

Challenges

- Funding Biodiesel Projects
  - St Johns County used funds from the fuel Department diesel budget to build the biodiesel facility
  - Funds are available through State Revolving Fund programs when biodiesel facility is associated with a publicly owned treatment works (POTW) FOG program
  - Funds are available through the Green Initiative under the American Recovery Reinvestment Act of 2009

- Educating the public and community leaders that using biodiesel is a step in the right direction – reduces county fuel costs, reduces air & water pollution, and our dependence on foreign oil

St Johns County Awards

IDEA / INNOVATION OF THE YEAR
FALL 2007

ST. JOHN'S COUNTY, FLORIDA
BIODIESEL

Biodiesel is the name of a clean burning alternative fuel, produced from domestic, renewable resources. Biodiesel contains no petroleum but it can be blended at any level with petroleum diesel to create a biodiesel blend. It can be used in compression-ignition (diesel) engines with little or no modifications. Biodiesel is simple to use, biodegradable, nontoxic, and essentially free of sulfur and aromatics.

Biodiesel is made through a chemical process called transesterification whereby the glycerin is separated from the fat or vegetable oil. The process leaves behind two products: methyl esters (the chemical name for biodiesel) and glycerin, a valuable byproduct usually used in soaps and other products.

Through the efforts of all involved in creating the first site within the FLAGFA organization, St. John's County began producing their own biodiesel during a time when the efficiency of biodiesel was still unknown to many. It was a risk that netted them not only a savings in the cost of fuel but a community commitment to support their efforts to become less dependent on fossil fuels and foreign oil. St. John's County has not only lent their expertise to those that have since looked into or have established their own sites, but they have also shared with our organization the marketing skills needed to make the venture successful. Strategic planning, community involvement and marketing are all important elements to success.

FLAGFA CONGRATULATES ST. JOHNS COUNTY, WINNER OF "THE IDEA AND INNOVATION OF THE YEAR" FALL, 2007.

Joe Stephenson, Director of Public Works, St Johns County receives the Fall 2007 "Idea/Innovation of the Year Award" from the Florida Association of Government Fleet Administrators (FLAGFA) for the St. John's County, Florida biodiesel facility

St Johns County Awards

United States
Environmental Protection Agency

2008 National 1st Place
Clean Water Act Recognition Award
for Pretreatment Program Excellence
0-5 SIUs

Presented to

St. Johns County Utilities Pretreatment Program
St. Augustine, Florida

UNITED STATES ENVIRONMENTAL PROTECTION AGENCY

October 20, 2008

Stephen L. Johnson
Administrator

St Johns County receiving the EPA 2008 National & Regional Clean Water Act Recognition Award for Pretreatment Program Excellence 0-5 Significant Industrial Users

Questions?