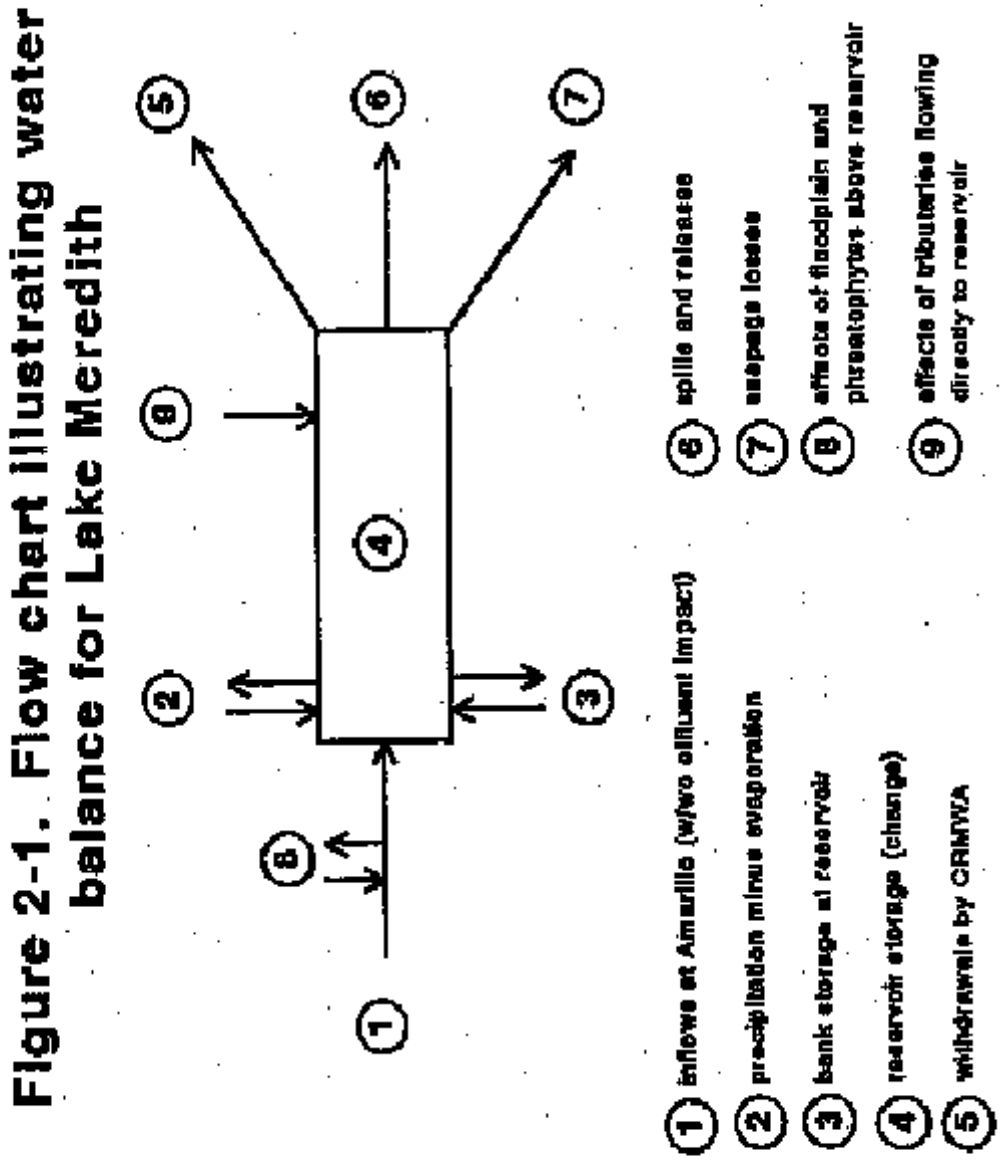

Figure 3-15. Flow chart with water balance (Texas reservoir)