Statement of Basis

FACILITY:	**Wesco Operating, Inc. – Maverick Springs**
PERMIT NO:	WY-0000469
RESPONSIBLE OFFICIAL:	Robert Kirkwood
ADDRESS:	P.O. Box 1706
	Casper, WY 82602
PHONE:	(307) 265-5178, ext 16
PERMIT TYPE:	Minor Industrial (Renewal)

Change made after public notice to correct typographical errors or based on receipt of new information:

1. page 5, section 1.3.1, footnote b/. To correct a typographical error and ensure consistency of requirements throughout the permit, the word "quarterly" was replaced with "monthly".

2. page 6, section 1.4. In the draft permit as it was public noticed, the hazard screening requirement stated that a sample shall be collected "Within 30 days of the effective date of this permit…" Similarly, the analytical report was to be submitted "Within 90 days of the effective date of this permit…" Since the draft permit was put in public notice, EPA has become aware that this facility may not discharge until an undetermined period of time after the effective date of the permit, potentially making these requirements impossible to meet. The language has been changed to state that a sample shall be collected "Within 30 days of the start of discharge," and the report shall be submitted "Within 90 days of the start of discharge." These changes to the permit do not reduce the stringency of the hazard screening requirement.

Background Information

This proposed permit authorizes the discharge of produced water from outfall 001 (latitude 43° 28' 16" N, longitude 108° 58' 11" W.) at the oil production wastewater treatment facilities for the Wesco Operating, Inc. – Maverick Springs oil production facility located in the SW 1/4 of the NW 1/4 of Section 26, Township 6 North, Range 2 West in Fremont County. This facility is within the exterior boundaries of the Wind River Indian Reservation. This permit is a re-opening of NPDES Permit Number WY-0000469, which expired and allowed to lapse on March 31, 2002 because the wells were shut in.

Produced oil, water, and gas are separated using flotation treatment consisting of a free water knockout, heater treater, skim tanks, and settling pits. A line diagram of the facility is included in Attachment A.

Receiving Waters

The discharge from this facility will enter a tributary to Five Mile Creek. The discharge provides wildlife and stock watering opportunities. In addition, aquatic communities have developed in this ephemeral drainage, which are dependent upon the flow of this produced water.

The Northern Arapaho and the Eastern Shoshone Tribes have not adopted, and EPA has not approved, Tribal water quality standards for waters within the Wind River Reservation. Therefore, there are no water quality criteria to base development of water quality based limits. Permit Condition 4.15.1 includes a reopener provision under which the permit may be reopened and modified, as appropriate, if Tribal Water Quality Standards are adopted and approved by EPA. There are, however, applicable federal effluent limitation guidelines as discussed below.

Monitoring Data

A summary of monitoring data from the DMRs submitted under the previous operator for the period June 1997 to December 1999 is presented in Attachment B.

Effluent Limitations

These permit activities are covered under the effluent guideline for onshore oil and gas operations, subject to the Oil and Gas Extraction Point Source Category (40 CFR Part 435). The Oil and Gas Extraction Point Source Category Subpart C - Onshore Subcategory establishes the effluent limitation for produced water from Onshore operations as "No Discharge" [40 CFR 435.32 (a)]. However, Subpart E - Agricultural and Wildlife Water Use Subcategory allows the discharge of produced water from facilities west of the 98th meridian for use in agricultural and wildlife propagation. The effluent guideline further requires " . . . that the produced water is of good enough quality to be used for wildlife or livestock watering or other agricultural uses and that the produced water is actually put to such use during periods of discharge."

The following effluent limitations will be required for this facility for outfall 001:

Effluent Characteristic	Effluent Limitation		
	30-Day Average a/	7-Day Average a/	Daily Maximum a/
Specific Conductance, µmhos/cm			7500
Total Dissolved Solids, mg/L			5000
Chlorides, mg/L			2000
Sulfates, mg/L			3000
Total Radium 226, pCi/L			60
Oil and Grease, mg/L			10 b/
The pH of the discharge shall not be less than 6.5 nor greater than 9.0 at any time.			
The discharge shall be free from substances in amounts which would cause a visible sheen or visible deposits in the receiving water or adjoining shoreline.			
No chemicals which contain toxic substances listed pursuant to Section 307 (a) of the Act shall be added to the discharge at levels which exceed the notification criteria specified under Conditions 3.9 and 3.10 of this permit.			
There shall be no addition of hexavalent chromium.			
There shall be no discharge of floating solids or visible foam in other than trace amounts.			
The discharge shall not present a hazard to humans, wildlife, or livestock.			

a/ See Definitions, Part 1.1. of the permit for definition of terms.

b/ A monthly visual observation is required. If a visible sheen is detected, a grab sample shall be taken and analyzed immediately. The concentration of oil and grease shall not exceed 10 mg/L in any sample.

These limits are based on EPA's Best Professional Judgment to implement the requirements of the Oil and Gas Extraction Point Source Category Subpart C - Onshore Subcategory and Subpart E - Agricultural and Wildlife Water Use Subcategory [40 CFR 435] and consideration of: 1) current uses of the receiving waters; 2) the current desires of the Tribes to have similar requirements on the Wind River Reservation and in the State of Wyoming; and 3) State of Wyoming Chapter 2.H - Surface Discharge of Water Associated with the Production of Oil and Gas requirements. These limits were contained in the previous permit except for Specific Conductance. This new limit will be effective immediately. This limit was included/added to protect the agricultural and wildlife water of Subpart E - Agricultural and Wildlife Water Use Subcategory [40 CFR 435].

The upper pH limit for this permit was increased from 8.5 to 9.0. This decision was based on the presence of naturally high pH waters in the area. WREQC concurred with this change.

While EPA's National Water Quality Criteria are not directly applicable to the receiving waters, it should be noted that the quality of the produced water discharges may not meet these National Water Quality Criteria for aquatic life protection. However, the water should be of necessary quality for use by livestock and wildlife. The WREQC and Joint Business Council (JBC) are moving forward to develop and implement site-specific standards. EPA is including a permit re-opener clause and additional effluent monitoring to screen for hazardous/toxic constituents to develop data for future water quality based limits (see discussion under the "Hazard Screening Requirements").

Self-Monitoring Requirements

The following self-monitoring requirements are included in this permit for outfall 001:

Effluent Characteristic	Frequency	Sample Type a/
Total Flow, mgd b/	Monthly	Instantaneous
Specific Conductance, µmhos/cm	Once per six months d/	Grab
Total Dissolved Solids, mg/L	Once per six months d/	Grab
Chlorides, mg/L	Once per six months d/	Grab
pH, standard units	Once per six months d/	Grab
Oil and grease, visual c/	Monthly c/	Visual
Sulfates, mg/L	Once per six months d/	Grab
Total Radium 226, pCi/L	Once per six months d/	Grab

a/ See Definitions, Part 1.1., for definition of terms.

b/ Flow measurements of effluent volume shall be made in such a manner that the permittee can affirmatively demonstrate that representative values are being obtained. The average flow rate (in million gallons per day) during the reporting period and the maximum flow rate observed (in mgd) shall be reported.

c/ A monthly visual observation is required. If a visible sheen is detected, a grab sample shall be taken and analyzed immediately. The concentration of oil and grease shall not exceed 10 mg/L in any sample.

d/ Sampling events shall occur at an interval of not less than three months and not more than six months.

Hazard Screening Requirements

EPA will include in the permit a re-opener clause and additional effluent monitoring to screen for hazardous/toxic constituents and to develop data for future water quality based limits, protective of these unique aquatic communities. Within 30 days of the start of discharge, a sample shall be collected from the permitted outfall and analyzed for the constituents specified below, at the required detection limits. Within 90 days of the start of discharge, an analytical report for these pollutants shall be submitted to the US EPA with a copy provided to the Wind River Environmental Quality Commission. This report shall include the data and information specified in Section 2.6 of this permit. Based upon the results of this screening, this permit may be reopened and effluent limits and/or monitoring requirements established for constituents that are present at a level of concern.

Parameter	Required Detection Limits and Required Units
Arsenic, Total	1 µg/L
Aluminum, Total Recoverable	50 µg/L
Ammonia, mg/L	50 µg/L
Cadmium, Total Recoverable	5 µg/L
Chromium (total), mg/L	5 µg/L
Copper, Total Recoverable	5 µg/L
Iron, Total Recoverable	50 µg/L
Lead, Total Recoverable	2 µg/L
Manganese, Total Recoverable	50 µg/L
Mercury, Total Recoverable	0.001 µg/L
Nickel, Total Recoverable	5 µg/L
Zinc, Total Recoverable	5 µg/L
Hardness, Total	10 mg/L as CaCO3
Uranium, Total Recoverable	5 µg/L
Gross Alpha and Beta Radiation	0.2 pCi/L
Dissolved Oxygen	1 mg/L
Selenium	0.05 mg/L
Boron	1 mg/L
Chemical Oxygen Demand	3 mg/L
Sulfide, mg/L	0.2 mg/L
Benzene, mg/L	0.005 mg/L
Ethylbenzene, mg/L	0.05 mg/L
Toluene, mg/L	0.05 mg/L
Xylene, mg/L	0.05 mg/L

Reporting Requirements

The facility is required to report effluent data semi-annually on a discharge monitoring report. If no discharge occurred during that period, the report is to be marked "no discharge".

Reopener Conditions

EPA will include in the permit reopener clauses for Water Quality Standards adoption and hazard screening. Permit Condition 4.15.1 includes a reopener provision under which the permit may be reopened and modified, as appropriate, if Tribal Water Quality Standards are adopted and approved by EPA. Permit Condition 4.16. includes a reopener provision under which the permit may be reopened and modified, as appropriate, if constituents are present that constitute a hazard.

Colleen Gillespie
Terry Griffith
U.S. EPA
June 27, 2007

Permit Reviewed by:
Robert Shankland, SEE, NOWCC, Wastewater Unit

This permit was published for public notice on August 1, 2007. Comments received and addressed below: Colleen Gillespie, U.S. EPA Wastewater Unit, September 24, 2007.

This permit was modified after public notice to reflect new information received and correct an in consistency.
Colleen Gillespie, U.S. EPA Wastewater Unit, November 15, 2007.

Response to comments, Wesco Operating, Inc (WY-0000469)

Comments were received from the Wyoming Department of Environmental Quality. A summary of comments and responses to those comments are given below.

1. **It does not appear that the permit establishes effluent limits that are protective of aquatic life.**
   As noted in the statement of bases, the Northern Arapaho and the Eastern Shoshone Tribes have not adopted and EPA has not approved Tribal water quality standards for waters within the Wind River Reservation. Therefore, there are no water quality criteria to base development of water quality based limits, including protection of aquatic life. The Tribes are currently working to finalize water quality standards for tribal waters. Upon approval, EPA will ensure that permits reflect approved water quality standards.
2. **The WDEQ requested that it be sent copies of DMRs for this facility.**
   Data for these permittees is entered into PCS and will be entered into ICIS-NPDES. WDEQ may review data by accessing the database. Alternatively, WDEQ can request copies from EPA Region 8.

Attachment A

Line Drawing of Proposed Wesco Operating, Inc. Maverick Springs Facility

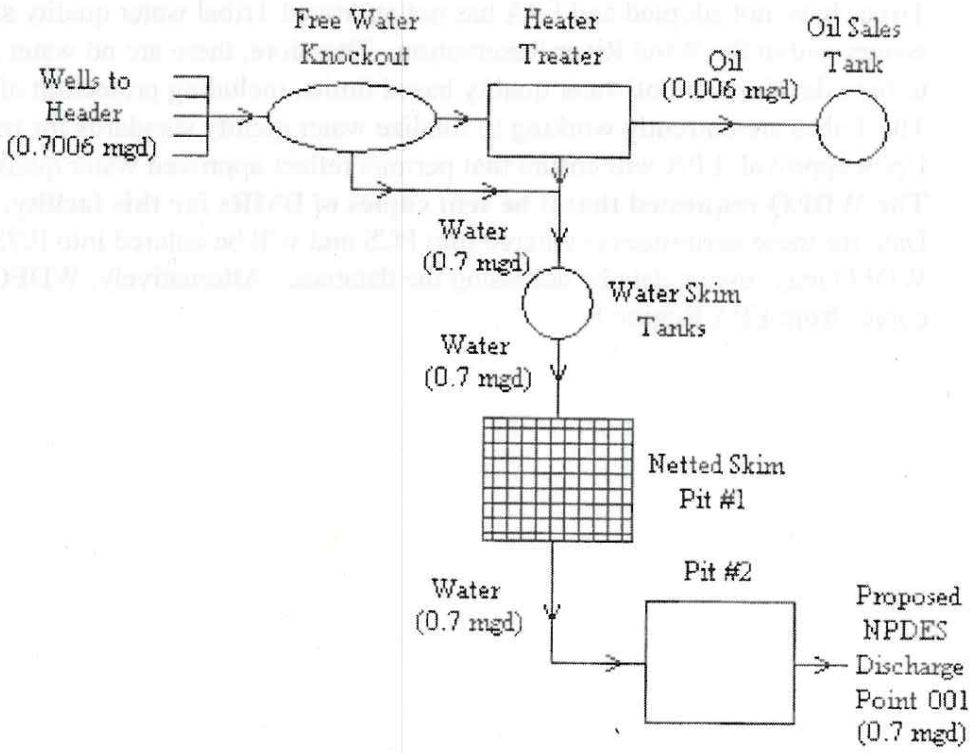

Attachment B

WY0000469 Outfall 001

Parameter	Limit	Measurement	Measurement Date
CONDUCTIVITY	Monitor	4.4 - 2460 umho/cm	6/30/97 - 12/31/01
SULFATE (AS S)	3,000 mg/L	500-1080 mg/L	6/30/97 - 12/31/01
PH	6.5-8.5 SU	6.8 - 8.2 SU	6/30/97 - 12/31/01
OIL & GREASE	10 mg/L	<1.0 - 1.4 mg/L	6/30/97 - 12/31/01
CHLORIDE	2,000 mg/L	12.6 - 467 mg/L	6/30/97 - 12/31/01
RADIUM 226, TOTAL	60 pCi/L	2.1 - 13.1 pCi/L	6/30/97 - 12/31/01
FLOATING SOLIDS OR VISIBLE	Visual	No Observed	6/30/97 - 12/31/01
FLOW, IN CONDUIT OR THRU TREA	Monitor	0.61 - 18.793 mgd	6/30/97 - 12/31/01
TOTAL DISSOLVED SOLIDS	5,000 mg/L	1270 - 1930 mg/L	6/30/97 - 12/31/01