GENERAL INSTRUMENT SYMBOLS

- FIELD MOUNTED INSTRUMENT
- SINGLE INSTRUMENT HOUSING CONTAINING TWO (OR MORE) INSTRUMENTATION FUNCTIONS
- CONTROL INTERLOCK FUNCTION, SEE TREATMENT SYSTEM SPECIFICATION 11430 FOR SPECIFIC FUNCTION

TAG NUMBERS AND ADDITIONAL DESIGNATIONS

pH ← SEE INSTRUMENT FUNCTIONAL DESIGNATIONS AND ABBREVIATIONS.

LINE SYMBOLS

- MAJOR PROCESS PIPING OR FLOW CHANNEL
- REDUCER
- FLOW ARROW FOR PRIMARY PROCESS FLOW
- FLOW ARROW FOR ADDITIONAL PROCESS PIPING
- I-3 — PROCESS LINE GOING TO ANOTHER SHEET; MATCH SHEET NO. IDENTIFIER
- I-2 — PROCESS LINE COMING FROM ANOTHER SHEET
- PIPE MATERIAL CHANGE
- PROCESS LINES CROSSING (NOT CONNECTED)
- ELECTRIC SIGNAL
- A — AIRLINE

TAG NUMBERS
MEANINGS OF IDENTIFICATION LETTERS

LETTER	FIRST LETTER: MEASURED OR INITIATING VARIABLE	FIRST LETTER: MODIFIER	SUCCEEDING LETTERS: READOUT OR PASSIVE FUNCTION	SUCCEEDING LETTERS: OUTPUT FUNCTION	SUCCEEDING LETTERS: MODIFIER
A	ANALYSIS		ALARM		
B	BURNER, COMBUSTION		USER'S CHOICE	USER'S CHOICE	USER'S CHOICE
C	CONDUCTIVITY (ELECTRICAL)			CONTROL	
D	DENSITY (MASS) OR SPECIFIC GRAVITY	DIFFERENTIAL			
E	VOLTAGE (EMF)		PRIMARY ELEMENT		
F	FLOW RATE	RATIO (FRACTION)			
G	USER'S CHOICE		GLASS		
H	HAND (MANUALLY INITIATED)				HIGH
I	CURRENT (ELECTRICAL)		INDICATE		
J	POWER	SCAN			
K	TIME OR TIME-SCHEDULE	TIME RATE OF CHANGE		CONTROL STATION	
L	LEVEL		LIGHT (PILOT)		LOW
M	MOISTURE OR HUMIDITY	MOMENTARY			MIDDLE OR INTER-MEDIATE
N	USER'S CHOICE		USER'S CHOICE	USER'S CHOICE	USER'S CHOICE
O	OXIDATION/REDUCTION		ORIFICE (RESTRICTION)		
P	PRESSURE OR VACUUM		POINT (TEST CONNECTION)		
Q	QUANTITY	INTEGRATE OR TOTALIZE	INTEGRATE OR TOTALIZE		
R	RADIATION		RECORD OR PRINT		
S	SPEED OR FREQUENCY	SAFETY		SWITCH	
T	TEMPERATURE			TRANSMIT	
U	MULTIVARIABLE		MULTIFUNCTION	MULTIFUNCTION	MULTIFUNCTION
V	VIBRATION			VALVE, DAMPER, OR LOUVER	
W	WEIGHT OR FORCE		WELL		
X	UNCLASSIFIED		UNCLASSIFIED	UNCLASSIFIED	UNCLASSIFIED
Y	EVENT, STATE, OR PRESENCE			RELAY OR COMPUTE	
Z	POSITION, DIMENSION			DRIVE, ACTUATOR OR UNCLASSIFIED FINAL CONTROL ELEMENT	

INTERFACE SYMBOLS

NOTE: REFER TO DETAILED SYSTEM SPECIFICATIONS FOR FUNCTIONAL DESCRIPTION. ALSO SEE I/O SCHEDULE FOR COMPLETE INPUT AND OUTPUT LISTING.

- PROGRAMMABLE LOGIC CONTROLLER (PLC) CONTROL SYSTEM FUNCTION BLOCK
- SYSTEM I/O INTERFACE. DIRECTION OF ARROW DENOTES WHETHER INPUT OR OUTPUT. HOLLOW ARROW INDICATES DISCRETE SIGNAL, FILLED ARROW INDICATES ANALOG SIGNAL.
- DIGITAL SYSTEM I/O INTERFACE DIRECTION OF ARROW DENOTES WHETHER INPUT OR OUTPUT

FUNCTION DESIGNATIONS AND ABBREVIATIONS

INSTRUMENT DESIGNATIONS

pH — pH CELL

UTILITY SUPPLY ABBREVIATIONS

- ES — ELECTRIC SUPPLY
- WS — WATER SUPPLY

HAND SWITCH DESIGNATIONS

HOA — HAND-OFF-AUTO

VALVE AND GATE ACTUATOR SYMBOLS

- PRESSURE SAFETY VALVE
- NO SYMBOL — MANUALLY (HAND) OPERATED

PROCESS DEVICE SYMBOLS

- PRIMARY FLOW ELEMENT: VENTURI TUBE
- (M) FLOW TOTALIZING METER
- POSITIVE DISPLACEMENT TYPE FLOWMETER
- VALVE: GLOBE, GATE, OR OTHER IN-LINE TYPE NOT OTHERWISE IDENTIFIED
- VALVE: EXISTING OR FUTURE
- VALVE: FLOW CONTROL VALVE OR ISOLATION GATE
- VALVE: ROTARY BALL TYPE
- VALVE: CHECK
- STRAINER
- UNION
- FLOW METER
- SUBMERSIBLE SUMP PUMP
- SUBMERSIBLE RECOVERY WELL PUMP
- (VS) HORIZONTAL CENTRIFUGAL PUMP VS DENOTES: VARIABLE SPEED
- BLOWER
- MIXER
- PROPORTIONING OR METERING PUMP
- (M) MOTOR
- (MS) MOTOR STARTER
- DUCT HEATER

THE FOLLOWING ADDITIONAL DESIGNATIONS MAY BE UTILIZED ADJACENT TO SOME VALVE OR GATE SYMBOLS.

- NC — NORMALLY CLOSED
- FC — FAILS CLOSED
- FO — FAILS OPEN
- FIP — FAILS IN LAST POSITION

INTERLOCK TABLE FOR DRAWINGS GP-3 TO GP-5

INTERLOCK	SYSTEM ACTION	CONTROL PANEL ACTION
0	NONE	WELL VAULT LAH PILOT LIGHT ILLUMINATES. DIAL OUT INITIATES.
1	SHUTS DOWN RECOVERY WELL PUMP	RECOVERY WELL LALL PILOT LIGHT ILLUMINATES. DIAL OUT INITIATES.
2	SHUTS DOWN ALL PROCESS MOTORS EXCEPT SUMP PUMP (P-100) SHUTS OFF DUCT HEATER	BUILDING SUMP LAHH PILOT LIGHT ILLUMINATES. DIAL OUT INITIATES.
3	SHUTS DOWN RECOVERY WELL PUMP	INFLUENT TANK LAHH PILOT LIGHT ILLUMINATES. DIAL OUT INITIATES.
4	SHUTS DOWN ALL PROCESS PUMP MOTORS EXCEPT: RECOVERY WELL PUMP; SUMP PUMP (P-100); EFFLUENT PROCESS TANK PUMP (P-1500A, P-1500B). INITIATES AIR STRIPPER BLOWER (B-1000) AND DUCT HEATER OFF DELAY TIMER.	INFLUENT TANK LALL PILOT LIGHT ILLUMINATES. DIAL OUT INITIATES.
4A	SHUTS DOWN ALL PROCESS PUMP MOTORS EXCEPT: SUMP PUMP (P-100); EFFLUENT PROCESS TANK PUMP (P-1500). INITIATES AIR STRIPPER BLOWER (B-1000) AND DUCT HEATER OFF DELAY TIMER.	INFLUENT BAG FILTER (F-500-1) PAH PILOT LIGHT ILLUMINATES. DIAL OUT INITIATES.
5	RESERVED	
5A	RESERVED	
6	RESERVED	
6A	RESERVED	
7	SHUTS DOWN ALL PROCESS PUMP MOTORS EXCEPT: SUMP PUMP (P-100); EFFLUENT PROCESS TANK PUMP (P-1500). INITIATES AIR STRIPPER BLOWER (B-1000) AND DUCT HEATER OFF DELAY TIMER.	SEQUESTERING AGENT TANK LALL PILOT LIGHT ILLUMINATES. DIAL OUT INITIATES.
7A	NONE	SEQUESTERING AGENT TANK LALL PILOT LIGHT ILLUMINATES. DIAL OUT INITIATES.
8	SHUTS DOWN ALL PROCESS PUMP MOTORS EXCEPT: SUMP PUMP (P-100); EFFLUENT PROCESS TANK PUMP (P-1500); AIR STRIPPER EFFLUENT PUMP (P-1100A, P-1100B). INITIATES AIR STRIPPER BLOWER (B-1000) AND DUCT HEATER OFF DELAY TIMER.	AIR STRIPPER LAHH PILOT LIGHT ILLUMINATES. DIAL OUT INITIATES.
9	SHUTS DOWN ALL PROCESS PUMP MOTORS EXCEPT: SUMP PUMP (P-100); EFFLUENT PROCESS TANK PUMP (P-1500). SHUTS OFF DUCT HEATER.	AIR STRIPPER PAL PILOT LIGHT ILLUMINATES. DIAL OUT INITIATES.
9A	SHUTS DOWN ALL PROCESS PUMP MOTORS EXCEPT: SUMP PUMP (P-100); EFFLUENT PROCESS TANK PUMP (P-1500). SHUTS OFF DUCT HEATER.	AIR STRIPPER PAH PILOT LIGHT ILLUMINATES. DIAL OUT INITIATES.
10	SHUTS DOWN ALL PROCESS PUMP MOTORS EXCEPT: SUMP PUMP (P-100); EFFLUENT PROCESS TANK PUMP (P-1500). INITIATES AIR STRIPPER BLOWER (B-1000) AND DUCT HEATER OFF DELAY TIMER.	AIR STRIPPER LALL PILOT LIGHT ILLUMINATES. DIAL OUT INITIATES.
10A	NONE.	AIR STRIPPER BAG FILTER (F-500-2) PAH PILOT LIGHT ILLUMINATES. DIAL OUT INITIATES.
11	SHUTS DOWN ALL PROCESS PUMP MOTORS EXCEPT: SUMP PUMP (P-100); EFFLUENT PROCESS TANK PUMP (P-1500). SHUTS OFF DUCT HEATER.	EFFLUENT HOLDING TANK (T-1200) LAHH PILOT LIGHT ILLUMINATES. DIAL OUT INITIATES.
12	SHUTS DOWN EFFLUENT PROCESS TANK PUMP (P-1500).	EFFLUENT HOLDING TANK (T-1200) LALL PILOT LIGHT ILLUMINATES. DIAL OUT INITIATES.

GENERAL NOTES

1. IN GENERAL, THE P & ID SYMBOLS AND DEVICE IDENTIFICATIONS ARE BASED ON INSTRUMENT SOCIETY OF AMERICA STANDARD PRACTICE ISA-S5.1 (1988). SOME MODIFICATIONS, ADDITIONS, AND ALTERATIONS HAVE BEEN MADE AS NEEDED TO ACCOMMODATE THE PROJECT REQUIREMENTS.
2. ADDITIONAL CONTROL AND INTERLOCK REQUIREMENTS WHICH CAN BE MORE CLEARLY ILLUSTRATED ON SCHEMATIC DRAWINGS HAVE BEEN OMITTED FROM THE P & ID DRAWINGS. SOME PROCESS ITEMS, SUCH AS EQUIPMENT ISOLATION VALVES, BYPASS LINES, ETC., WHICH ARE NOT CRITICAL FOR AN UNDERSTANDING OF THE INSTRUMENTATION FUNCTIONS HAVE ALSO BEEN OMITTED.
3. THIS IS A GENERAL LEGEND SHEET. SOME SYMBOLS AND ABBREVIATIONS MAY NOT BE UTILIZED ON THIS SPECIFIC PROJECT.
4. PIPING AND EQUIPMENT LEGEND APPLIES TO P & ID SHEETS ONLY AND MAY DIFFER FROM LEGENDS FOR OTHER SHEETS.

Symbol	Description	Date	Approved
I	INTERMEDIATE (60%) DESIGN	12/02/03	
O	PRELIMINARY (30%) DESIGN	8/20/03	

Revisions

Date:	12/02/03
File No.	47118.0130
Drawing CADD Name:	GP-1
Contract Number:	
Designed By:	CW
Drawn By:	HW
Checked By:	CL
Reviewed By:	JT

UNITED STATES ENVIRONMENTAL PROTECTION AGENCY

BLACK & VEATCH *Special Projects Corp.*

GROUNDWATER EXTRACTION AND TREATMENT SYSTEM DESIGN
STANDARD CHLORINE OF DELAWARE

INSTRUMENTATION LEGEND AND ABBREVIATIONS

Sheet Reference Number:

GP-1

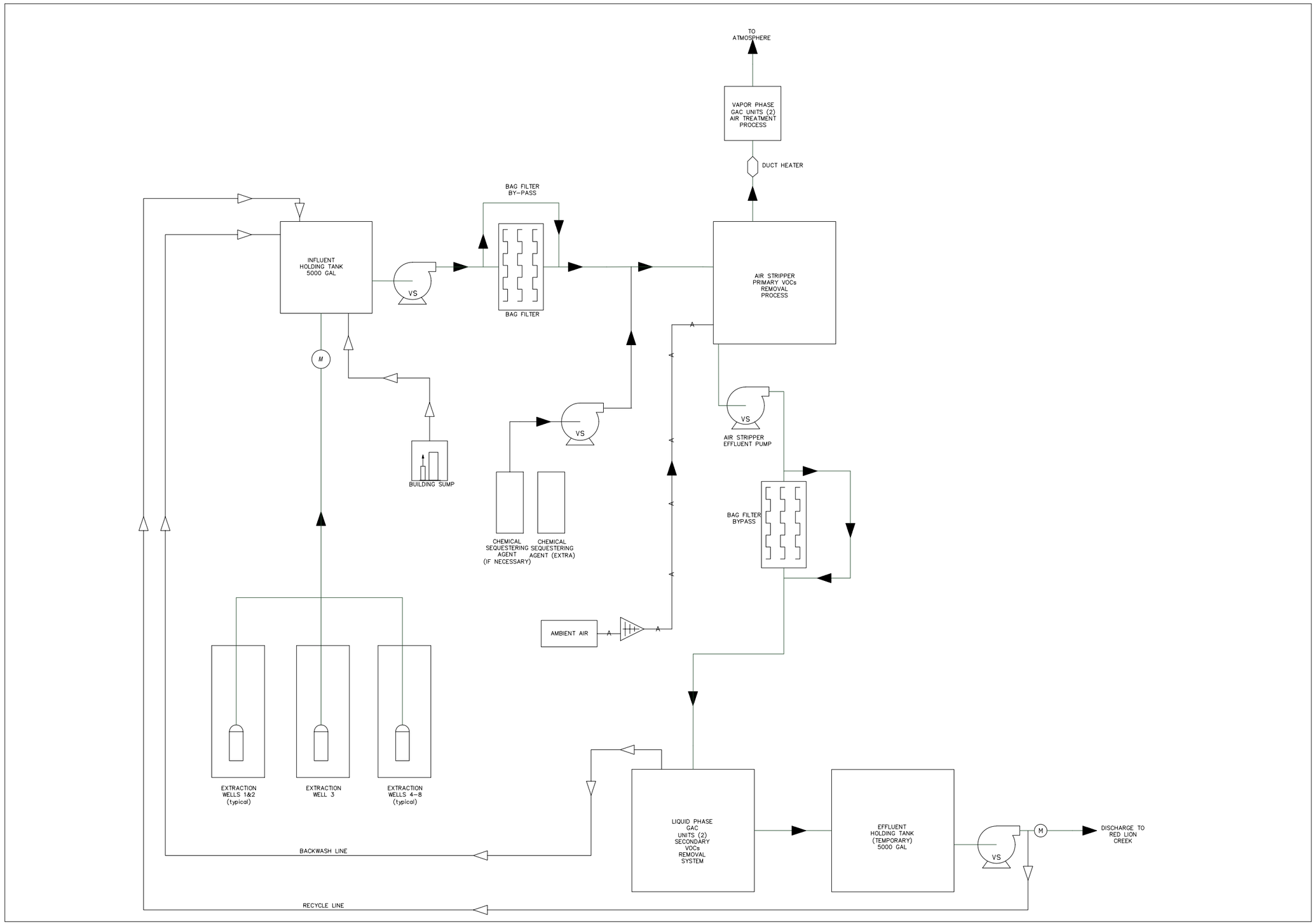

Symbol	Description	Date	Approved
1	INTERMEDIATE (60%) DESIGN	12/02/03	
0	PRELIMINARY (30%) DESIGN	08/20/03	

Revisions

Designed By: CW
Drawn By: HW
Checked By: CL
Reviewed By: JT
Date: 12/02/03
File No. 47118.0130
Drawing CADD Name: GP–2
Contract Number:

UNITED STATES ENVIRONMENTAL PROTECTION AGENCY

BLACK & VEATCH *Special Projects Corp.*

GROUNDWATER EXTRACTION AND TREATMENT SYSTEM DESIGN STANDARD CHLORINE OF DELAWARE

GENERAL PROCESS FLOW DIAGRAM

Sheet Reference Number:

GP–2

Date/Time, Plotted : 12/2/2003 2:38:44 PM

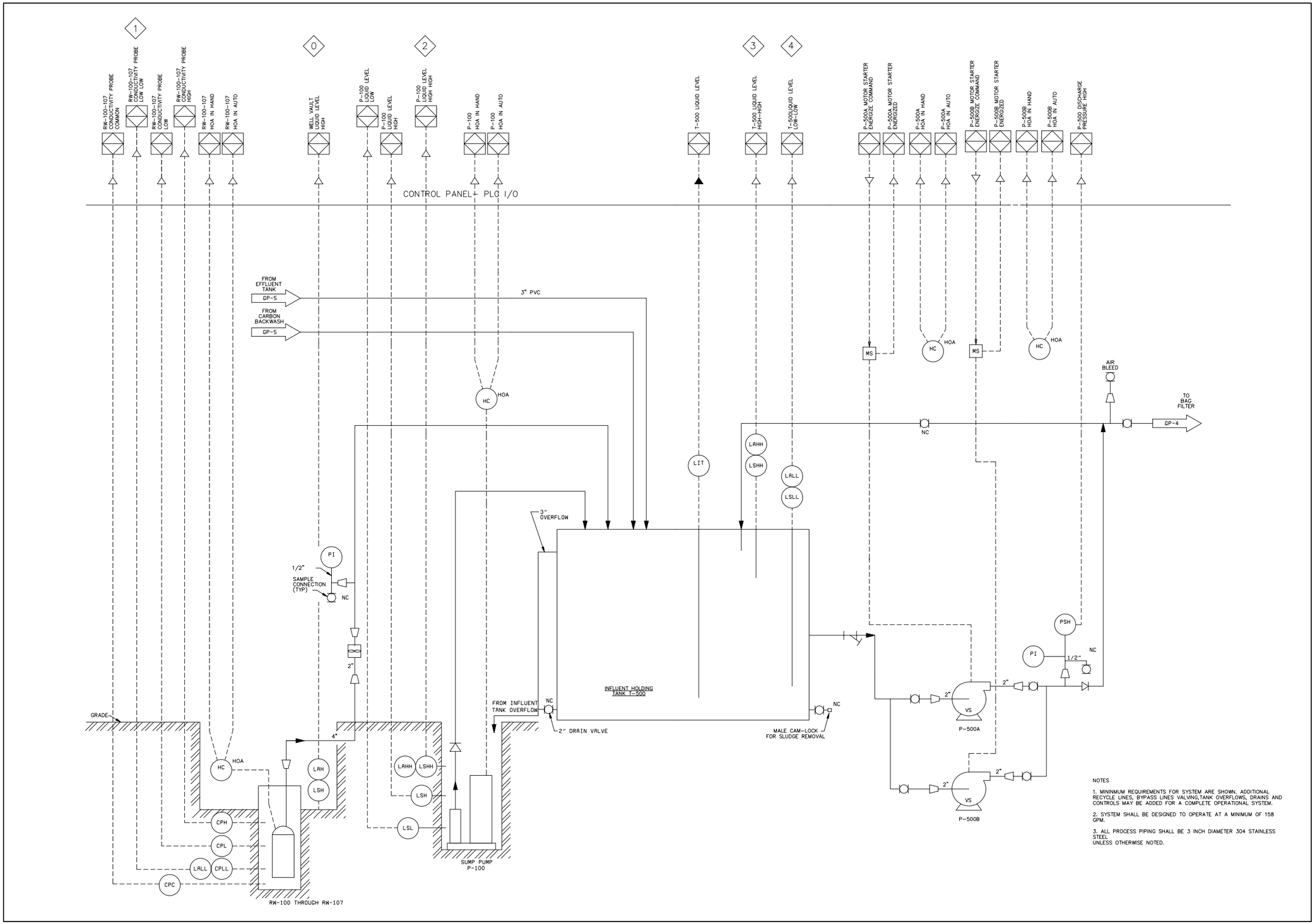

NOTES

1. MININMUM REQUIREMENTS FOR SYSTEM ARE SHOWN. ADDITIONAL RECYCLE LINES, BYPASS LINES VALVING,TANK OVERFLOWS, DRAINS AND CONTROLS MAY BE ADDED FOR A COMPLETE OPERATIONAL SYSTEM.

2. SYSTEM SHALL BE DESIGNED TO OPERATE AT A MINIMUM OF 158 GPM.

3. ALL PROCESS PIPING SHALL BE 3 INCH DIAMETER 304 STAINLESS STEEL
UNLESS OTHERWISE NOTED.

Symbol	Description	Date	Approved
1	INTERMEDIATE (60%) DESIGN	12/02/03	
0	PRELIMINARY (30%) DESIGN	08/20/03	

Revisions

Designed By: CW
Drawn By: HW
Checked By: CL
Reviewed By: JT
Date: 12/02/03
File No. 47118.0130
Drawing CADD Name: GP-3
Contract Number:

UNITED STATES ENVIRONMENTAL PROTECTION AGENCY

BLACK & VEATCH *Special Projects Corp.*

GROUNDWATER EXTRACTION AND TREATMENT SYSTEM DESIGN STANDARD CHLORINE OF DELAWARE

TREATMENT SYSTEM P & ID

Sheet Reference Number:

GP-3

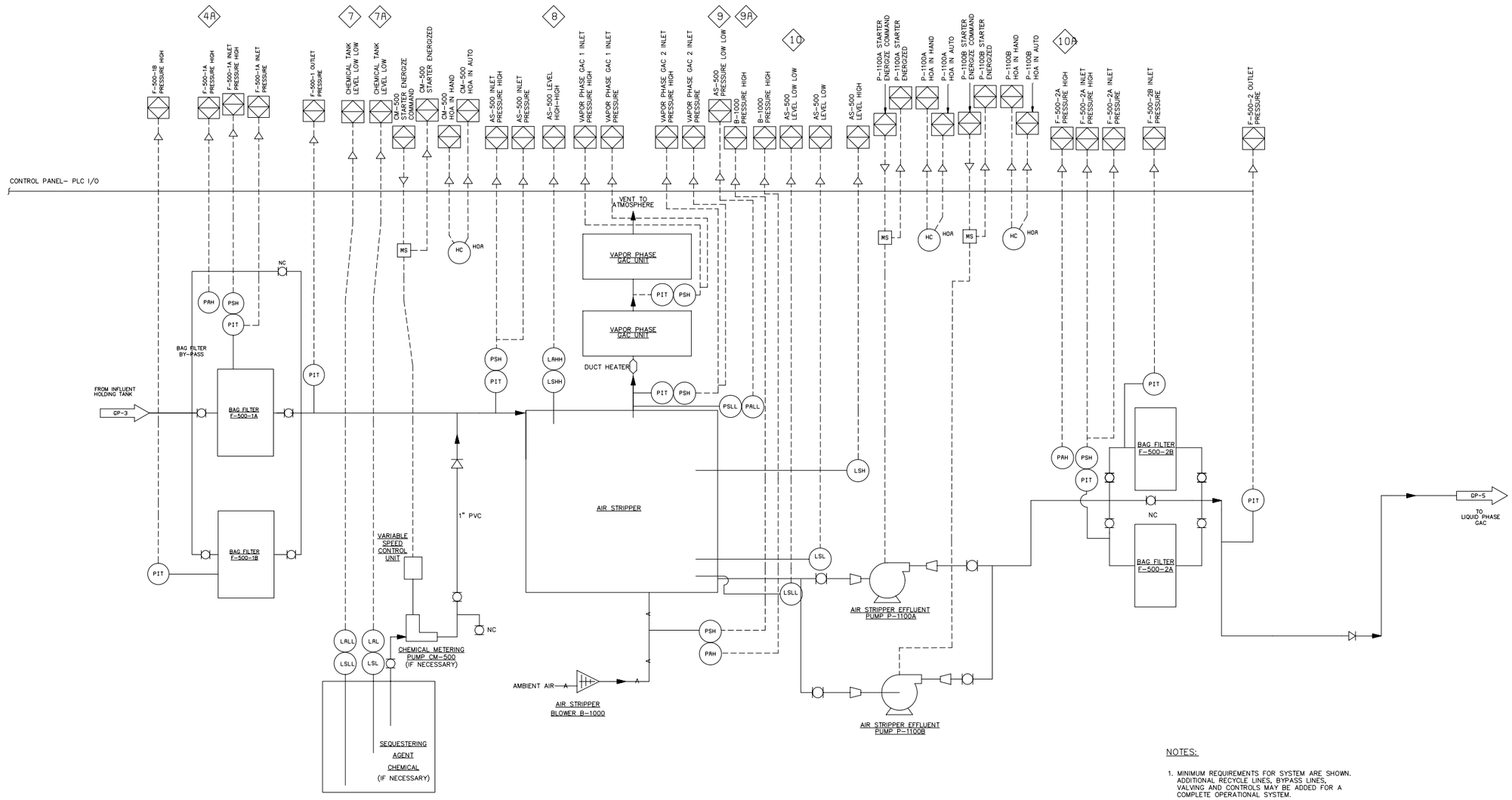

NOTES:

1. MINIMUM REQUIREMENTS FOR SYSTEM ARE SHOWN. ADDITIONAL RECYCLE LINES, BYPASS LINES, VALVING AND CONTROLS MAY BE ADDED FOR A COMPLETE OPERATIONAL SYSTEM.
2. SUBCONTRACTOR TO PROVIDE DETAILED DESIGN AND CONTROLLER INTERFACES FOR AIR STRIPPER.
3. ALL PROCESS PIPING SHALL BE 3 INCH DIAMETER 304 STAINLESS STEEL UNLESS OTHERWISE NOTED.

Date/Time, Plotted : 12/2/2003 10:02:44 AM

Symbol	Description	Date	Approved
1	INTERMEDIATE (60%) DESIGN	12/02/03	
0	PRELIMINARY (30%) DESIGN	08/20/03	

Revisions

Designed By: CW
Date: 12/02/03
Drawn By: HW
File No. 47118.0130
Checked By: CL
Drawing CADD Name: GP-4
Reviewed By: JT
Contract Number:

UNITED STATES ENVIRONMENTAL PROTECTION AGENCY

BLACK & VEATCH Special Projects Corp.

GROUNDWATER EXTRACTION AND TREATMENT SYSTEM DESIGN STANDARD CHLORINE OF DELAWARE

TREATMENT SYSTEM P & ID

Sheet Reference Number:

GP-4

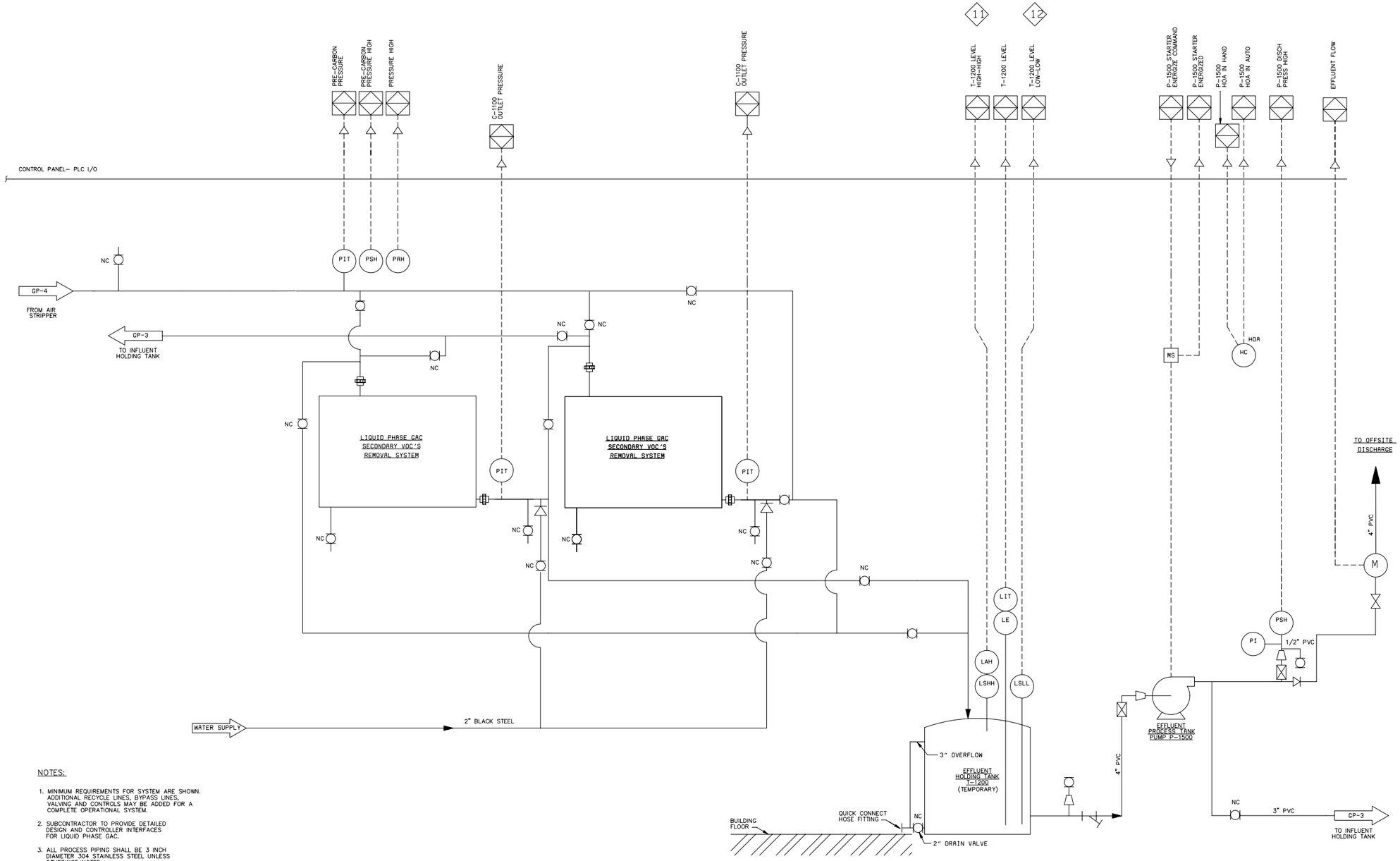

NOTES:

1. MINIMUM REQUIREMENTS FOR SYSTEM ARE SHOWN. ADDITIONAL RECYCLE LINES, BYPASS LINES, VALVING AND CONTROLS MAY BE ADDED FOR A COMPLETE OPERATIONAL SYSTEM.
2. SUBCONTRACTOR TO PROVIDE DETAILED DESIGN AND CONTROLLER INTERFACES FOR LIQUID PHASE GAC.
3. ALL PROCESS PIPING SHALL BE 3 INCH DIAMETER 304 STAINLESS STEEL UNLESS OTHERWISE NOTED.

Symbol	Description	Date	Approved
1	INTERMEDIATE (60%) DESIGN	12/02/03	
0	PRELIMINARY (30%) DESIGN	08/20/03	

Revisions

Designed By: CW
Drawn By: HW
Checked By: CL
Reviewed By: JT
Date: 12/02/03
File No. 47118.0130
Drawing CADD Name: GP-5
Contract Number:

UNITED STATES ENVIRONMENTAL PROTECTION AGENCY

BLACK & VEATCH Special Projects Corp.

GROUNDWATER EXTRACTION AND TREATMENT SYSTEM DESIGN STANDARD CHLORINE OF DELAWARE

TREATMENT SYSTEM P & ID

Sheet Reference Number:

GP-5